Tourney TZ Shifting Lever

SL-TZ500 (3x6/7-speed)

For Left Hand

SL-TZ500-LN

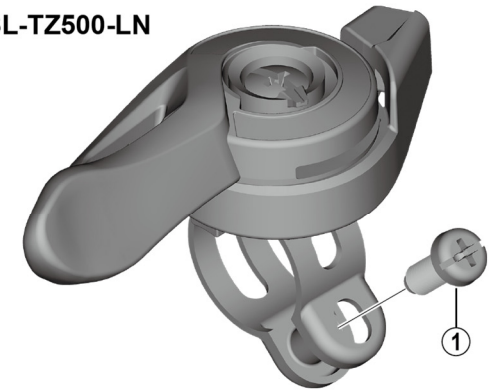

For Right Hand

SL-TZ500-6R
SL-TZ500-7R

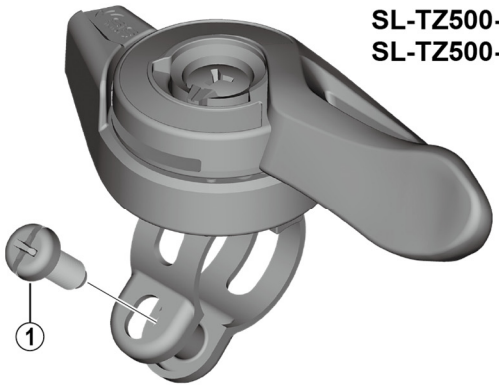

ITEM NO.	**SHIMANO CODE NO.**	DESCRIPTION
1	**Y00011130**	Clamp Screw (M5 x 12)

Jul.-2017-4214

© Shimano Inc. I

Specifications are subject to change without notice.

SHIMANO