SHIMANO
SHIMANO (EUROPA) GmbH.
Kleinhülsen 1-3 4010 Hilden,
West Germany Tel. 02103-5005-0
SHIMANO AMERICAN CORPORATION
One Shimano Drive, Irvine, California
U.S.A. 92718 Tel. (714) 951-5003

Small parts list for after market.

- *You may photocopy this sheet and use it as an order form.*
- *Sie können dieses Blatt kopieren und als Bestellformular verwenden.*
- *Vous pouvez photocopier cette feuille et l'utiliser comme bon de commande.*
- *Dit blad kan gecopieerd en als bestelformulier gebruikt worden.*
- *Potete fotocopiare questo foglio e usarlo come modulo di commissione.*

BR-A500-49 Caliper Brake EXAGE 500EX / 49-Type
BR-A500-57 Caliper Brake EXAGE 500EX / 57-Type

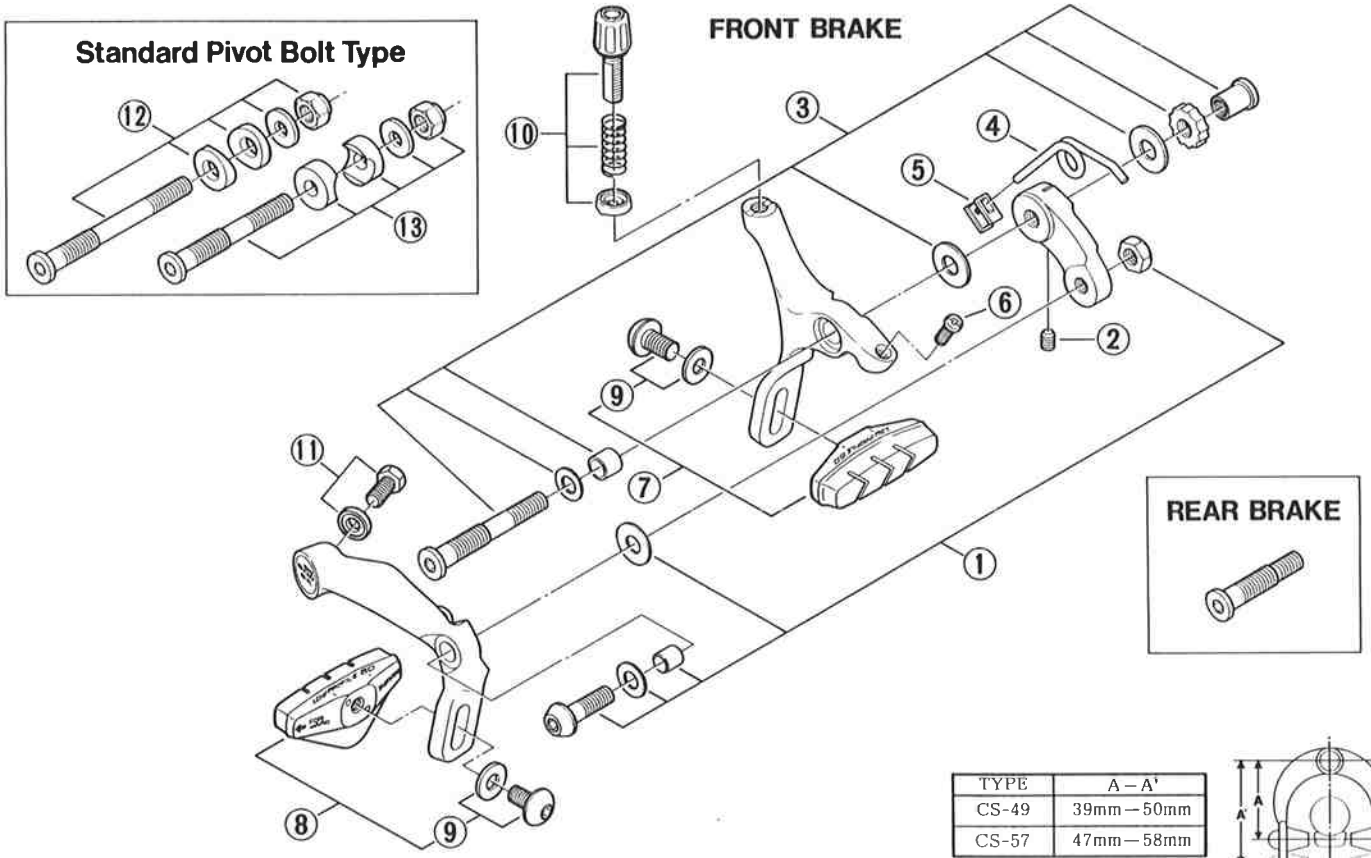

TYPE	A – A'
CS-49	39mm – 50mm
CS-57	47mm – 58mm

NOTE: "Right" and "Left" as seen from the riding position.

	Q'TY	ITEM NO.	PART NO.	DESCRIPTION
		1	82B 9801	Arm Bolt Unit (M6x23.5)
		2	884 1400	Stopper Screw
		3	81U 9805	Pivot Bolt Assembly 50.4mm for Front
			81U 9806	Pivot Bolt Assembly 35.7mm for Rear
		4	81U 0900	Arm Return Spring for 49-Type
			81U 0920	Arm Return Spring for 57-Type
		5	81U 1700	Sleeve for 49-Type
			81J 1200	Sleeve for 57-Type
		6	81U 1000	EC-Screw (M4x11) for 49-Type
			81U 1010	EC-Screw (M4x12.5) for 57-Type
		7	———	Brake Shoe Assembly A (Right side for front brake or rear brake)
		8	———	Brake Shoe Assembly B (Left side for front brake or rear brake)
		7&8	82A 9901	Brake Shoe Assembly (5pair on card)
		9	82A 9804	Shoe Fixing Bolt (M6x11.2) & Washer
		10	81U 9803	Cable Adjusting Bolt Unit
		*11	81U 9807	Cable Fixing Bolt (M5x15) & Washer
		12	82B 9803	Standard Pivot Bolt Unit 69.9mm for Front
		13	82B 9808	Standard Pivot Bolt Unit 52.9mm for Rear

Printed in Japan 9002-1037B