(English)

UM-3K70A-002

# User's Manual

# Rear Derailleur (Di2)

https://si.shimano.com

## Contents

IMPORTANT NOTICE ..... 3
Important safety information ..... 4
Notice ..... 6
FCC ..... 8
Regular inspections before riding the bicycle ..... 9
Names of parts ..... 10
Installing / removing the battery (RD-M9250) ..... 11
Before installing/removing the battery ..... 11
Removal method ..... 12
Installation procedures ..... 13
Charging the Di2 battery ..... 14
Switching modes ..... 15
Switching operation modes ..... 15
Low power consumption mode (RD-M9250) ..... 17
Wireless connection ..... 18
Pairing with a Di2 shift switch ..... 18
Cycle computer connection ..... 19
Connecting with a smartphone ..... 20
Downloading the application ..... 21
Specifications ..... 22
Troubleshooting ..... 23

# IMPORTANT NOTICE

- Contact the place of purchase or a distributor for information on installation, adjustment, and replacement of the products which are not found in the user's manual. A dealer's manual for professional and experienced bicycle mechanics is available on our website ( https://si.shimano.com ).
- Do not disassemble or modify the product.
- Please observe the appropriate rules and regulations of the country, state or region in which you conduct your business as a dealer.
- The Bluetooth ® word mark and logos are registered trademarks owned by the Bluetooth SIG, Inc. and any use of such marks by SHIMANO INC. is under license. Other trademarks and trade names are those of their respective owners.
- ANT ® and ANT+ ® are trademarks or registered trademarks of ANT Wireless.

| | |
|---|---|
| | For safety, be sure to read this user's manual thoroughly before use, and follow it for correct use. |

| | |
|---|---|
| DANGER | Failure to follow the instructions will result in death or serious injury. |
| WARNING | Failure to follow the instructions could result in death or serious injury. |
| CAUTION | Failure to follow the instructions could cause personal injury or physical damage to equipment and surroundings. |

# Important safety information

| | |
|---|---|
| ⚠ | Consult your place of purchase or a distributor regarding items requiring replacement. |
| ⚠ | Be sure to observe the following instructions in order to avoid burns or other injury from fluid leakage, overheating, fire, or explosion. |

## ⚠ DANGER

- Do not heat the battery or expose it to flames. If this is not observed, combustion or bursting of the battery may occur.
- Do not use or leave the battery in hot and humid places such as where the battery is exposed to direct sunlight, in a closed vehicle on a hot day, or near a heater. If this is not observed, leakages, overheating or bursting may cause fire, burns or other injury to occur.
- Do not deform, modify, disassemble, or apply solder directly to the battery. If this is not observed, leakages, overheating or bursting may cause fire, burns or other injury to occur.
- Do not touch the metal terminals with metal items such as hairpins. If this is not observed, short circuits, overheating, burns or other injuries may occur.

## ⚠ WARNING

- Do not disassemble or modify the product. This may cause the product to not operate correctly, and you may suddenly fall and be seriously injured.
- Do not place this product in water or sea water, and do not allow the terminals to get wet. If this is not observed, fire, bursting, ignition, or overheating may occur.
- Do not throw or subject this product to strong shocks. If this is not observed, bursting, overheating or problems with operation may occur.
- Do not use the battery if leakages, discoloration, deformation or any other abnormalities occur. If this is not observed, bursting, overheating or problems with operation may occur.
- Clean the chain and QUICK-LINK with an appropriate chain cleaner regularly. Intervals between maintenance depend on the use and riding circumstances. Never use alkali- or acid-based solvents such as rust cleaners. If those solvents are used the chain or QUICK-LINK might break and cause serious injury.
- Check the chain for any damage (deformation or cracking), skipping, or other abnormalities such as unintended gear shifting. If any problems are found, consult your place of purchase or a distributor. The chain may break, and you may fall.
- Use only the batteries specified. Using an incorrect battery may cause the battery to burst or leak fluid, resulting in fire, injury, or defacement in the surrounding area.

## ⚠ CAUTION

- Store in a safe place out of the reach of small children to avoid letting them swallow by mistake.

- Do not let grease adhere to the metal terminals. A conduction failure may result.
- Do not perform maintenance with the PC connected using an electric wire.

# Notice

- If gear shifting operation does not feel smooth, consult the place of purchase for assistance.
- If the chain keeps skipping during use, replace the gears and chain at the place of purchase.
- If there is a large amount of excess play in the pulleys and extra noise is generated while riding, replace the pulleys at your place of purchase.
- If you stop rotating the pedal while traveling at high speed, a sound may be emitted between the chain and cassette.
- The electric wire has small waterproof connectors, so do not repeatedly connect and disconnect it too often. Doing so may impair the waterproofing.
- The components are designed to be fully waterproofed to withstand wet weather riding conditions; however, do not deliberately place them into water.
- The gears should be periodically washed with a neutral detergent then lubricated. In addition, cleaning the chain and QUICK-LINK with a neutral detergent and lubricating them can be an effective way of extending the life of the chain and QUICK-LINK.
- Do not use the thinners or harsh solvents to clean the products. Such solvents may damage the surface.
- Do not clean the bicycle with a high-pressure wash. If water gets into any of the components, operating problems or rusting may result.
- Wash the bicycle with the battery installed. If you wash the bicycle with the battery removed, water or dirt may adhere to the terminals, which can cause malfunction.
- Contact the place of purchase for updates of the component firmware. The most up-to-date information is available on the SHIMANO website.
- Be careful not to get water into the terminals of the battery case and E-TUBE port.
- Handle the components carefully, and avoid subjecting them to strong shock.
- Disconnect the connection between E-TUBE PROJECT Cyclist and the rear derailleur when not using E-TUBE PROJECT Cyclist. The rear derailleur does not shift gears when connected to E-TUBE PROJECT Cyclist.
- 2.4 GHz digital wireless

  This product adopts digital communication technologies in the 2.4 GHz frequency, which are used for wireless LAN, etc. It may receive interference in the following locations or environments that prevent wireless communication from being performed correctly:

  - Near a device such as a television, computer, radio, or motor, or inside an automobile or railway car
  - Near a railway crossing or railway track, television transmitting station, or radar base, etc.
  - When using the device in combination with another cordless device or some lights
- When not using Bluetooth ® LE or the ANT ® function, wireless communication function can be disabled. For the setting procedure, refer to the user's manual for E-TUBE PROJECT Cyclist.

  **E-TUBE PROJECT Cyclist:**

  https://si.shimano.com/um/7J4MA/other_settings#task_ynb_fww_1mb
- If the ambient temperature is low, the battery's usable time will be shorter.

- Store this product or the bicycle with this product installed in a cool indoor location away from direct sunlight and rain. If the storage temperature is too low or too high, the performance of the battery is reduced, and its usable time will be shorter. When you use the battery after a long storage period, make sure to charge it first.
- When the battery is completely depleted, charge it as soon as possible. If you leave the battery without charging it, it will cause the battery to deteriorate.
- The battery is an exhaustible item. The battery will gradually lose its capacity to charging after repeated use. If the length of time that the battery can be used and its traveling distance become extremely short, contact the place of purchase.
- Products are not guaranteed against natural wear and deterioration from normal use and aging.
- For maximum performance we highly recommend SHIMANO lubricants and maintenance products.
- Open source software

  The open source software used in this product is available at the following URL:

  https://si.shimano.com/compliance/oss

# FCC

This device complies with part 15 of the FCC Rules. Operation is subject to the following two conditions:

(1) This device may not cause harmful interference, and (2) this device must accept any interference received, including interference that may cause undesired operation.

# Regular inspections before riding the bicycle

Before riding the bicycle, check the following items. If any problems are found, consult your place of purchase or a distributor.

- Are the fastening sections fixed securely?
- Is there sufficient charge remaining in the battery?
- Is there any noticeable damage to the electric wires?
- Is gear shifting carried out smoothly?
- Has excess play increased in the links?
- Has excess play increased in the pulleys?
- Are there any abnormal noises coming from the derailleur?
- Has the chain become elongated?
- Is there any noticeable damage on the chain?

# Names of parts

## RD-M9250

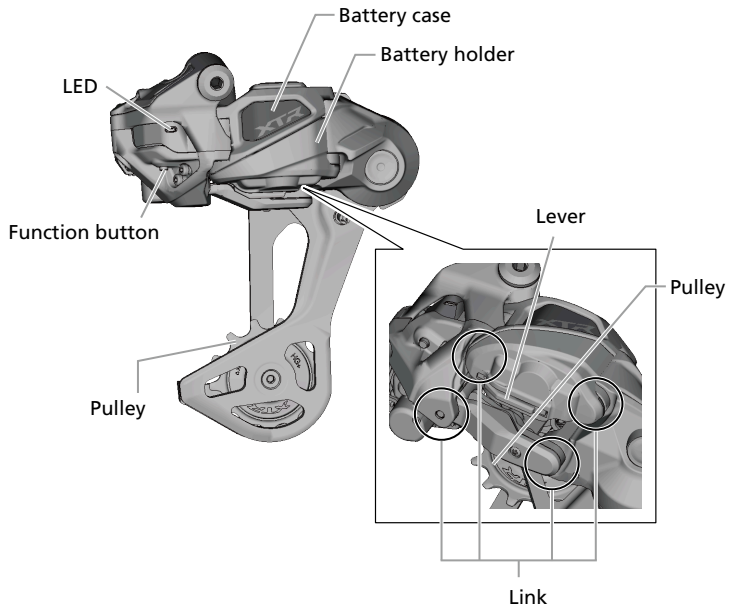


## RD-M9260

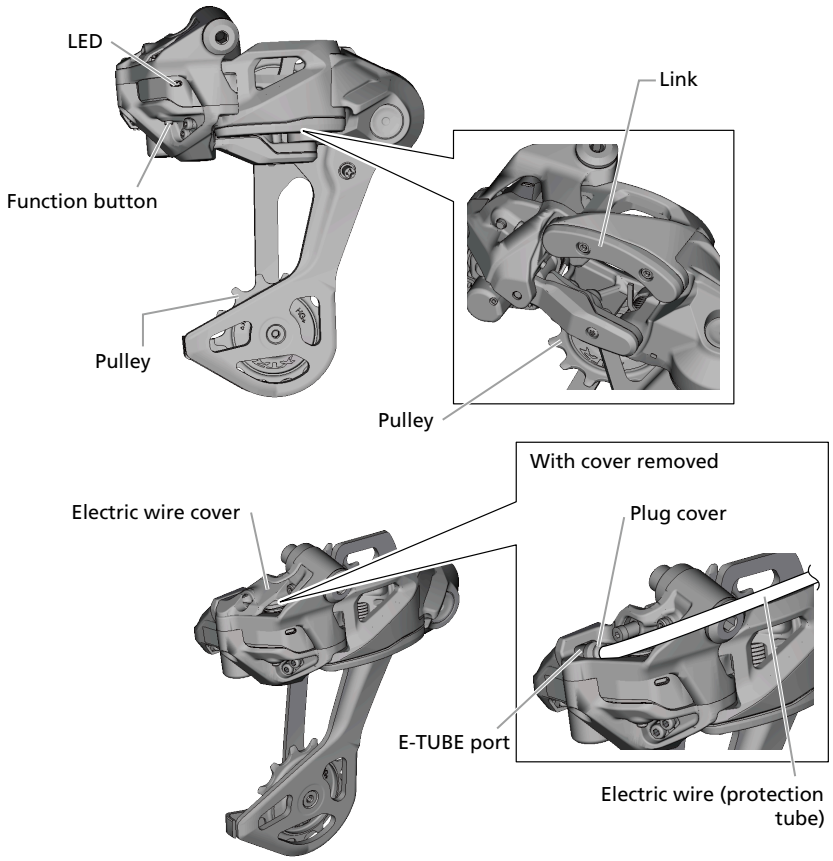


* Fully understand the precautions for use before using the product.

# Installing / removing the battery (RD-M9250)

## Before installing/removing the battery

- When installing/removing the battery, move to an area well away from sources of water (such as rivers, lakes, the ocean, or ditches).
- Do not perform this task in locations with a lot of water or mud, such as outdoors during rain or car washing facilities. If not observed, problems with operation may occur.
- Do not perform this task in areas with a lot of sand or dust in the air. If not observed, problems with operation may occur.
- Before connecting the battery, make sure that the area where the battery will be connected (terminal) is dry and not dirty.
- If there is any dirt or sand on the battery terminals, gently wipe it away with a soft, dry cloth.
- When performing this task with your hands, clean your hands and remove all water and dirt before performing this task.
- Static electricity can damage electronic components. Discharge static electricity from your body before performing this task.

# Removal method

1. **Slide the battery holder out to remove it, while pulling the lever in the direction of the arrow.**

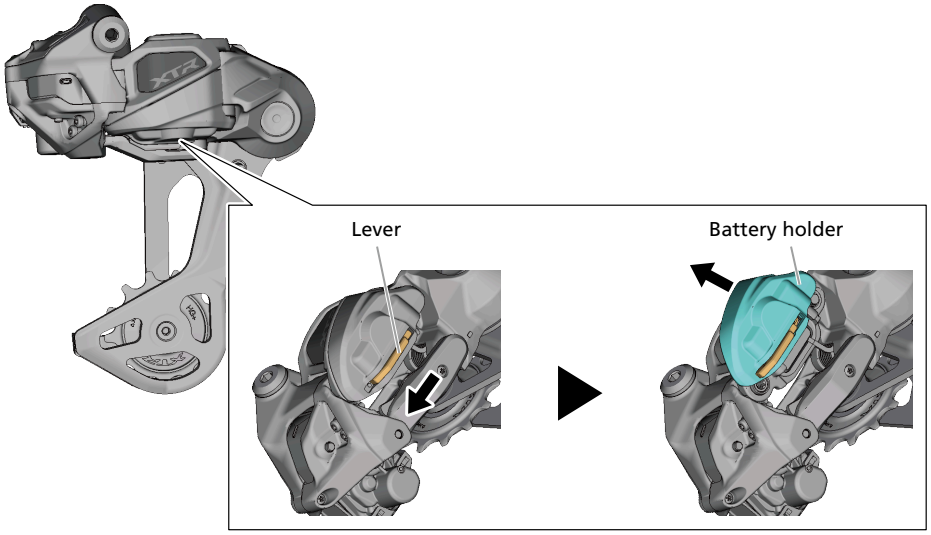


2. **Remove the battery from the rear derailleur.**

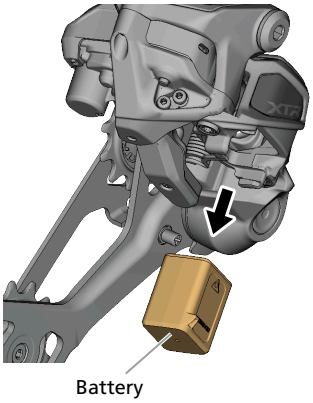

# Installation procedures

1. **Install the battery to the rear derailleur, with the triangle mark of the battery facing outward, as indicated in the figure.**

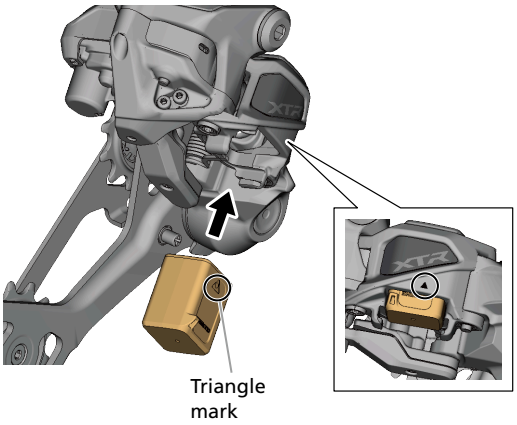


2. **Install the battery holder.**

   Align the rails of the battery holder and rear derailleur, and slide the battery holder in. Then, push it in firmly until you feel a click.

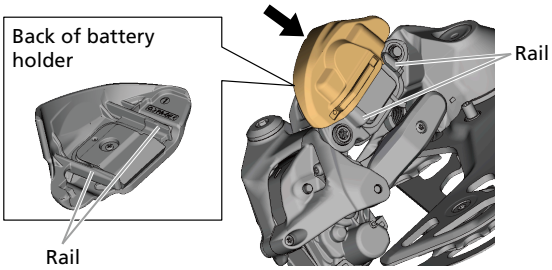


3. **Check that the rear derailleur operates normally.**

**NOTICE**

- After installing the battery holder, check the position of the lever.

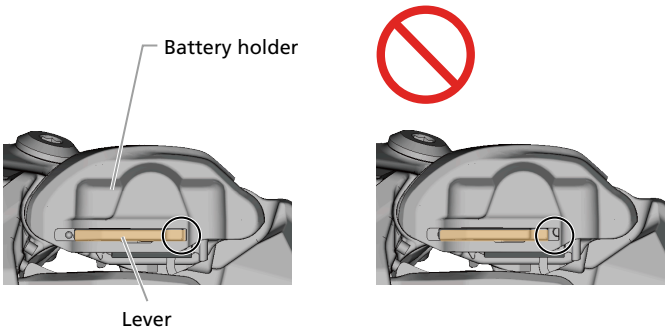

# Charging the Di2 battery

For information on charging the battery, refer to the user's manual for the battery charger .

# Switching modes

## Switching operation modes

The mode and LED state differ according to the rear derailleur used and the E-BIKE system to connect.
For the setting procedure, contact your place of purchase or a distributor.

| System mode | Rear Derailleur | Battery / E-BIKE system to connect |
|---|---|---|
| Di2 system mode | RD-M9250 | BT-DN320 |
| SHIMANO E-BIKE SYSTEMS mode | RD-M9260 | Drive unit of SHIMANO E-BIKE SYSTEMS |
| Non-SHIMANO E-BIKE system mode | | Drive unit of non-SHIMANO E-BIKE system |

### Location of LED

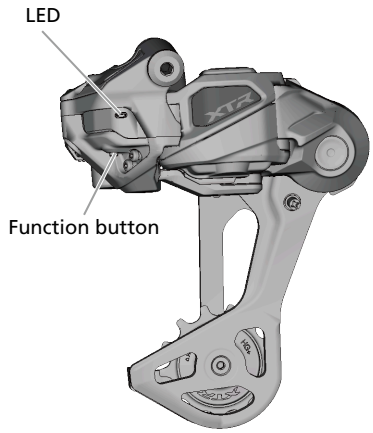


### Di2 system mode

| Action | Function button operation | Current mode | LED | |
|---|---|---|---|---|
| Checking the battery level * | Single-click | Normal mode | ● | Solid green: 51 - 100% |
| | | | ☀ | Flashing green: 26 - 50% |
| | | | ● | Solid red: 1 - 25% |
| | | | ○ | Off: 0% |
| Bluetooth ® LE connection mode | Press and hold (for 0.5 to 1.9 seconds) | | ☀ | Flashing blue |
| Switching to adjustment mode | Press and hold (for 2 seconds or longer) | | ● | Solid yellow |
| Switching to normal mode | Press and hold (for 0.5 seconds or longer) | Adjustment mode | ○ | Off |

* The battery level is also displayed when the battery is installed.
When the battery is completely drained, the derailleurs are fixed at the last gear position.
It is recommended to charge the battery as soon as possible when the LED lights solid red.

### SHIMANO E-BIKE SYSTEMS mode

| Action | Function button operation | Current mode | LED | |
|---|---|---|---|---|
| Switching to adjustment mode | Press and hold (for 2 to 4 seconds) | Normal mode | ● | Solid yellow |
| Switching to automatic gear shifting | Double-click | | ☀ | Flashing green<br>[Auto 1]: Once<br>[Auto 2]: Twice |
| Switching to normal mode | Press and hold (for 0.5 seconds or longer) | Adjustment mode | ○ | Off |

### Non-SHIMANO E-BIKE system mode (EW-EX310 is not mounted)

| Action | Function button operation | Current mode | LED | |
|---|---|---|---|---|
| Bluetooth ® LE connection mode | Press and hold (for 0.5 to 1.9 seconds) | Normal mode | ☀ | Flashing blue |
| Switching to adjustment mode | Press and hold (for 2 to 4 seconds) | | ● | Solid yellow |
| Switching to the mode for canceling pairing with a non-SHIMANO E-BIKE system | Press and hold (for 8 seconds or longer) | | ☀/☀ | Alternates between flashing red and flashing green: In progress |
| | | | ☀ | Flashing green: Deletion successful |
| | | | ☀ | Flashing red: Deletion unsuccessful |
| Switching to normal mode | Press and hold (for 0.5 seconds or longer) | Adjustment mode | ○ | Off |

### Non-SHIMANO E-BIKE (EW-EX310 is mounted)

| Action | Function button operation | Current mode | LED | |
|---|---|---|---|---|
| Bluetooth ® LE connection mode | Press and hold (for 0.5 to 1.9 seconds) | Normal mode | ☀ | Flashing blue |
| Switching to adjustment mode | Press and hold (for 2 to 4 seconds) | | ● | Solid yellow |
| Switching to normal mode | Press and hold (for 0.5 seconds or longer) | Adjustment mode | ○ | Off |

# Low power consumption mode (RD-M9250)

If a certain amount of time elapses since the last time that gear shifting was performed, the RD-M9250 switches to the low power consumption mode and will not accept gear shifting operations.

To perform gear shifting again, operate the shift switch while rotating the crank.

The rear derailleur will operate slightly and gear shifting operations will become possible again.

# Wireless connection

## Pairing with a Di2 shift switch

This product can use an original wireless standard to wirelessly communicate with a compatible shift switch. For details on pairing, refer to the dealer's manual for the rear derailleur or the user's manual for E-TUBE PROJECT Cyclist , or contact the place of purchase for information about pairing.

# Cycle computer connection

This product transmits the following information wirelessly to cycle computers or receivers that support ANT ® or Bluetooth ® LE connections:

**(1)** Gear position information (rear)

**(2)** Di2 battery level information *

**(3)** Shift switch battery level information

**(4)** Adjustment mode information

For information on which of the above is displayed, refer to the manual for your cycle computer or receiver.

* Non-SHIMANO E-BIKE system is not supported.

You can check the latest functions by using E-TUBE PROJECT to update the firmware. Please contact your place of purchase for details.

When using the rear derailleur with a non-SHIMANO E-BIKE system where EW-EX310 is not mounted, the rear derailleur cannot be connected with a cycle computer.

For details, refer to the manual for the E-BIKE system you are using.

To connect, the cycle computer needs to be in “connection mode.” For information on how to put the cycle computer into connection mode, refer to the manual for your cycle computer.

1. **Put the cycle computer into connection mode.**
2. **Perform gear shifting operations.**
3. **Follow the instructions on the cycle computer screen to select the target to connect to.**
4. **Connection is complete.**

   Check with your cycle computer if connection has been successful. If connection cannot be performed in the way described above, refer to the manual for your cycle computer.

# Connecting with a smartphone

E-TUBE PROJECT Cyclist may be used if a Bluetooth ® LE connection is established with a smartphone. Before setting up a connection, turn on Bluetooth ® LE on the smartphone.

**(1)** Start E-TUBE PROJECT Cyclist and set it to listen for Bluetooth ® LE signals.

**(2)** Press the function button until the LED flashes blue. The bicycle side is ready to connect. The unit name is displayed on the E-TUBE PROJECT Cyclist screen.

**(3)** Select the unit name displayed on screen.

* When disconnecting, cancel the Bluetooth ® LE connection from the smartphone. (The bicycle will switch from the connection mode to the normal operation mode.)

# Downloading the application

E-TUBE PROJECT Cyclist must be installed to a smartphone in order to update the firmware and perform customization.

Download E-TUBE PROJECT Cyclist from our support website ( https://bike.shimano.com/e-tube/project.html ).

For information on how to install E-TUBE PROJECT Cyclist, check the support website.

For information on how to operate the application on the smartphone, refer to the user's manual for E-TUBE PROJECT Cyclist or contact the place of purchase.

# Specifications

| | | | |
|---|---|---|---|
| **Operating temperature** | -10°C - 50°C | **Wireless specifications** | ANT ® / Bluetooth ® LE |
| **Frequency band** | 2.4 GHz | | |
| **Maximum output** | < 10 dBm | **Firmware version** | 4.0.0 or later |

# Troubleshooting

Check the following information if you have a problem with the product. If the problem is not covered below or cannot be solved with the indicated method, contact the place of purchase or a distributor.

## Gear shifting

| Details | Causes / possibilities | Remedies |
|---|---|---|
| **Gear shifting is not performed.** | A non-SHIMANO E-BIKE system such as a BOSCH system connected via Bluetooth ® LE may have become disconnected. | Check whether the gear position is displayed on the cycle computer of the non-SHIMANO E-BIKE system such as the BOSCH system. If the gear position is not displayed, restart the E-BIKE system you are using. |
| | | If gear shifting is still not performed after restarting, pairing may not have been performed correctly. Use the tool of the E-BIKE system you are using to perform pairing. For details, refer to the manual for the E-BIKE system you are using. If gear shifting is still not performed, contact the place of purchase. |
| | Has the shift switch been paired? | Pair the shift switch. |
| | Is there sufficient charge remaining in the battery? | Charge the battery and check again. |
| | When using the shift switch wirelessly, gear shifting is not performed when the switch is next operated if a certain amount of time has elapsed since the last time gear shifting was performed. (RD-M9250) | Operate the shift switch again while rotating the crank. The rear derailleur will operate slightly and gear shifting operations will become possible again. |
| | Is there sufficient charge remaining in the battery of the shift switch? | Check the battery level of the shift switch, and replace the battery if insufficient charge remains. |
| | The firmware may be temporarily unable to operate. | Remove the battery, and install it again. |
| **The gear-shifting interval is too long.** | Is there sufficient charge remaining in the battery? | Charge the battery and check again. |

## Others

| Details | Causes / possibilities | Remedies |
|---|---|---|
| **The LED flashes red while performing gear shifting operations.** | The Di2 battery level may be too low to perform operations. | Charge the Di2 battery and check again. If the problem is not resolved, contact the place of purchase. |

| | |
|---|---|
| | This symbol on your product, literature, or packaging reminds you that this product must be taken to separate collection at the end of its working life. Do not dispose of this product as unsorted municipal waste but instead take it for recycling. By ensuring the product is disposed of correctly, you will help to prevent potential negative consequences for the environment and human health. For info on your nearest recycling point, check with your local waste authority. |

| | |
|---|---|
| | **Disposal information for countries outside the European Union**<br>This symbol is only valid within the European Union. Follow local regulations when disposing of used batteries. If you are not sure, consult the place of purchase or a distributor. |

**SHIMANO NORTH AMERICA BICYCLE, INC.**
One Holland, Irvine, California 92618, U.S.A. Phone: +1-949-951-5003

**SHIMANO EUROPE B.V.**
High Tech Campus 92, 5656 AG Eindhoven, The Netherlands Phone: +31-402-612222
Only EU General Contact : contactshimano@shimano-eu.com

**MADISON (A DIVISION OF H.YOUNG (OPERATIONS) LTD)**
Roebuck Way, Knowlhill, Milton Keynes, Buckinghamshire, MK5 8HL, United Kingdom

**SHIMANO INC.**
3-77 Oimatsu-cho, Sakai-ku, Sakai City, Osaka 590-8577, Japan

Please note: specifications are subject to change for improvement without notice. (English)

© May 2025 by SHIMANO INC. ITP