SHIMANO Nexus



INTER5 E

SERVICE MANUAL

SG-C7000-5V
SG-C7000-5R
SG-C7000-5C
SG-C7000-5D
SG-C7010-5D

SG-C7050-5V
SG-C7050-5R
SG-C7050-5C
SG-C7050-5D
SG-C7060-5D

Ver.1.8
©Jun. 2026 by Shimano Inc. ITP

CONTENTS

Introduction of INTER-5E 2

Dealer's Manual 4

SG-C7000-5V, SG-C7000-5R, SG-C7000-5C, SG-C7000-5D
- INSTALLATION/REMOVAL
- ADJUSTMENT
- MAINTENANCE

SG-C7050-5V, SG-C7050-5R, SG-C7050-5C, SG-C7050-5D
- INSTALLATION
- CONNECTION OF THE ELECTRIC WIRES
- MAINTENANCE

SG-C7010-5D
- INSTALLATION/REMOVAL
- ADJUSTMENT
- MAINTENANCE

SG-C7060-5D
- INSTALLATION/REMOVAL
- MAINTENANCE

Troubleshooting 102

Disassembly & Assembly 106

Required Tools & Parts
Replacing the Internal Assembly
Disassembling the Internal Assembly
Assembling the Internal Assembly

Disassembly & Assembly (SG-C7010-5D/SG-C7060-5D) 128

Required Tools & Parts
Replacing the Internal Assembly
Disassembling the Internal Assembly
Assembling the Internal Assembly

Service Parts & Tools 154

Cassette Joint
Measurement Tool
Motor unit
Lock ring tool
NEXUS non-turn washers

Hub dimensions (Over Locknut Dimensions and Axle) 157

EV / Spare Parts List 161

SHIMANO Nexus INTER 5 E

E-BIKE Dedicated Internal Geared Hub

E-BIKE DESIGN

The NEXUS Inter-5E is a revolutionary internal geared hub designed specifically for the unique demands of E-BIKE riding. It can withstand much higher pedaling forces, even while shifting (+180% compare with SG-C6000 series) by optimizing shift pattern design.

It also offers a gear range with optional automatic shifting.* Automatic shifting offers a stress-free ride, eliminating the need for the rider to worry about whether they're in the right gear or have to change gears after an abrupt stop.

*Only when used on E-BIKE

5-SPEED MECHANICAL SHIFTING



SG-C7000-5C

SG-C7000-5V
For Rim Brake (5-speed)

SG-C7000-5R
For Roller Brake (5-speed)

SG-C7000-5C
For Coaster Brake (5-speed)

SG-C7000-5D
For Disc Brake (5-speed)

SM-C7000-5
Small Parts Set for SG-C7000-5

SG-C7010-5D
For Disc Brake (5-speed)

SM-SG001
Internal Geared HUB PARTS for SG-C7010-5

5-SPEED ELECTRIC SHIFTING

SYNCHRONIZED SHIFT DI2



SG-C7050-5C

SG-C7050-5V
For Rim Brake (5-speed)

SG-C7050-5R
For Roller Brake (5-speed)

SG-C7050-5C
For Coaster Brake (5-speed)

SG-C7050-5D
For Disc Brake (5-speed)

SM-C7050-5
Small Parts Set for SG-C7050

SG-C7060-5D
For Disc Brake (5-speed)

SM-SG001
Internal Geared HUB PARTS for SG-C7060-5

SPECIFICATION

- **Gear ratio : 263%**
- **O.L.D. : 135mm**
- **Color options : Black, Silver**
- **Compatible with GATES belt drive**

*Except coaster brake spec.
*The Belt Drive specification is designed to not interfere with the belt drive.

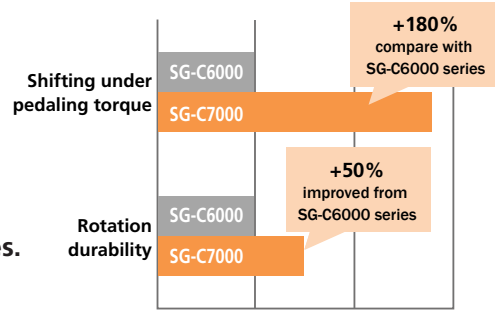

FEATURES

- **Shifting under pedaling torque: +180% compare with SG-C6000 series.**
- **Rotation durability: +50% improved from SG-C6000 series.**

SUITABLE GEAR RANGE & GEAR RATIOS FOR E-BIKE

This provides the same wide gear range as NEXUS Inter-8. Use of 38T for the front and 27T for the rear is recommended.

* The overall gear ratio of a bicycle (distance per crank rotation) with an internal geared hub is obtained by multiplying the internal geared hub gear ratio by the sprocket ratio.

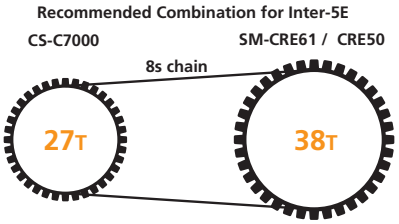

1.3-1.5 sprocket ratio is recommended in combination with E-BIKE.

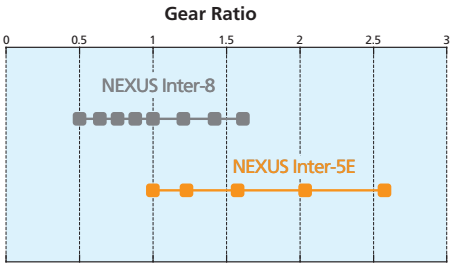

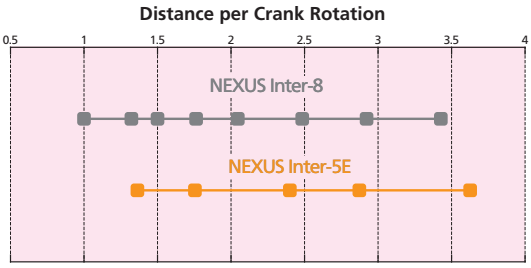

*When tire sizes are 28 inch, sprocket ratio is 2.1 (Inter-8) / 1.4 (Inter-5E).

AUTOMATIC SHIFT

DI2 compatible Inter-5E with SHIMANO STEPS E6100 series and E5000 series offer full automatic shifting. The SHIMANO STEPS system automatically selects and shifts into the optimum gear, based on the number of crank rotations and speed.
Also, riders can always manually shift into the gear they want, even in auto mode. When they do, the SHIMANO STEPS system uses **a learning function** to recognize the manual shift operation and automatically fine-tunes future automatic shift timing to the rider's liking. This offers a stress-free ride, eliminating the need for the rider to worry about whether they're in the right gear or have to change gears after an abrupt stop.

SYNCHRONIZED SHIFT

SHIMANO STEPS computer-assisted shifting system provides a more responsive and stable shifting performance. This innovative system monitors rider's motion and determines the optimal timing to momentarily decrease power to the pedal-assist motor. The temporary reduction of chain tension allows the gear movement of drive train to function smoothly and unimpeded.

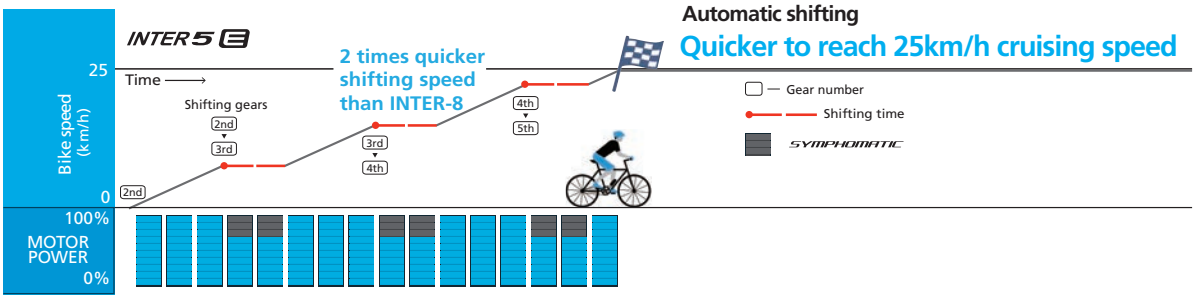

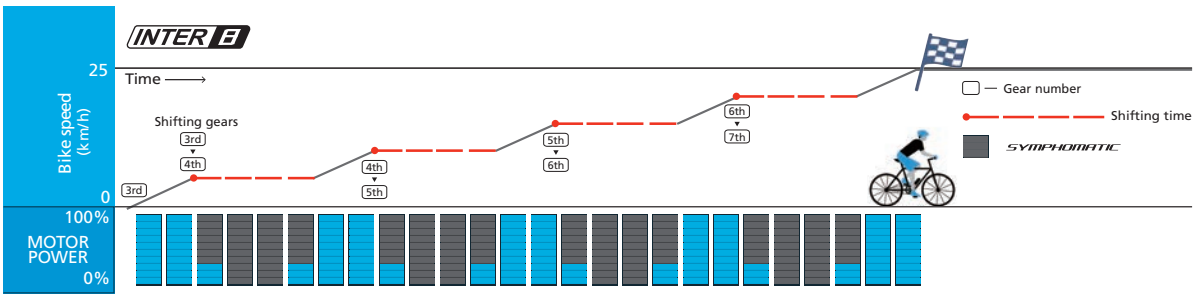

INTER 5 E

Dealer's Manual

SG-C7000-5V
SG-C7000-5R
SG-C7000-5C
SG-C7000-5D

INSTALLATION/REMOVAL

Installing the sprocket (without chain guard)

1. Install the right-hand dust cap, then secure the sprocket with the snap ring.

Check the type, and note the orientation of the right-hand dust cap and sprocket when installing them.

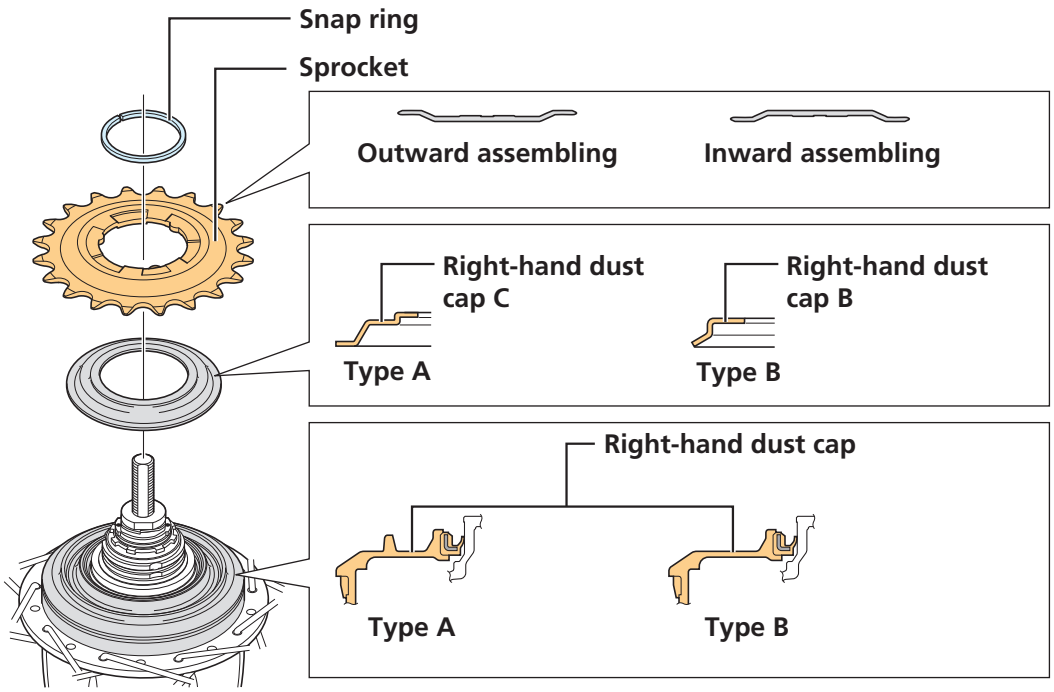

NOTICE

• Note the orientation of the sprocket and right-hand dust cap.

Type	Applicable sprockets	
	Outward assembling	Inward assembling
A	16-23T	20-23T
B	16-23T	
INTER-5E	24T, 27T, 30T	24T, 27T, 30T

Type A
If the sprocket is an inward assembling sprocket with 19T or fewer or for belt drive type, right-hand dust cap A will come into contact with the chain or pulley so type B should be used instead.

Type B
If the sprocket is an inward assembling sprocket with 16T and 3 mm teeth or for belt drive type, remove right-hand dust cap B before use.

Installing the sprocket (with chain guard)

1. Install the chain guard and right-hand dust cap.

Note the orientation of the right-hand dust cap when installing it.

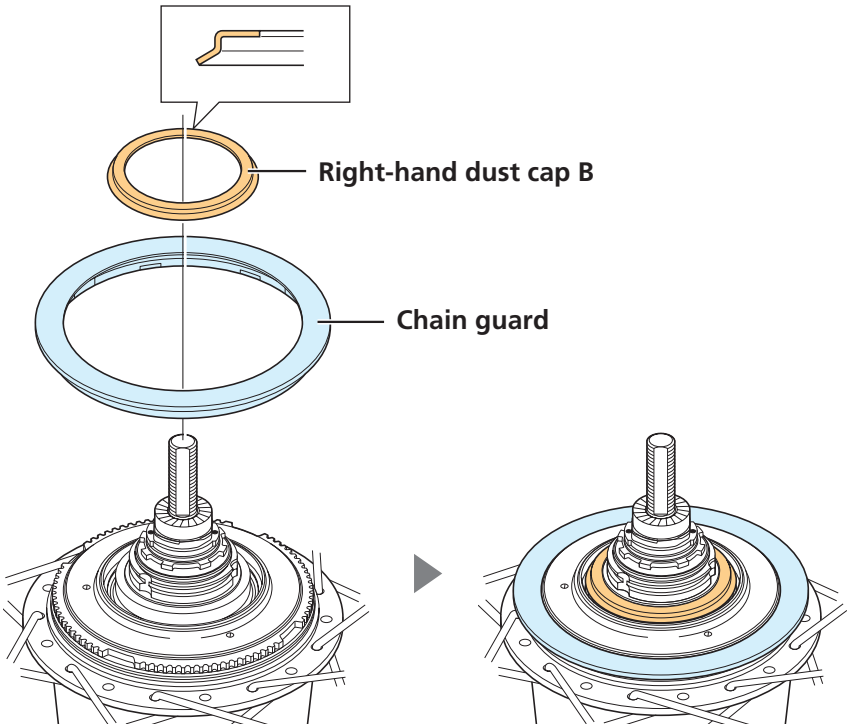

2. **Install the sprocket with the guard plate facing outward, and secure it in place with the snap ring.**

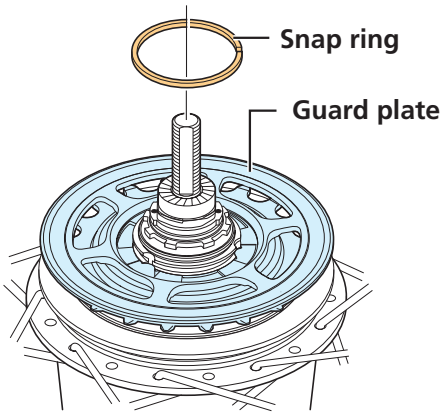

Installation of the cassette joint to the hub

1. **Install the driver cap.**

Note the orientation of the driver cap.

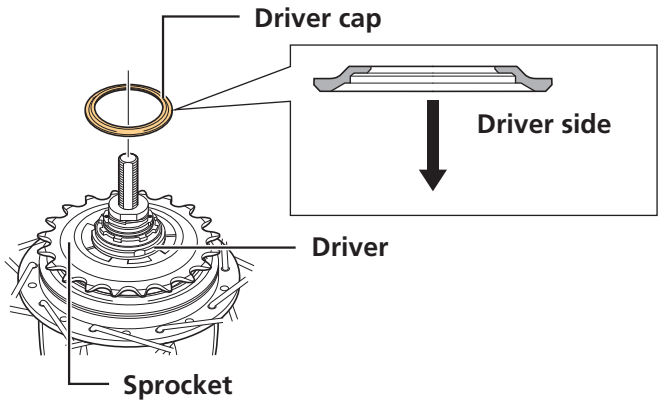

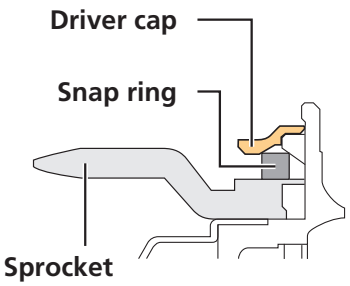

2. Turn the pulley to align the mark (red or yellow) of the cassette joint, and install to the hub body.

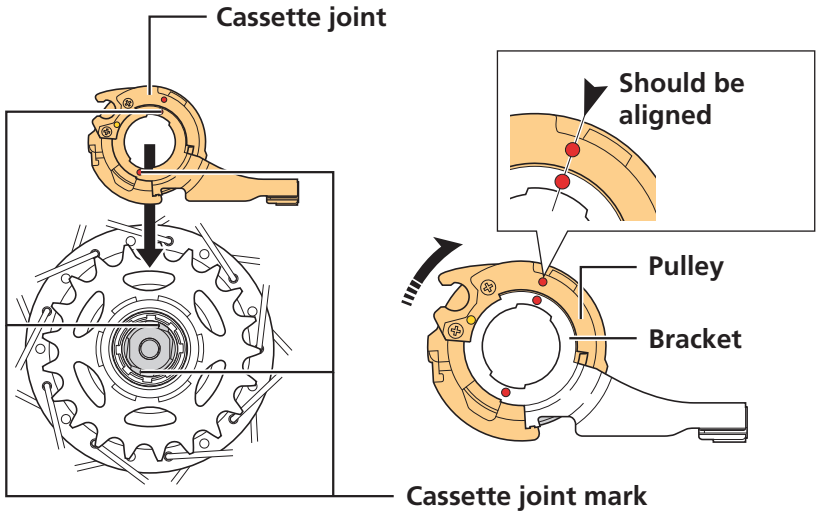

3. Turn the cassette joint mounting ring 45° clockwise to secure it.

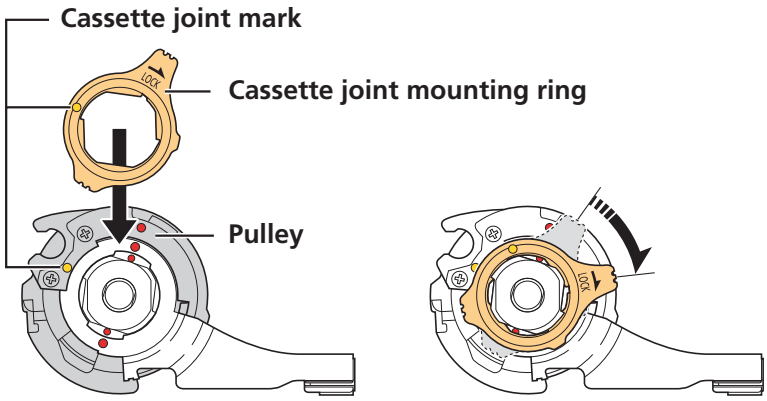

NOTICE

- Hold down the cassette joint bracket securely when performing work.

Installing the disc brake rotor

⚠ CAUTION

- Wear gloves when handling the disc brake rotor. Failure to do so may result in cuts to your hands.

CENTER LOCK type

1. Secure the disc brake rotor as shown in the figure.

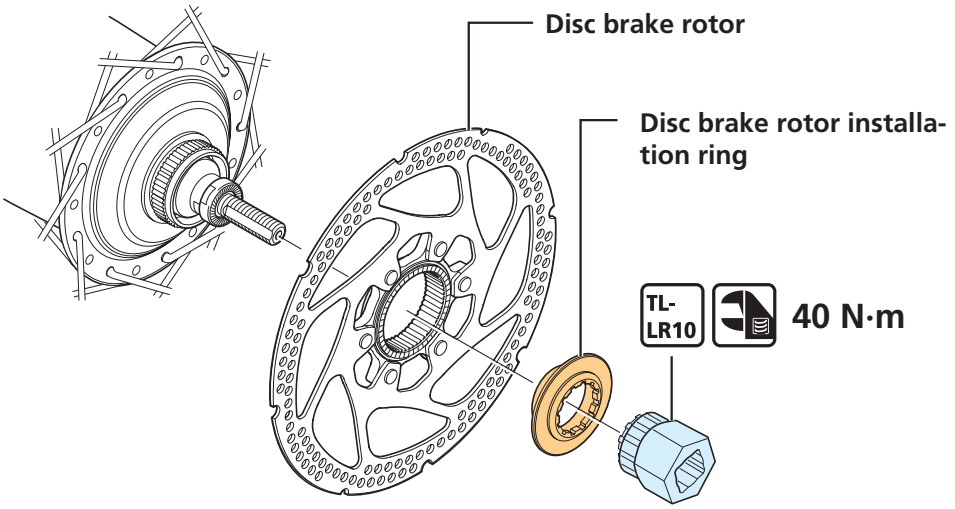

5 screw type (with lock washers)

1. Temporarily secure the disc brake rotor and the disc brake rotor lock washers to the hub as shown in the figure.

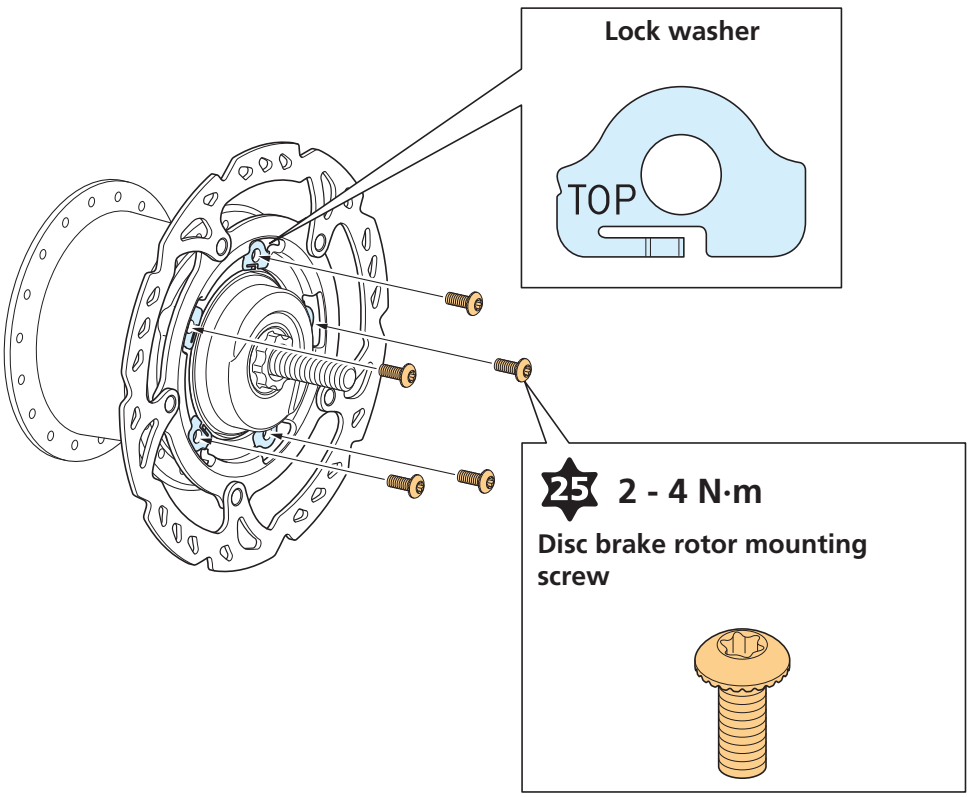

NOTICE

- Fit the lock washers so that the marking "TOP" is visible.
- Ensure that the hooked part of the lock washer is securely caught on the notch in the disc brake rotor, then tighten on the lock washer with the disc brake rotor mounting screw. If tightened while the hooked parts are against the surface of the disc brake rotor, the lock washers and its hooked parts will become deformed.

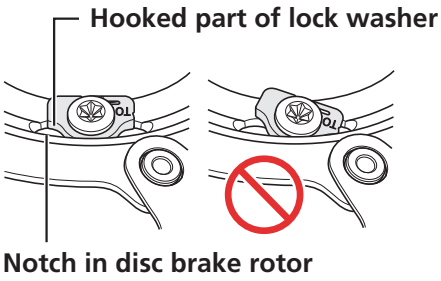

- The lock washers are not reusable. Always use new lock washers when installing the disc brake rotor.
- Use the dedicated disc brake rotor mounting screws.

2. Secure the disc brake rotor with force applied in the clockwise direction.

Tighten the disc brake rotor mounting screws in the order shown in the figure.

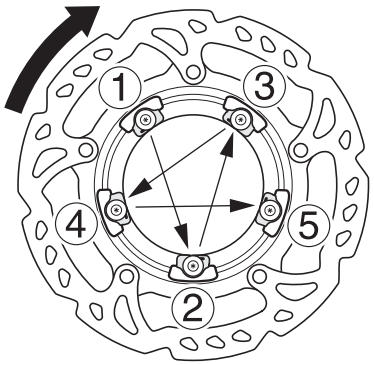

Installing the INTER M brake to the hub body

1. Engage the splines on the hub body with the splines on the INTER M brake, then temporarily tighten with the brake unit fixing nut or the brake unit fixing washer.

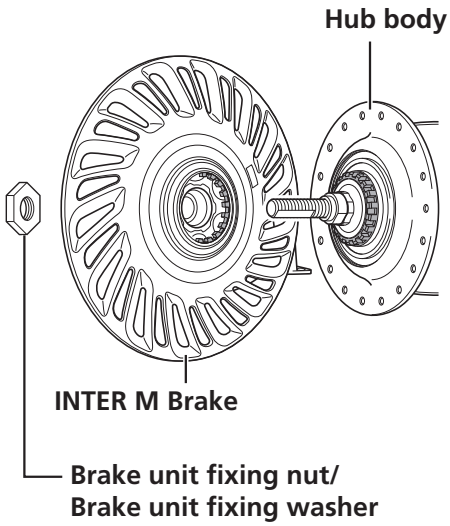

Installation of the hub to the frame

1. Mount the chain on the sprocket, then set the hub axle into the rear dropout.

When not using chain tensioner

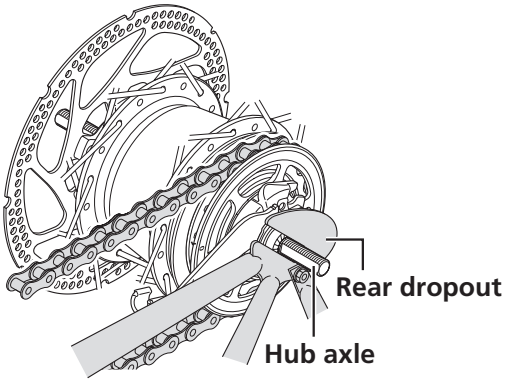

When using chain tensioner

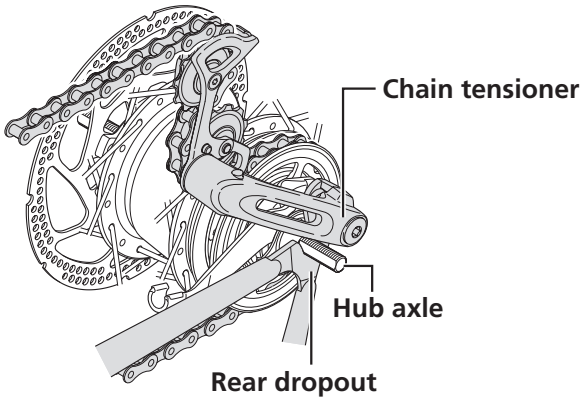

TECH TIPS

- When using the chain tensioner, be sure to read the attached instruction manual for the CT-S500 chain tensioner.

2. Place non-turn washers onto the right and left of the hub axle.

Turn the cassette joint so that the protrusions of the non-turn washers fit into the grooves in the rear dropouts and align the joint to be installed almost parallel to the chainstay.

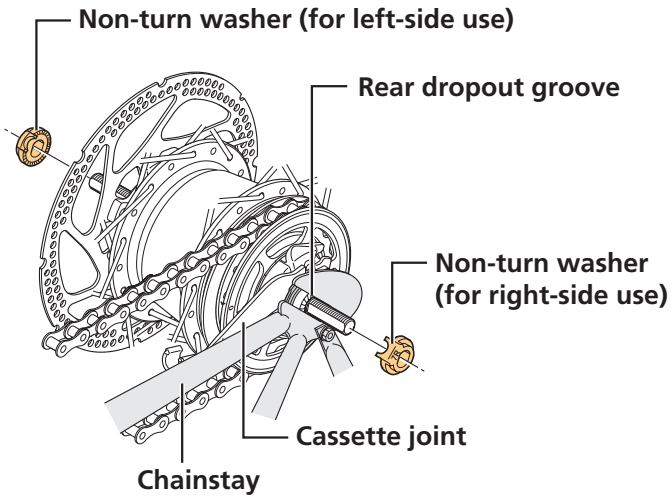

NOTICE

- When installing parts such as a mudguard stay to the hub axle, install them in the order shown in the figure.

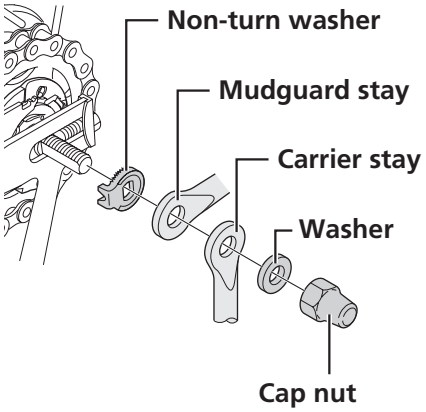

- When installing the hub to the frame, the chain guard may come off. Make sure that the chain guard is securely installed. If not properly installed, noise may be generated.

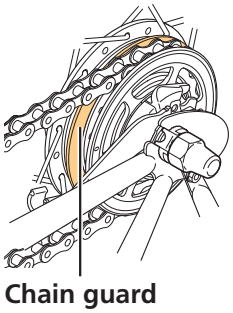

TECH TIPS

- Use a non-turn washer that matches the shape of the rear dropout. Different non-turn washers are used for the left and right sides.

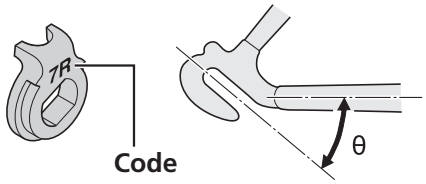

Rear dropout	Non-turn washer		
	Mark / Color		Size
	Right type	Left type	
Standard	5R / Yellow	5L / Brown	$\theta \leq 20°$
	7R / Black	7L / Gray	$20° \leq \theta \leq 38°$
	9R / Light green	9L / Light brown	
Reversed	6R / Silver	6L / White	$\theta = 0°$
Reversed (full chain case)	5R / Yellow	5L / Brown	$\theta = 0°$
Vertical	8R / Blue	8L / Green	$\theta = 60° - 90°$

* Vertical: Does not include the coaster type.

- If the hub nuts are cap nuts, use a frame with rear dropouts that are at least 7 mm thick.

3. Secure with the cap nut.

In the case of INTER M brake type (brake unit fixing washer)

(1) Check that the INTER M brake is securely installed with the brake unit fixing washer.

(2) Attach the brake arm to the chainstay with the arm clip.

(3) Temporarily fix the clip bolt and clip nut by lightly tightening them.

(4) Take up slack in the chain and secure the wheel to the frame with the cap nut.

(5) Attach the brake arm with the arm clip.

(6) Securely install with the cap nut.

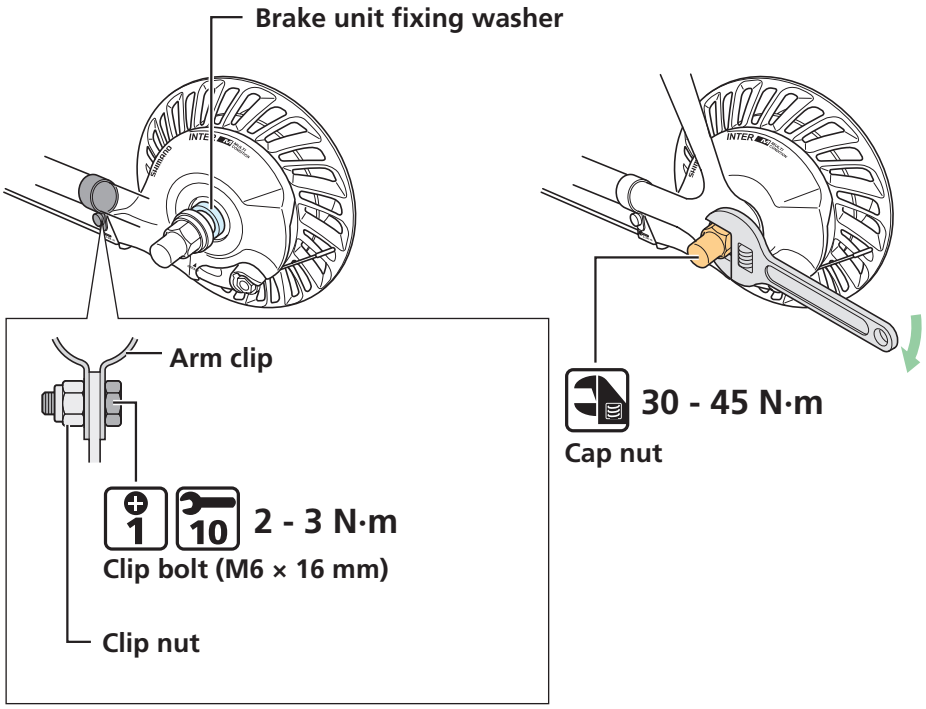

In the case of INTER M brake type (brake unit fixing nut)

(1) Attach the brake arm to the chainstay with the arm clip.

(2) Temporarily fix the clip bolt and clip nut by lightly tightening them.

(3) Take up slack in the chain, align the wheel with the frame center, and temporarily secure it with the cap nut.

(4) Slightly loosen the cap nut, and fully tighten the brake unit fixing nut.

(5) Take up slack in the chain, align the wheel with the frame center, and secure it with the cap nut.

(6) Attach the brake arm with the arm clip.

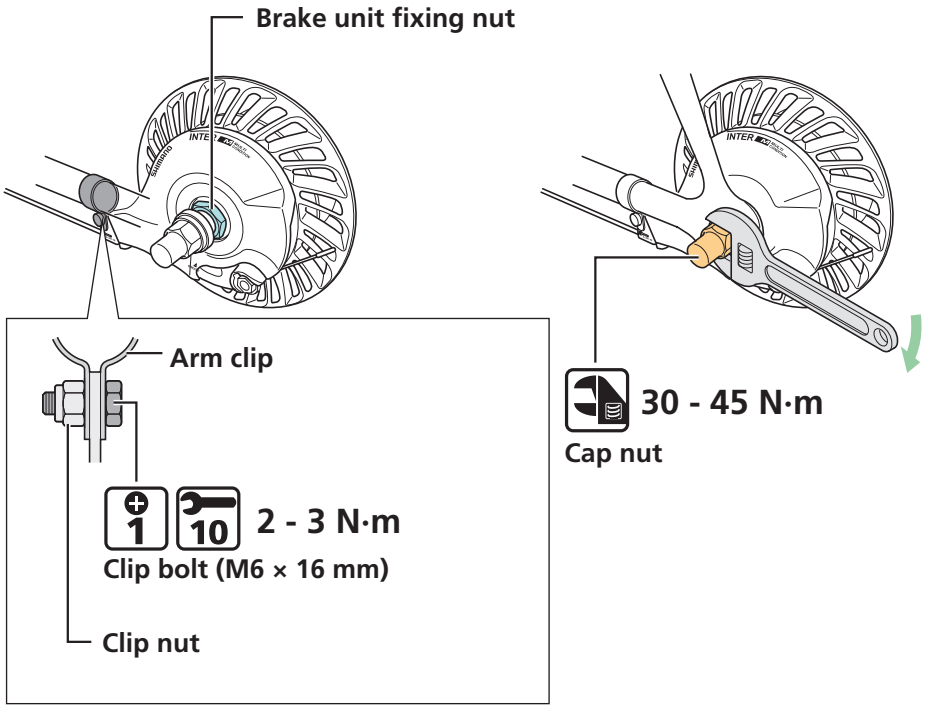

In the case of coaster brake type

(1) Secure the brake arm with the arm clip.

(2) Take up slack in the chain and firmly secure the wheel to the frame with the cap nut.

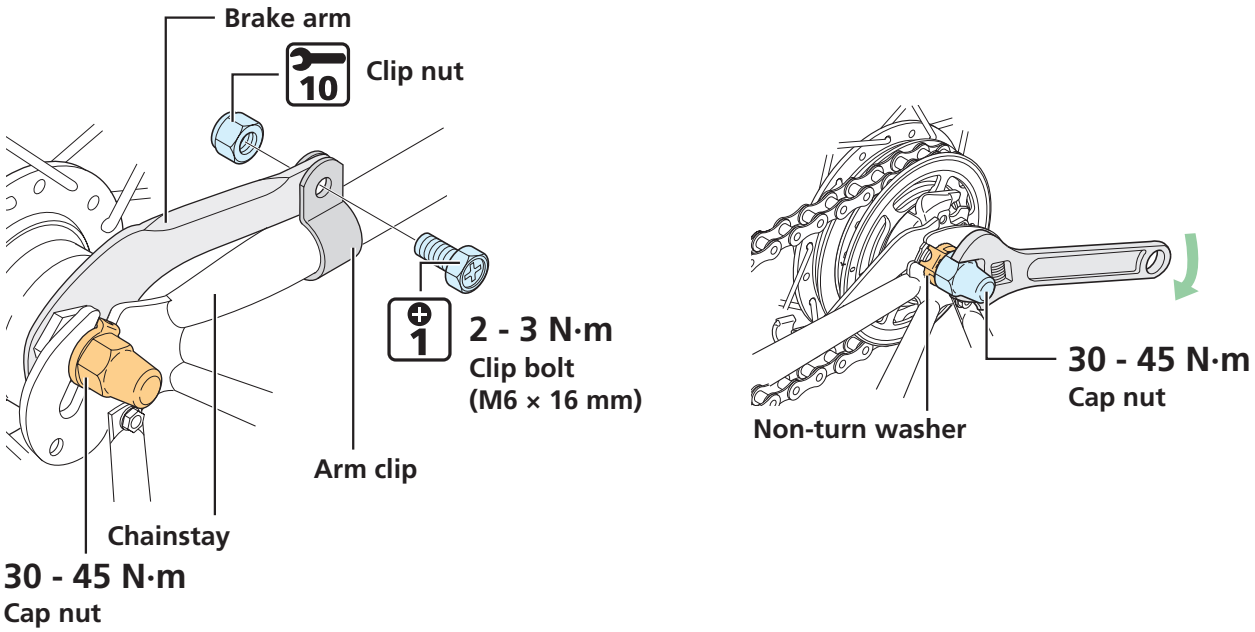

⚠ WARNING

- When securing the brake arm to the frame, be sure to use an arm clip that matches the size of the chainstay, and securely tighten them with the clip bolt and clip nut to the specified tightening torque.
  Use a lock nut with nylon insert (self-locking nut) as the clip nut. It is recommended that SHIMANO made clip bolts, clip nuts, and arm clips be used.
  If the clip nut comes off the brake arm, or if the clip bolt or arm clip becomes damaged, the brake arm may rotate on the chainstay and cause the handlebars to jerk suddenly, or the bicycle wheel may lock and result in serious injury due to a fall or collision.

NOTICE

- If it is not installed correctly, braking performance will suffer. Be very careful when installing it.
- If excessive force is applied to the brake arm to secure it, a problem such as noise will occur and the wheel will become difficult to turn.
- After installing the arm clip, check that the clip bolt protrudes approximately 2 - 3 mm from the end face of the clip nut.

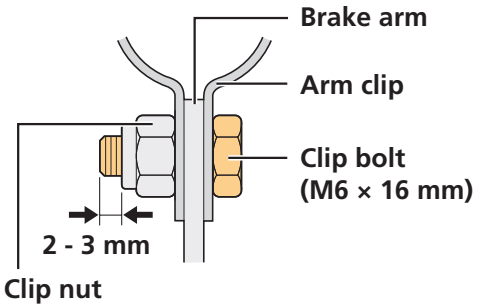

Before using the bicycle, check that the brake works properly and that the wheel turns smoothly.

Installation of the shifting cable

Shift lever side

1. Install the inner cable and outer casing aligned with the shift lever.

Refer to the dealer's manual of the shift lever for details.

NOTICE

- Make sure that the sealed outer cap is at the shift lever end.

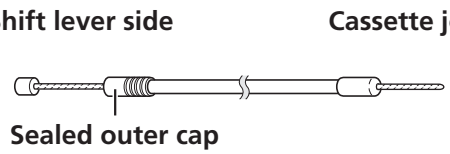

Cassette joint side

1. Operate the shift lever and set to the specified gear position.

SG-S7001 (internal 11-speed): 11-speed

SG-S7001 (internal 8-speed): 8-speed

SG-C6001 / SG-C6011 (internal 8-speed): 1-speed

SG-C7000 / SG-C7002 (internal 5-speed): 5-speed

2. Install the rubber cover and rubber bellows to the outer casing holder body.

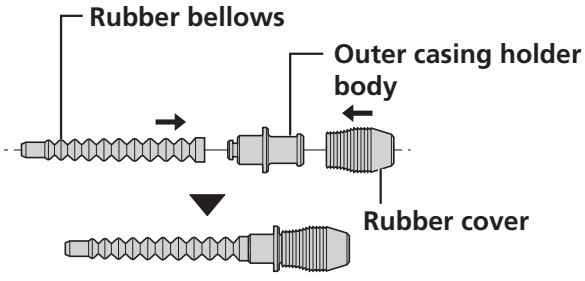

TECH TIPS

- This operation is not required if there is no rubber cover or rubber bellows.

3. Pass the inner cable through.

(1) Wipe away any grease which may be on the inner cable and, while holding the end of the rubber bellows, pass the inner cable through.

(2) Insert the outer casing into the rubber cover and set it into the outer casing holder body. Push the outer casing so that it securely touches the outer casing holder body.

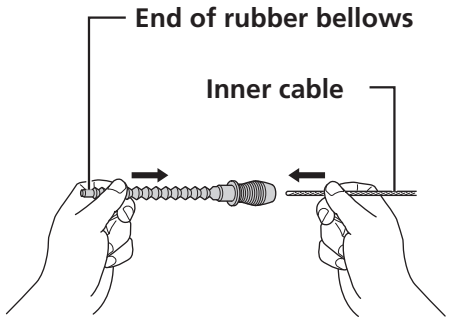

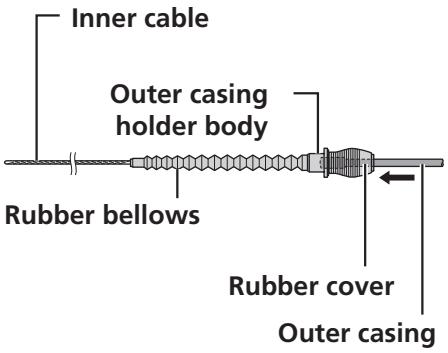

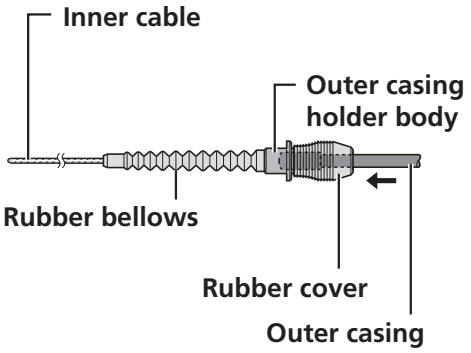

NOTICE

- Use a new inner cable; do not use a cable which has had its end cut off. Pay attention to the end of the inner cable.



4. Install the inner cable fixing bolt unit.

After checking that the end of the outer casing is securely set in the cable adjustment barrel of the shift lever, secure the unit at the specified length while pulling the inner cable.

SG-S7001 (internal 11-speed): 184 mm

SG-S7001 (internal 8-speed): 145 mm

SG-C6001 / SG-C6011 (internal 8-speed): 101 mm

SG-C7000 / SG-C7002 (internal 5-speed): 145 mm

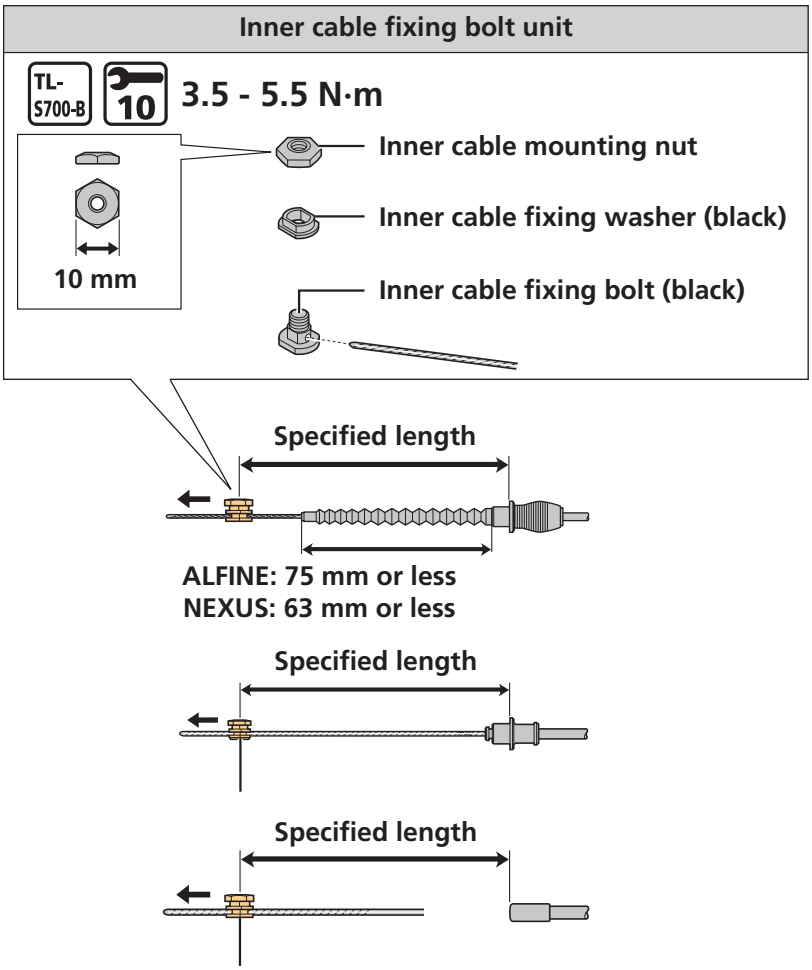

NOTICE

- Use the special inner cable fixing bolt unit.

TECH TIPS

- When installing the inner cable fixing bolt unit, use the setting tool TL-S700-B / TL-CJ40.

TL-S700-B (145 mm / 184 mm)

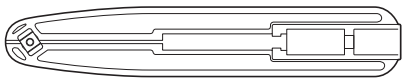

TL-CJ40 (101 mm / 127 mm)

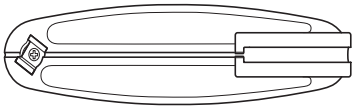

5. Set the inner cable fixing bolt unit.

(1) Fit the inner cable fixing bolt unit into the notch in the pulley.

(2) Turn the cable 60° clockwise or counterclockwise and attach it to the hook.

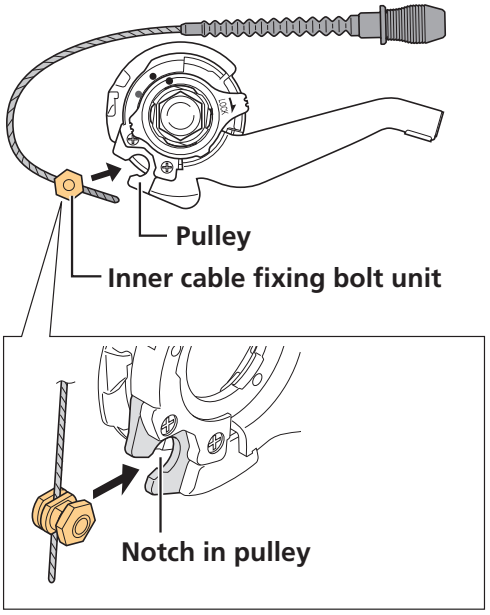

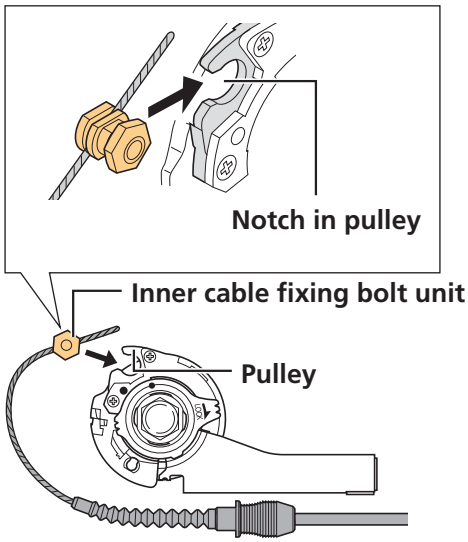

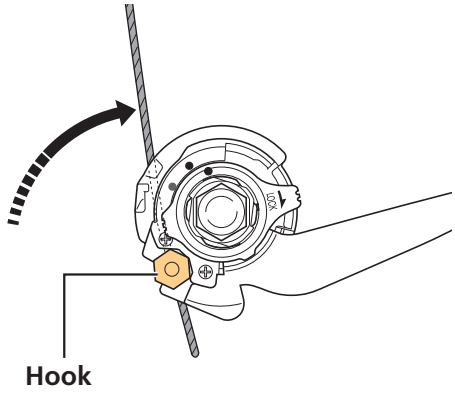

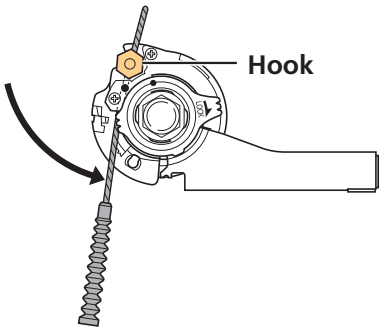

TECH TIPS

- Some models enable the outer casing holder of the cassette joint to be installed first by turning the pulley of the cassette joint.

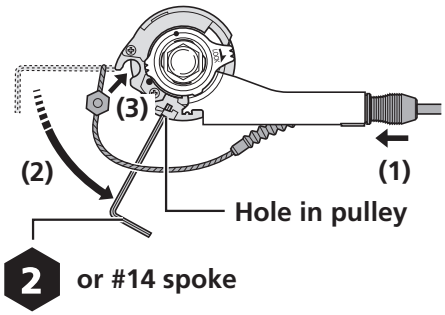

6. Set the inner cable and outer casing.

Set the inner cable in the pulley as shown in the figure, insert the inner cable into the slit in the cassette joint bracket, then securely set the outer casing holder into the outer casing holder section of the cassette joint.

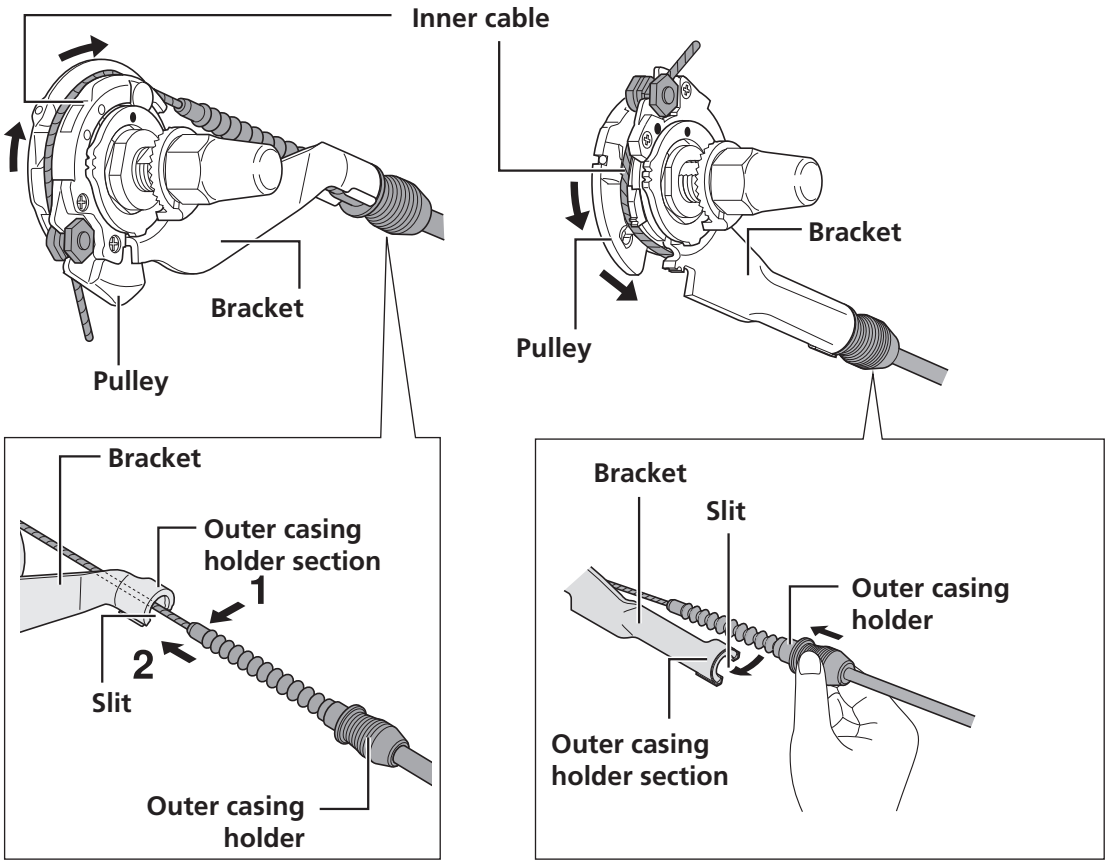

NOTICE

- Check that the inner cable is correctly seated inside the pulley guide.

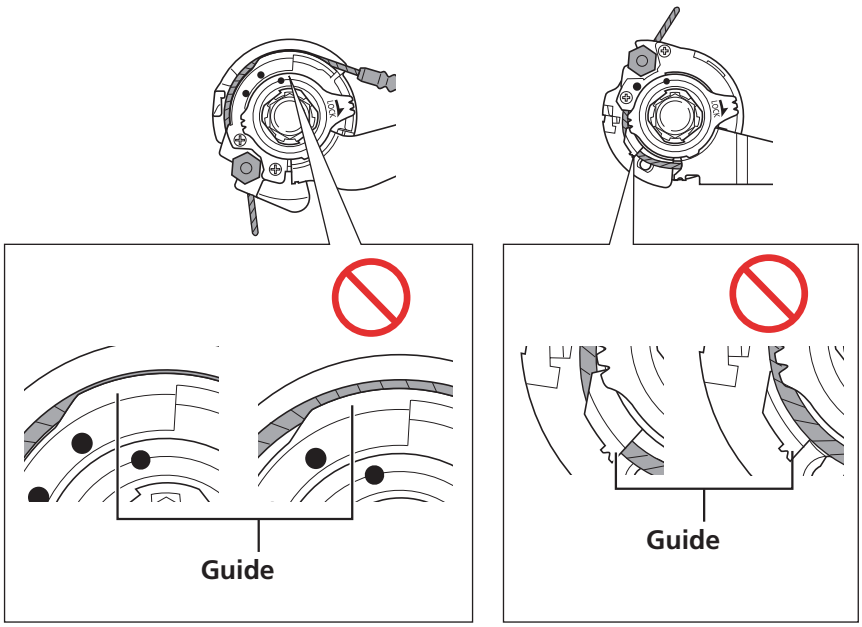

7. Secure the cable to the frame with the outer casing bands.

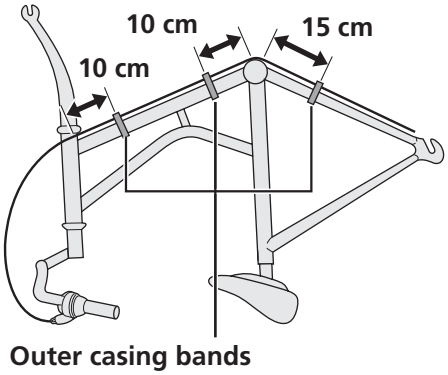

ADJUSTMENT

Adjusting the cassette joint

1. Operate the shift lever and set to the specified gear position.

SG-S7001 (internal 11-speed): 11-speed to 6-speed

SG-S7001 (internal 8-speed): 8-speed to 4-speed

SG-C6001 / SG-C6011 (internal 8-speed): 1-speed to 4-speed

SG-C7000 / SG-C7002 (internal 5-speed): 5-speed to 3-speed

2. Turn the cable adjustment barrel and align the setting lines.

Check that the yellow setting lines on the cassette joint bracket and pulley are aligned with each other. The yellow setting lines on the cassette joint are located in two places.

When the bicycle is upright

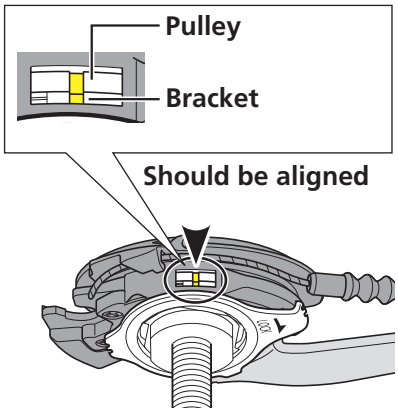

When the bicycle is upside down

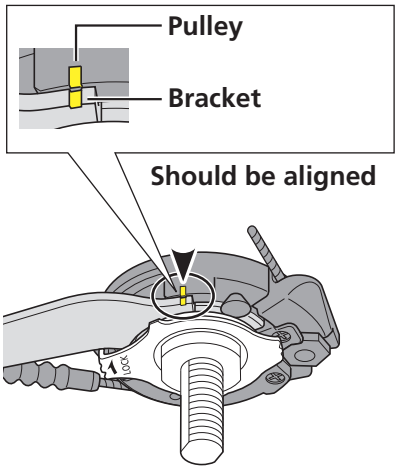

NOTICE

- If the area of the pulley and bracket marked by the setting line overlap by two thirds or less, the gears may not be properly engaged during pedaling, resulting in abnormal noise or free spinning of the pedals.

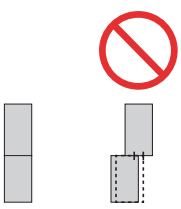

3. Operate the shift lever and recheck that the yellow setting lines are aligned.

Operate the shift lever again from step 1 to check.

4. Cut off the excess length of inner cable, then install the inner end cap.

For 11-speed, after installing the inner end cap, slightly bend the inner cable outward (towards the rear dropout) so that it does not touch the chain.

11-speed

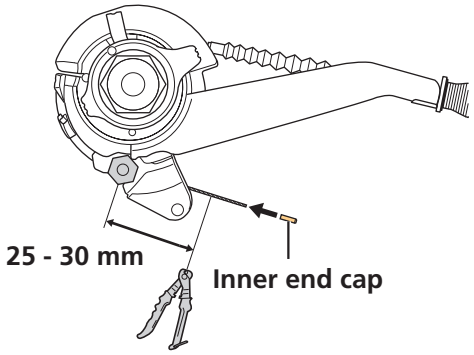

8-speed

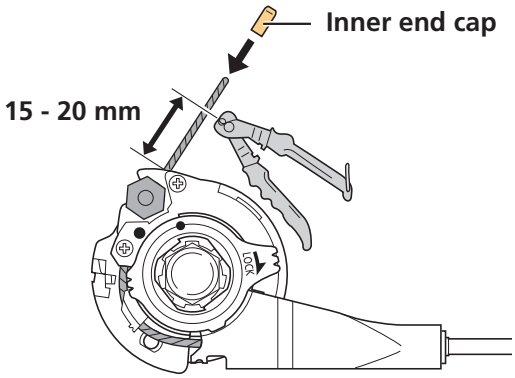

5-speed

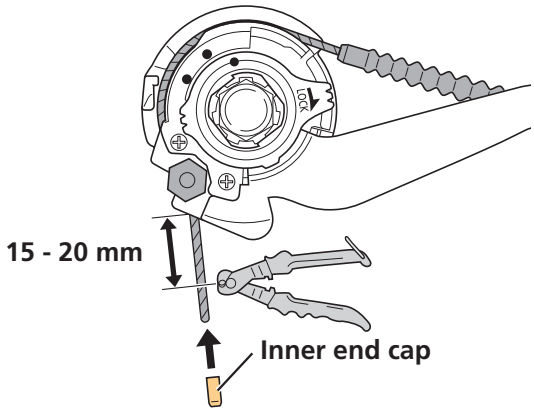

MAINTENANCE

Disconnecting the shifting cable when removing the rear wheel from the frame

1. Set the shift lever to the specified gear.

SG-S7001 (internal 11-speed): 11-speed

SG-S7001 (internal 8-speed): 8-speed

SG-C6001 / SG-C6011 (internal 8-speed): 1-speed

SG-C7000 / SG-C7002 (internal 5-speed): 5-speed

2. Pull the outer casing holder out from the outer casing holder section.

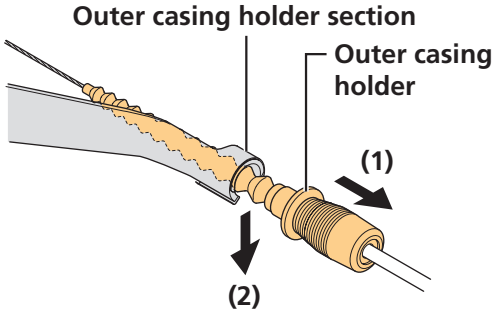

3. Remove the inner cable from the pulley guide, and remove the inner cable fixing bolt unit.

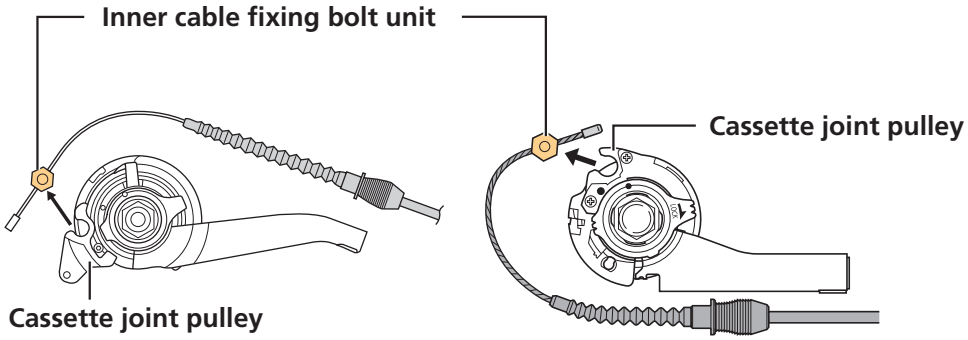

TECH TIPS

- If it is difficult to remove the shifting cable, some models enable the outer casing holder to be pulled out from the outer casing holder section of the cassette joint by turning the pulley of the cassette joint.

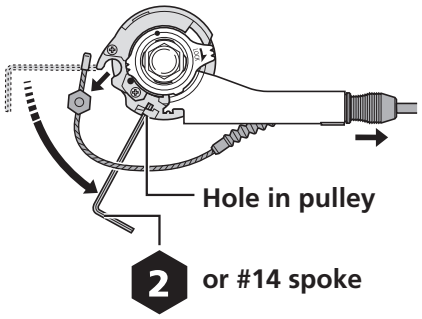

■ Oil maintenance of the internal assembly

The work performed here will be the same as in SG-C7050-5.
Refer to "Oil maintenance of the internal assembly (oil maintenance kit: Y00298010)" (P.45).

INTER 5 E

Dealer's Manual

SG-C7050-5V
SG-C7050-5R
SG-C7050-5C
SG-C7050-5D

INSTALLATION

■ Installation of sprocket to the hub

Refer to the internal geared hub-compatible SHIMANO STEPS dealer's manual for information on installing parts not listed in this document.

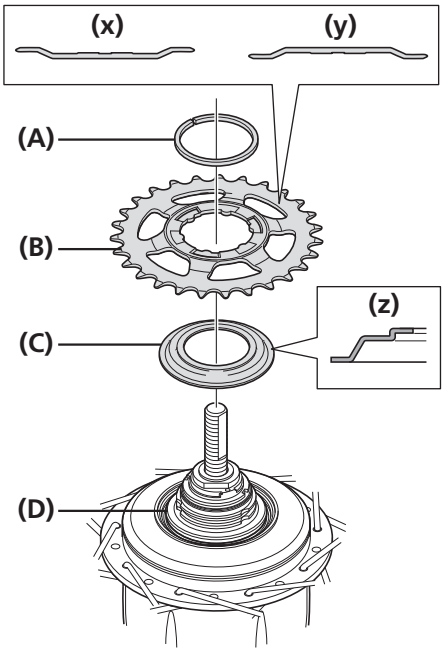

Place right-hand dust cap onto the driver on the right side of the hub body.

Next, install the sprocket and secure it in place with the snap ring.

(x) Outward assembling: MU-UR520 / MU-UR510 only

(y) Inward assembling: Compatible with all motor units

(z) Note the direction

(A) Snap ring
(B) Sprocket
(C) Right-hand dust cap C
(D) Driver

NOTICE

- Only SM-C7050 and CS-C7000 can be used with SG-C7050.
- If using the MU-UR520 / MU-UR510 motor unit, outward assembly of the sprocket is possible.

■ Installation of the motor unit to the hub

Unless otherwise noted, MU-UR500 is used as an example for this explanation.
Step 2 describes the procedure for using a shift switch to place the mechanism of the motor unit in the initial position before installation, which is required if the motor unit is not in the factory default setting (during maintenance, etc.).
Refer to "CONNECTION OF THE ELECTRIC WIRES" to place the motor unit in a state where operations can be performed. For the MU-UR520, refer to "Pairing for wireless gear shifting (MU-UR520)" to pair it with a shift switch in advance, as required.

1

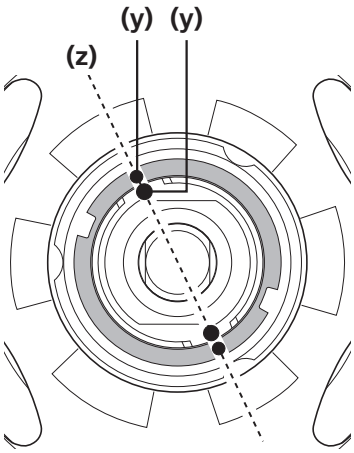

Check that the two • marks (red) on the right side of the hub body are aligned.

(y) • mark (red)

(z) Should be aligned

TECH TIPS

If the two • marks (red) are not aligned, align the two • marks (red).

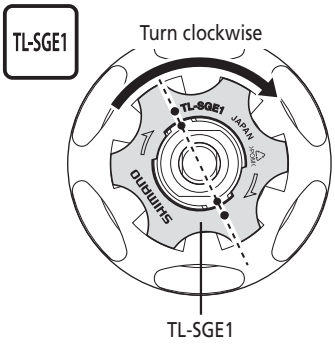

2

Make sure that the two protrusions on the inside of the motor unit are at the initial positions.
• Confirm that the marks and protrusions are aligned.

MU-UR500

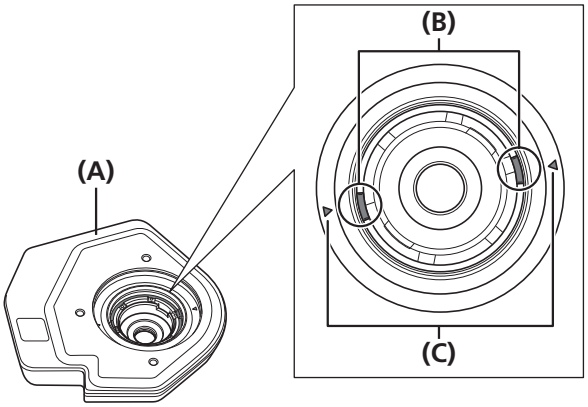

MU-UR520 / MU-UR510

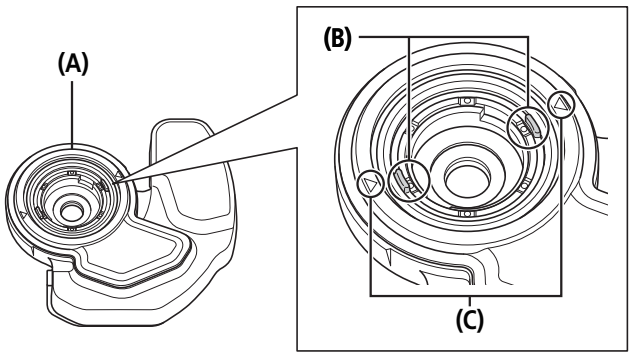

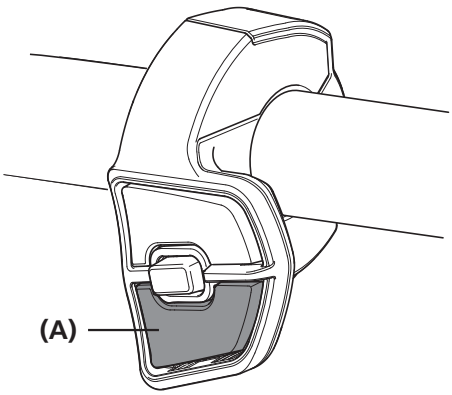

* If you are using a shifting switch other than the above, press the equivalent switch (on the shift down side) four or more times.

(A) Inside motor unit
(B) Protrusion
(C) Mark

NOTICE

Check that the rubber seal is attached. If the rubber seal is not attached, attach as shown in the illustration.

MU-UR500 **MU-UR520 MU-UR510**

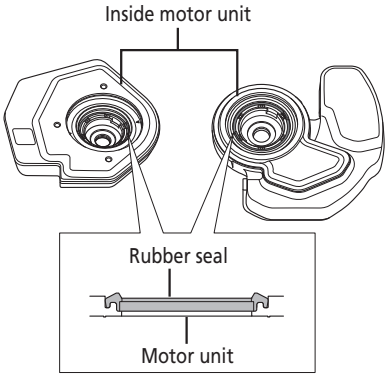

(A) Shifting switch

NOTICE

The motor unit is set at the initial position when it is shipped; therefore, install it without changing the position. If the motor unit may not be at the initial position, push the shifting switch four or more times to move the protrusions on the motor unit counterclockwise (check from the inside of the motor unit). (Check the shifting up and down of the shifting switch in advance as it may have been switched by customization.) If the motor unit is installed off the initial position, some gears may become unavailable and the hub or the motor unit may be damaged.

3

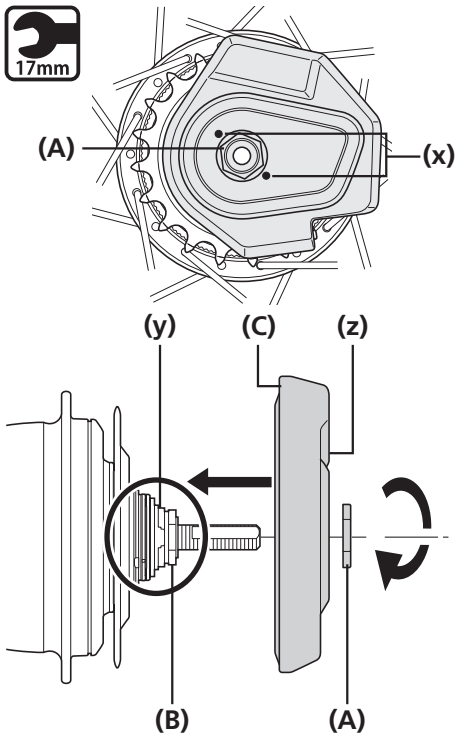

Install the motor unit to the hub so that the • mark **(x)** on the motor unit is aligned with the • mark **(y)** on the hub lock spacer.

After this, gently push the motor unit while turning it slowly to set it correctly until it stops turning on the hub axle.

Next, secure the motor unit by tightening the L lock nut.

(x) motor unit • mark (silver)

(y) hub lock spacer • mark (red)
This is the mark for which the position was aligned in step 1.

(z) Outer side

(A) L lock nut
(B) Right-hand lock nut
(C) Motor unit

Tightening torque	
17mm	6 - 10 N·m

NOTICE

Check that the guide of right-hand lock nut is seated securely in the guide hole on the front of the motor unit.

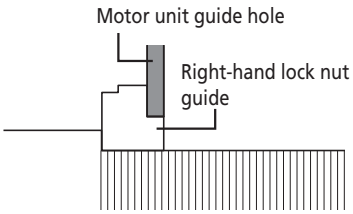

■ Installation of the disc brake rotor

Install the disc brake rotor as shown in the illustration.

Center lock type

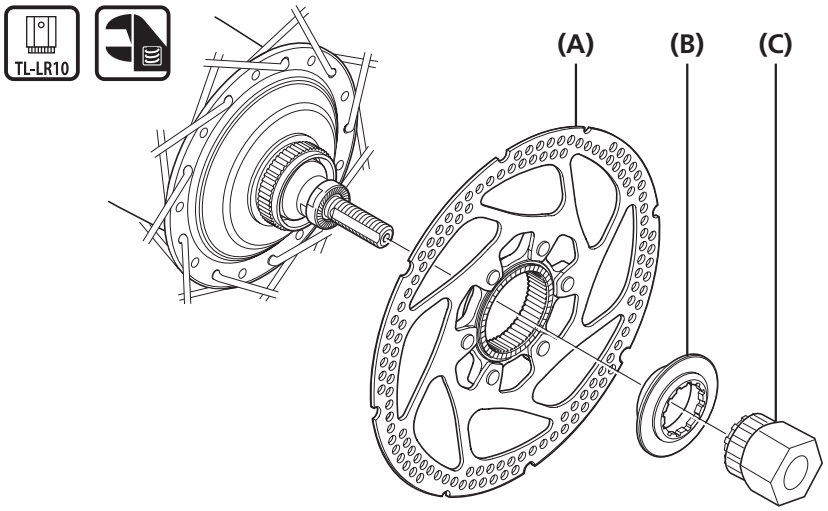

(A) Disc brake rotor
(B) Disc brake rotor installation ring
(C) TL-LR10

Tightening torque	
TL-LR10	40 N·m

■ Installation of the hub to the frame

Non-turn washer

Use non-turn washers to secure the internal geared hub and motor unit to the frame.
Non-turn washers are classified with a mark and main body color for easy identification. There are left and right types, and the right type is normally used on the chain side.
Refer to the following to select the non-turn washer based on the shape of the motor unit and rear dropout to use.

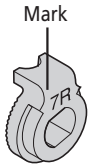

MU-UR500

• When the rear dropout is the reversed type

Rear dropout	Installation angle of non-turn washer and motor unit		
	5R (yellow) / 5L (brown)	6R (silver) / 6L (white)	7R (black) / 7L (gray)
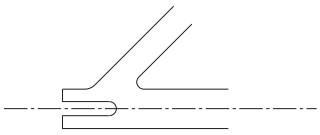	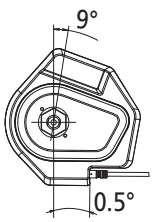	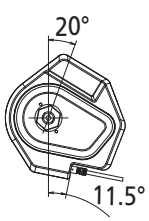	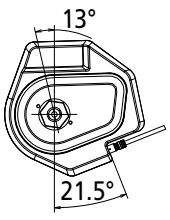

Dealer's Manual (SG-C7050-5V / SG-C7050-5R / SG-C7050-5C / SG-C7050-5D)

• When the rear dropout is the standard type

Rear dropout	Installation angle of non-turn washer and motor unit		
	5R (yellow) / 5L (brown)	6R (silver) / 6L (white)	7R (black) / 7L (gray)
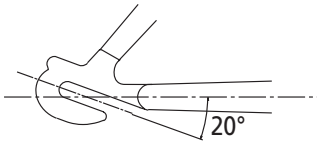	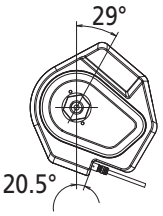	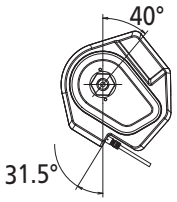	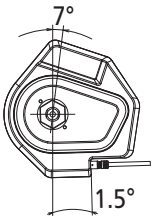
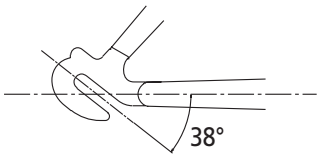	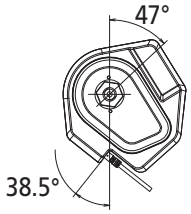	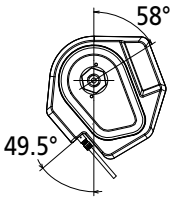	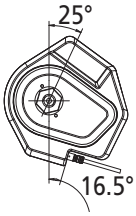

• When the rear dropout is the straight drop type

Rear dropout	Installation angle of non-turn washer and motor unit
	8R (blue) / 8L (green)
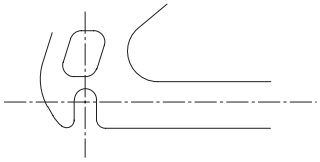	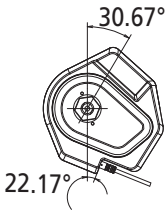
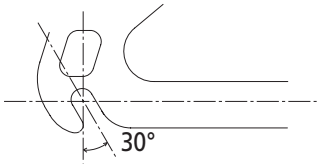	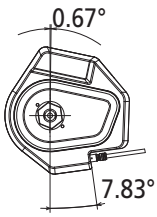

MU-UR520 / MU-UR510

• When the rear dropout is the standard type

Rear dropout	Installation angle of non-turn washer and motor unit
	6R (silver) / 6L (white)
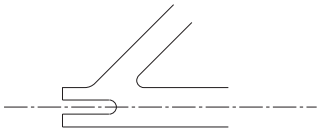	

• When the rear dropout is the reversed type

Rear dropout	Installation angle of non-turn washer and motor unit 5R (yellow) / 5L (brown)	Rear dropout shape	Installation angle of non-turn washer and motor unit 7R (black) / 7L (gray)
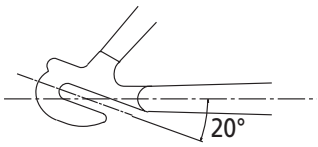		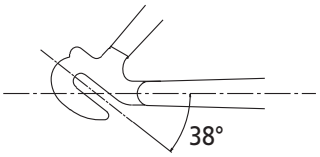	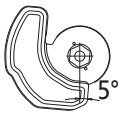

• When the rear dropout is the straight drop type

Rear dropout	Installation angle of non-turn washer and motor unit 8R (blue) / 8L (green)	Rear dropout shape	Installation angle of non-turn washer and motor unit 9R (light green) / 9L (light brown)
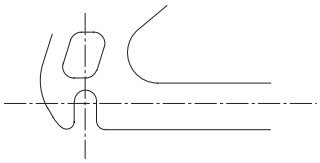		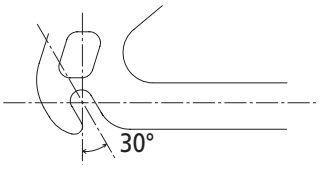	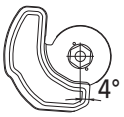

Installation methods

1 Mount the chain on the sprocket, then set the hub axle into the rear dropout.

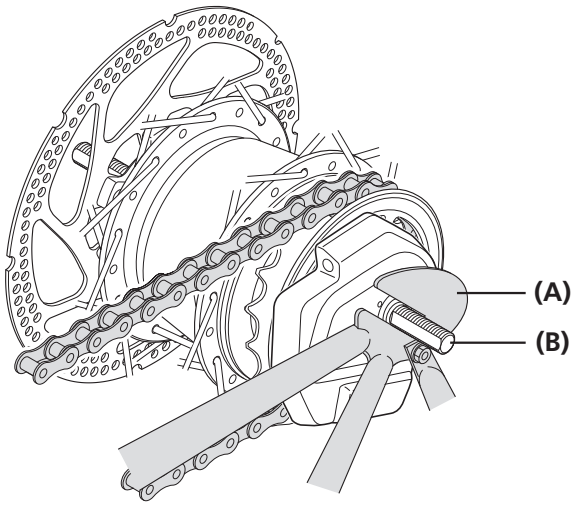

(A) Rear dropout
(B) Hub axle

2

Place non-turn washers and onto the right and left sides of the hub axle.

At this time, turn the motor unit so that the protrusion of the non-turn washers fit into the grooves of the rear dropouts and align the washers to be almost parallel to the chainstay.

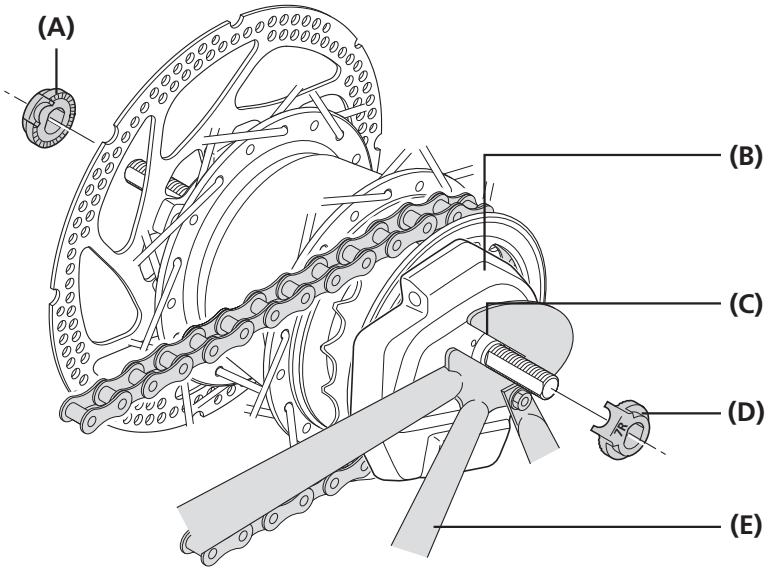

(A) Non-turn washer (for left-side use)
(B) Motor unit
(C) Rear dropout groove
(D) Non-turn washer (for right-side use)
(E) Chainstay

TECH TIPS

- Install the non-turn washer with its protrusion part aligned with the straight part of the rear dropout.

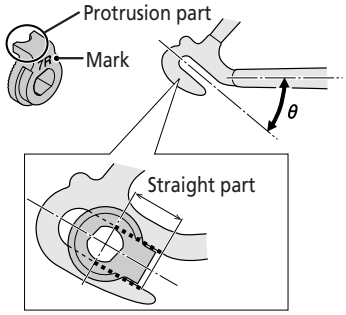

- Install the non-turn washer so that the protrusion fits securely in the rear dropout groove at the front and back sides of the hub axle.

3

Take up slack in the chain and secure the wheel to the frame with the hub nut.

15mm

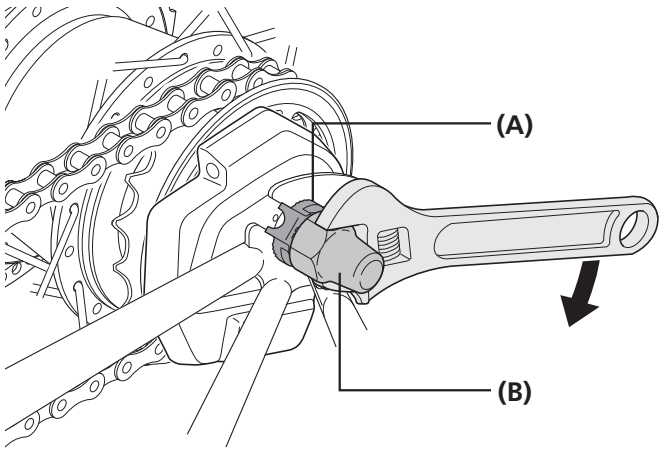

(A) Non-turn washer
(B) Hub nut

Tightening torque	
15mm	30 - 45 N·m

NOTICE

- When installing parts such as a mudguard stay to the hub axle, install them in the order shown in the figure.

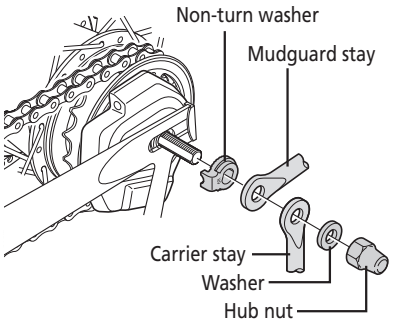

For coaster brakes

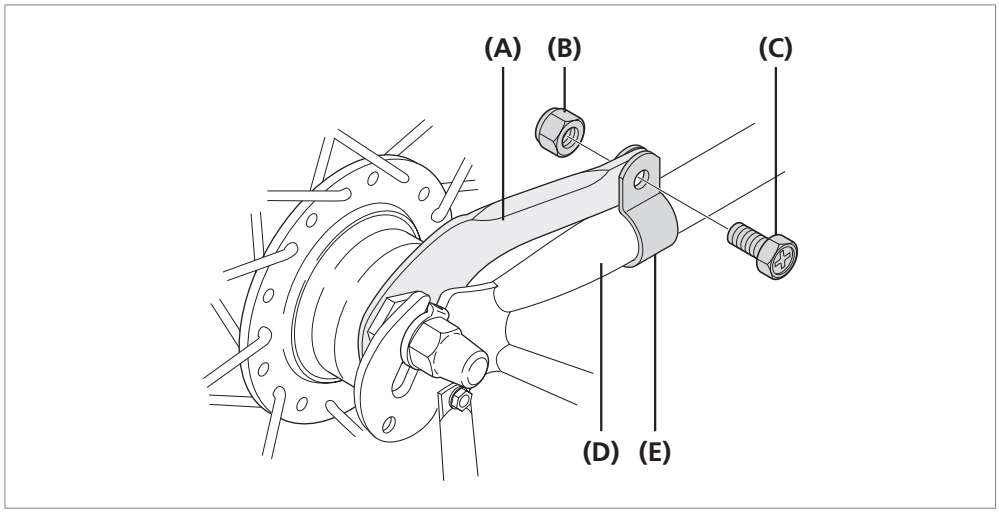

(A) Brake arm
(B) Clip nut
(C) Clip bolt
(D) Chainstay
(E) Arm clip

CONNECTION OF THE ELECTRIC WIRES

Refer to the internal geared hub-compatible SHIMANO STEPS dealer's manual when connecting electric wires to parts not listed in this document.

NOTICE

Information on the electric wire and the SHIMANO original tool is described in "NOTICE" in "TO ENSURE SAFETY". Be sure to refer to it before starting the work.

■ Connection to motor unit

MU-UR520

1

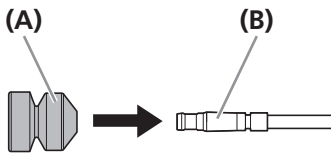

Prepare the electric wire to connect to the drive unit.
Pass the rubber cover included with the MU-UR520 from the tip of the electric wire on the motor unit side.

(A) Rubber cover
(B) Electric wire

NOTICE

- When connecting to a BOSCH Smart System drive unit, use the EW-PS300 instead of an electric wire. For details, refer to the EW-PS300 Dealer's Manual.

2

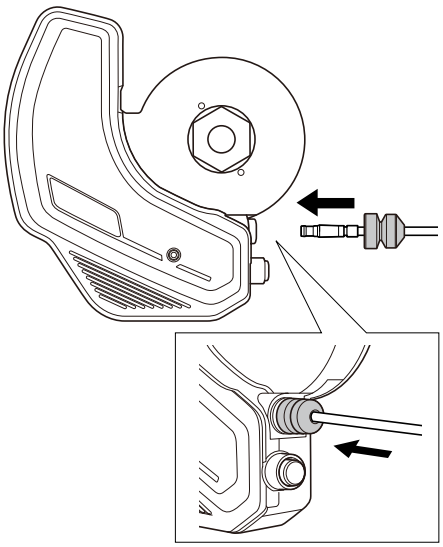

Connect the electric wire to the E-TUBE port of the motor unit, then move the rubber cover and connect it to the E-TUBE port.

3

After connecting the electric wires to all of the components, install the battery and check the operation.

Check that gear shifting of the rear can be performed properly by operating the shifting switch.

MU-UR510 / MU-UR500

1

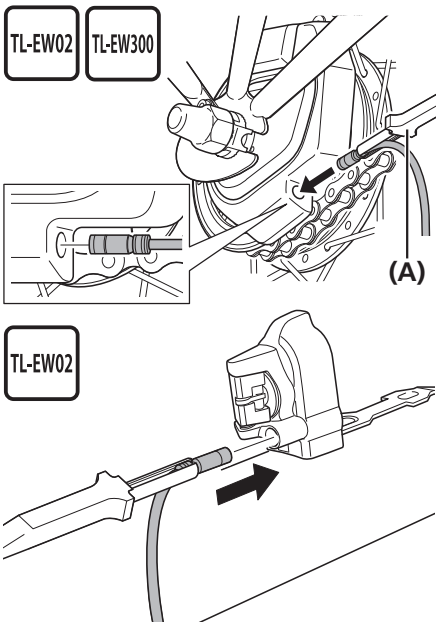

Connect the electric wires to the motor unit and the battery mount.

(A) TL-EW02 (MU-UR500)
TL-EW300 (MU-UR510)

2

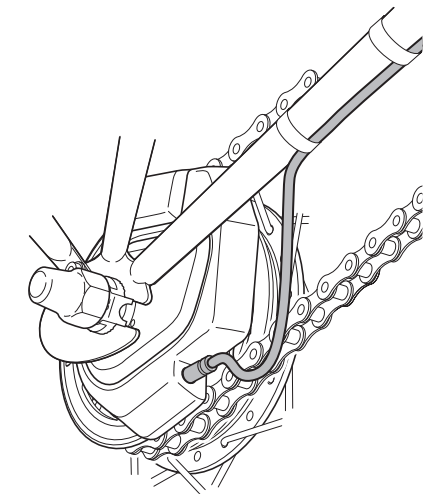

Temporarily secure the electric wire along the frame with tape, and connect it to junction [B].

NOTICE

- When routing the electric wire to the motor unit, be sure to install it to the bottom of the chainstay to avoid any interference between the cable and the chain.
- If the motor unit is the MU-UR510 (EW-SD300 type), use the conversion adapter (EW-AD305) to connect the EW-SD50 and EW-SD300, and connect them to junction [B].

3

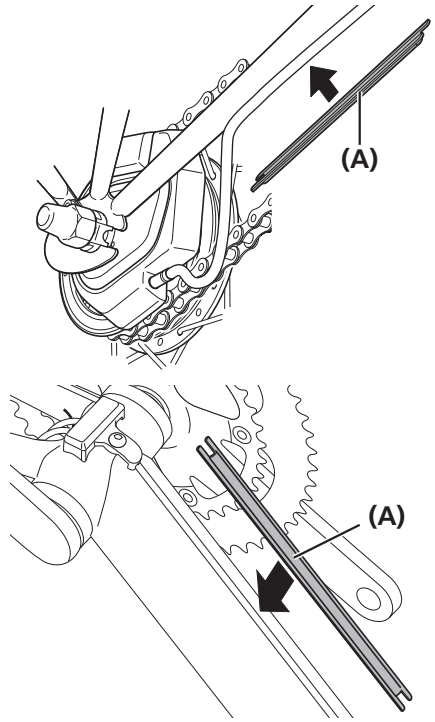

Install the electric wire cover/cord cover onto the frame.

In order to make sure that the electric wire cover/cord cover is securely attached, clean the frame with alcohol or some other cleaning agent to remove any grease or other substances before installing the cover.

Place the electric wire cover/cord cover over the electric wires, then attach it to the frame.

(A) Electric wire cover (EW-SD50 type)
SM-EWC2
Cord cover (EW-SD300 type)
EW-CC300

4

After connecting the electric wires to all of the components, install the battery and check the operation.

Check that gear-shifting of the rear can be performed properly by operating the shifting switch.

■ Disconnection of the electric wires

NOTICE

- Do not keep connecting and disconnecting the small waterproof connector. The waterproof section or the connecting section may become worn or deformed, and the function may be affected.
- For the MU-UR520, move the rubber cover, then remove the electric wire.

Motor unit

TL-EW02

TL-EW300

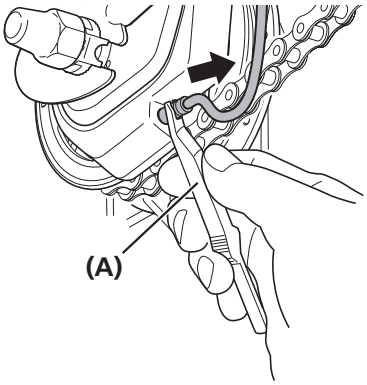

Use the wide end of the SHIMANO original tool to disconnect the electric wire on the motor unit side.

(A) TL-EW02 (MU-UR500)
TL-EW300 (MU-UR520 / MU-UR510)

MAINTENANCE

■ Adjusting the motor unit

Performing adjustment from E-TUBE PROJECT Professional

For the latest information on E-TUBE PROJECT Professional, check https://bike.shimano.com/e-tube/project.html.

⚠ CAUTION

- Improper adjustment may cause gear engagement skipping, resulting in an accidental fall.
- Perform adjustment only when you have an unusual feel during shifting. If there is no problem with shifting, unnecessary adjustment may worsen shifting performance.

1 Download the latest version of E-TUBE PROJECT Professional from the support website.
(**https://bike.shimano.com/e-tube/project.html**)

2 Use the SM-PCE02 to connect the bicycle (system or component) to the PC.

3 Perform adjustment in E-TUBE PROJECT Professional.
For the adjustment procedure, refer to the user's manual for E-TUBE PROJECT Professional.
(https://si.shimano.com/um/7J4WA/gearbox_adjustment)

4 Finally, ride the bicycle to check whether there is no problem.

Performing adjustment from E-TUBE PROJECT Cyclist

For the latest information on E-TUBE PROJECT Professional, check https://bike.shimano.com/e-tube/project.html.

⚠ CAUTION

- Improper adjustment may cause gear engagement skipping, resulting in an accidental fall.
- Perform adjustment only when you have an unusual feel during shifting. If there is no problem with shifting, unnecessary adjustment may worsen shifting performance.

1 Download E-TUBE PROJECT Cyclist.

2 Connect with the smartphone via Bluetooth® LE.

3 Perform adjustment in E-TUBE PROJECT Cyclist.
For the adjustment procedure, refer to the user's manual for E-TUBE PROJECT Cyclist.
(https://si.shimano.com/um/7J4MA/gearbox_adjustment)

4 Finally, ride the bicycle to check whether there is no problem.

For E-BIKE

If a cycle computer is installed to the bicycle with SHIMANO STEPS, adjustment can be performed from the cycle computer. For details, refer to the SHIMANO STEPS Cycle Computer and Switch Unit Parts Dealer's Manual (Gen.2) (https://si.shimano.com/dm/SCSW002/).
If a cycle computer is not installed to the bicycle with SHIMANO STEPS or a cycle computer is connected to a drive unit from another manufacturer, refer to "Performing adjustment from E-TUBE PROJECT Professional" or "Performing adjustment from E-TUBE PROJECT Cyclist", depending on the specifications of the component you are using.

■ Oil maintenance of the internal assembly (oil maintenance kit: Y00298010)

Content of kit: WB maintenance oil, Container

General Safety Information

⚠ WARNING

- When lubricating the internal unit, be careful that no oil gets on the disc brake rotor, pads, on the rim when using rim brakes, etc.
  If oil gets on any of these parts, there is a danger that brake performance may be reduced.
  Take care of this problem according to the procedures in the brake instruction manual.
- Since there is a risk of explosion or fire, do not smoke, eat, or drink while using this oil. In addition, keep it away from ignition sources such as heat, sparks, open flames, or high temperatures and prevent it from catching fire due to static electricity sparks or other sparks.
- Use only outdoors or in a well-ventilated area. Inhalation of oil mist or vapors may cause nausea. Be careful to provide ventilation and use a respirator type mask.
  If mist or vapor is inhaled, go immediately to an area with fresh air. Cover up with a blanket. Stay warm and stable and seek professional medical advice.

Cautions regarding handling of WB maintenance oil:

- Use appropriate eye protection when handling, and avoid contact with eyes. In the event of eye contact, flush with fresh water and seek medical assistance immediately. Contact with eyes may result in irritation.
- Use gloves when handling. In the event of skin contact, wash well with soapy water. Contact with skin may cause a rash and discomfort.
- Do not drink. If it is drunk by mistake, do not induce vomiting; make the affected person drink 1 to 2 cups of water and seek medical assistance immediately.
  If the affected person loses consciousness, do not give the person anything by their mouth. If vomiting occurs naturally, tilt the body to prevent inhalation.
- After use, be sure to wash hands thoroughly.
- Keep the container sealed to prevent foreign objects and moisture from getting inside, and store it in a cool, dark area away from direct sunlight.
- Keep out of reach of children.
- Dispose of used oil, old oil, or oil used for cleaning in accordance with the method stipulated by the law.
- In order to maintain proper performance, it is recommended that you replace the oil once a year from the start of use (or once about every 2,000 km if the bicycle is used very frequently).
- Do not use oil other than WB maintenance oil. Problems such as an oil leakage and gear shifting malfunction may occur.
- Disposal of used oil: Follow local county and/or state codes for disposal. Use caution when preparing the oil for disposal.
- Read this manual carefully, and keep it in a safe place for later reference.
- For the latest product safety data sheets, check the website https://si.shimano.com.

1



Fill the container with maintenance oil to a height of 95 mm.

(z) 95 mm

2



Immerse the internal unit in the oil from the left side until the oil reaches up to ring gear unit 1, as shown in the illustration.

(z) Ring gear unit 1

3



Keep the internal unit immersed for approximately 90 seconds.

4



Remove the internal unit from the oil.

5



Let excess oil drain off for approximately 60 seconds.

TECH TIPS

<Maintenance oil>

- The maintenance oil is reusable. Refill it as needed.
- Store it with the lid closed after use.

NOTICE

After oil maintenance, it is recommended that you apply Grease (Y04130100) to the ball retainers, snap ring, brake shoe, and pinion gears.

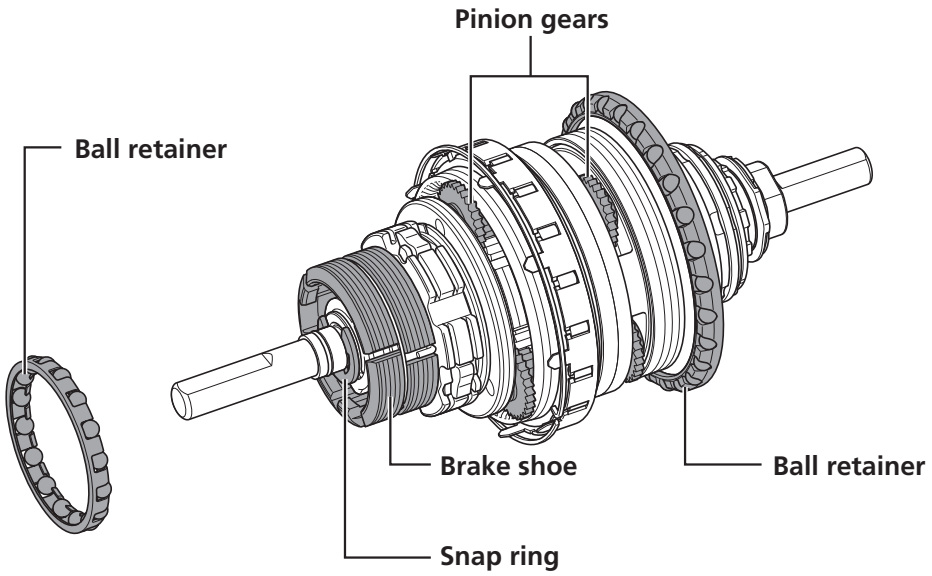

The illustration shows an example.

6

Reassemble the hub.

(1) Use the left-hand cone (or the stop nut for the coaster brake type) to adjust the hub so that the hub shell rotates smoothly and there is no excess play in the hub axle. Ensure that the side of the stop nut without a protrusion is facing up.

(2) Tighten the left-hand lock nut.
The tightening torque of the left-hand lock nut depends on the type.

- For the disc brake, roller brake, or V brake type: 24.5 to 29.4 N·m
- For the coaster brake or coaster brake (with disc brake) type: 17.7 to 24.5 N·m

In the case of roller brake type

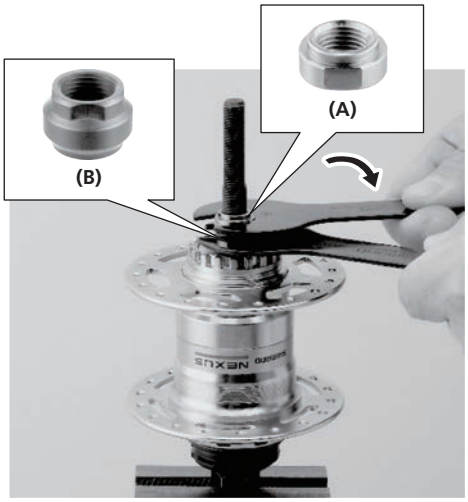

The image shows an example.

(A) Left-hand lock nut
(B) Left-hand cone

In the case of coaster brake type

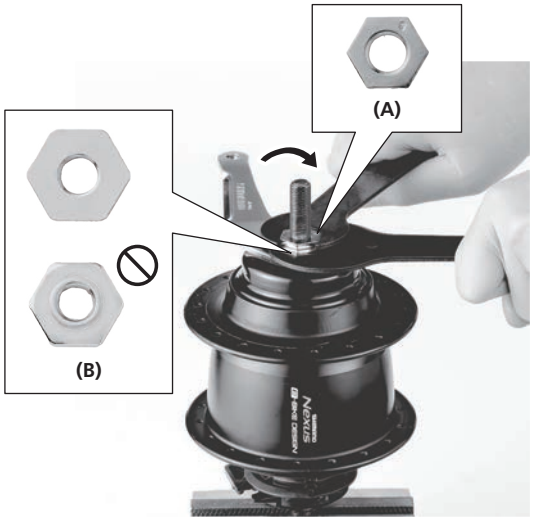

The image shows an example.

(A) Left-hand lock nut
(B) Stop nut

INTER 5 E

Dealer's Manual

SG-C7010-5D

Installation / removal

Installing the sprocket / belt pulley

1. **Install the right-hand dust cap, then set the sprocket / belt pulley.**

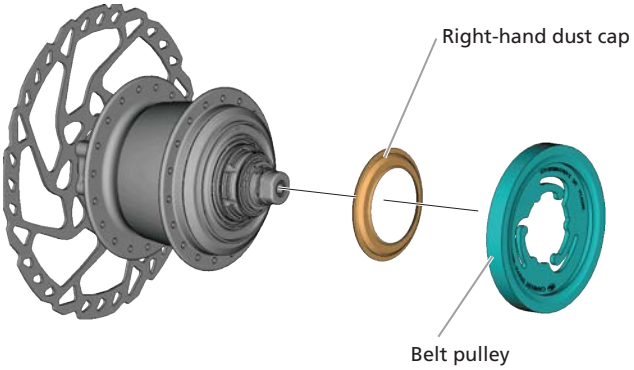

NOTICE

- Note the orientation of the right-hand dust cap, belt pulley, and sprocket.

  Belt pulley

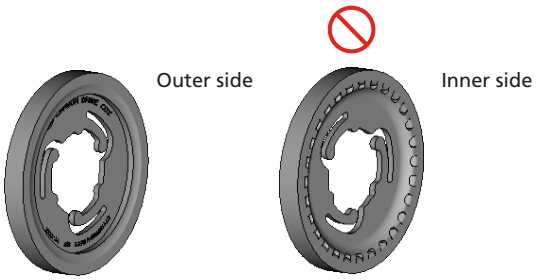

  Sprocket

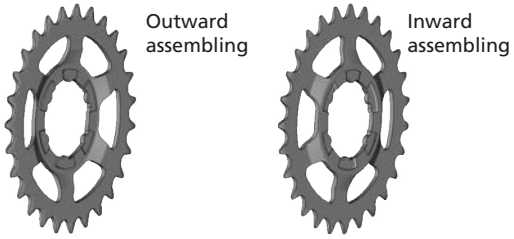

Applicable sprockets	
Outward assembling	Inward assembling
24T, 27T, 30T	24T, 27T, 30T

  Right-hand dust cap

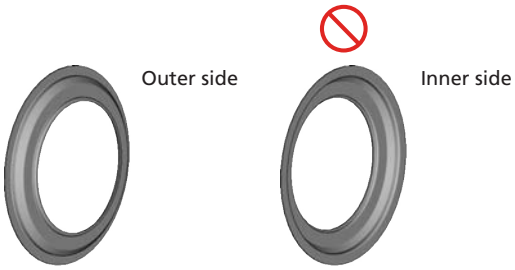

2. Set and tighten the lock ring.

Use the TL-SGL01 + TL-FC31 to secure it.

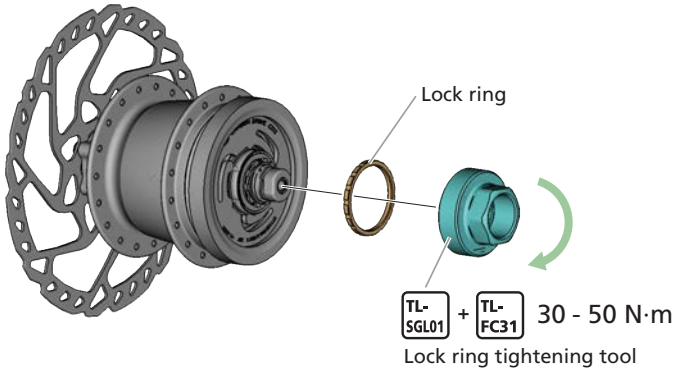

NOTICE

- Keep the TL-SGL01 perpendicular to the sprocket / belt pulley during use.

Installation of the cassette joint to the hub

1. **Turn the pulley to align the cassette joint marks (red). With the cassette joint in this condition, set the cassette joint to the hub body so that the marks (red) on the cassette joint are aligned with the marks (red) on the hub body.**

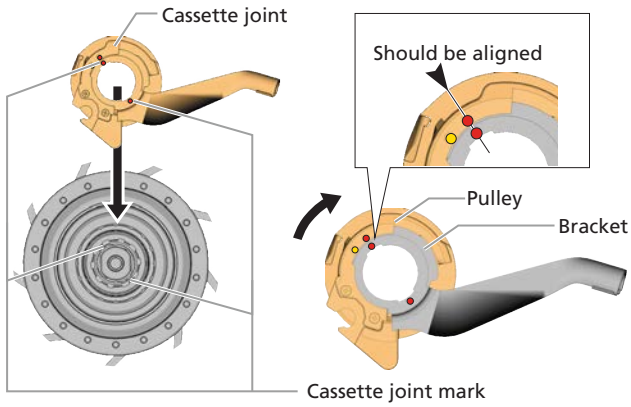

2. **Secure the cassette joint to the hub body with the cassette joint mounting ring.**
   (1) Align the mark (yellow) of the cassette joint and cassette joint mounting ring.
   (2) Turn the cassette joint mounting ring 45° clockwise to secure it.

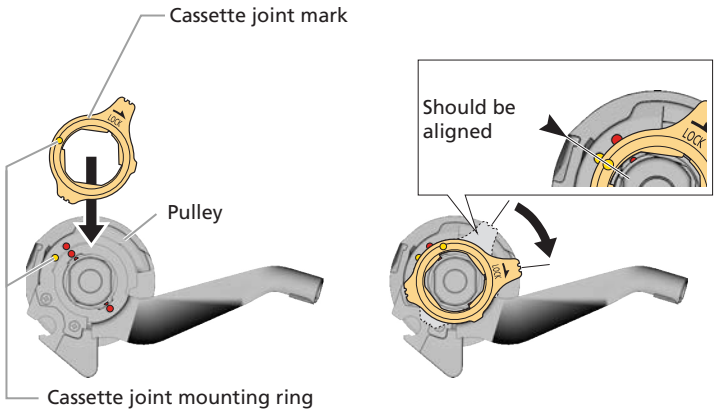

NOTICE

- Hold down the cassette joint bracket securely when performing work.

Installing the rotor

⚠ CAUTION

- Use gloves when handling the rotor. Failure to do so may result in cuts to your hands.

6-bolt type (with rotor lock washers)

1. **Place the rotor and rotor lock washers on to the hub, then temporarily fix them in place by tightening the rotor mounting screws.**

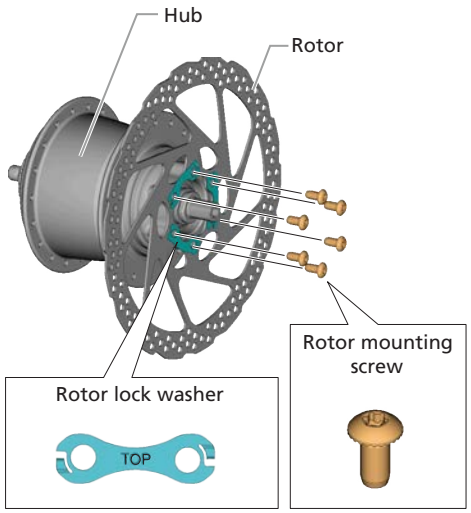

NOTICE

- Fit the rotor lock washers so that the marking "TOP" is visible.
- The rotor lock washers are not reusable. Always use new lock washers when installing the rotor.
- Use the dedicated rotor mounting screws.

2. **Wear gloves and turn the rotor clockwise with some force.**

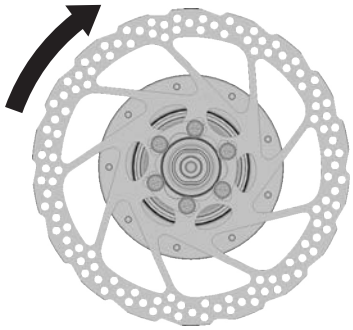

3. **Tighten the rotor mounting screws in the order shown in the figure.**

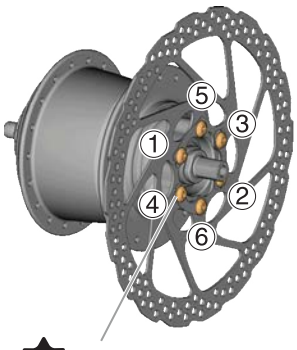

25 2 - 4 N·m
Rotor mounting screw

Installation of the hub to the frame

1. **Check the shape of the rear dropout, and select an appropriate rear dropout sleeve.**

TECH TIPS

- Use a rear dropout sleeve that matches the shape of the rear dropout.

Left side

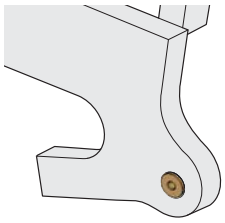

Right side

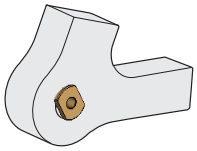

Left thru axle type		Right thru axle type			
		P 1.5 mm	P 1.0 mm	P 1.75 mm	UDH Standard
		 M12 x 1.5	 M12 x 1.0	 M12 x 1.75	
Flat type		X	X	X	X
Tapered type		-	X	-	X

2. **Check the rear dropout on the left side, then select an appropriate torque arm and mount adapter.**

TECH TIPS

- Use a torque arm and mount adapter that match the shape of the rear dropout and the size of the rotor.

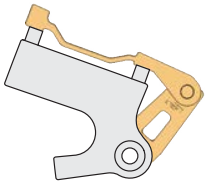

Torque arm / mount adapter		Angle		
		0°	20°	40°
				
Direct type	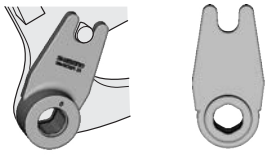	Direct type 0°	Direct type 20°	Direct type 40°
Mount adapter type	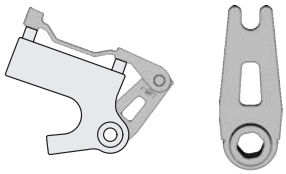	Mount adapter type 0°	Mount adapter type 20°	Mount adapter type 40°

Frame		Rotor	
		180 mm	203 mm
Post mount	160 mm direct	R180P/P	-
	180 mm direct	-	R203P/PM

Checking the torque arm

(1) Align the center of the torque arm check sheet with the center of the rear dropout.

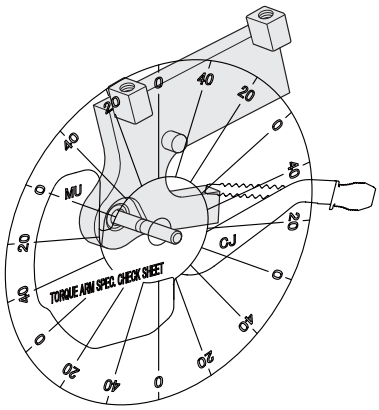

NOTICE

- Print the torque arm check sheet on a transparent film sheet before use.

(2) Rotate the torque arm check sheet, and ensure that the illustrations of the cassette joint and motor unit are in appropriate positions where they will not interfere with the frame.

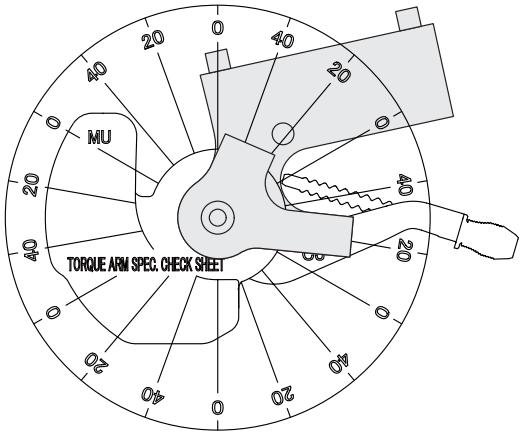

NOTICE

- Align the scale of the torque arm check sheet and the pin to determine the appropriate angle for the torque arm.

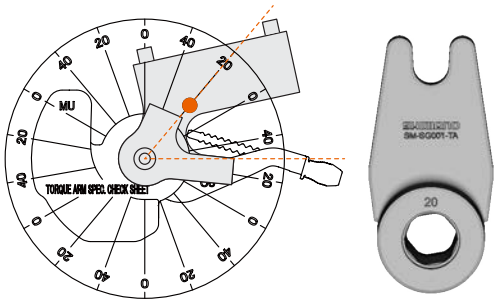

3. Install the mount adapter and brake caliper to the frame.

Readjust the position of the brake caliper after installing the rotor.

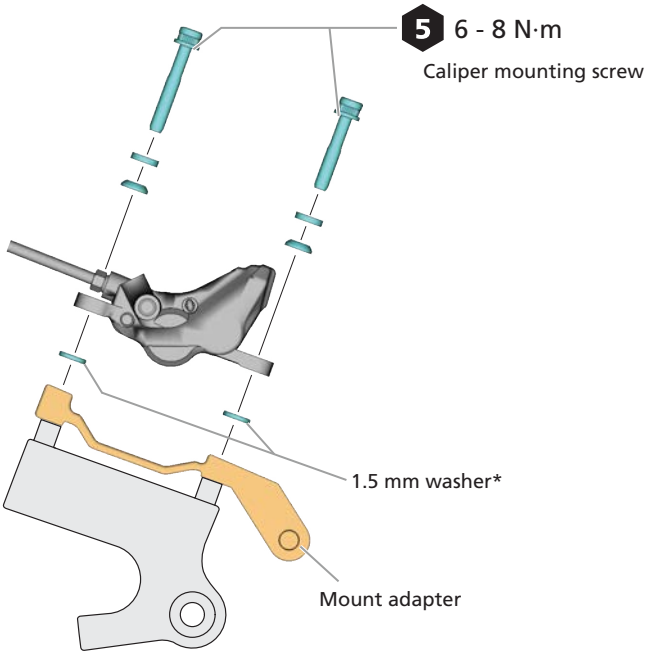

* Not used for the R180P/P.

NOTICE

- After securing the caliper mounting screws, secure the brake caliper with a snap ring, as indicated in the dealer's manual of the brake caliper.

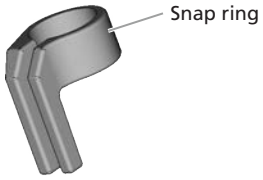

4. Insert the torque arm into the hub axle.

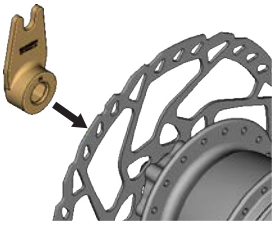

⚠ WARNING

- Ensure that the tip of the torque arm is securely installed to the pin. If it is not installed correctly, the hub axle may turn and break, causing the wheel to fall off, or the shifting cable may get caught and cause the handlebar where the shifter is installed to be pulled unexpectedly. This may cause you to fall off the bicycle which could result in serious injury.

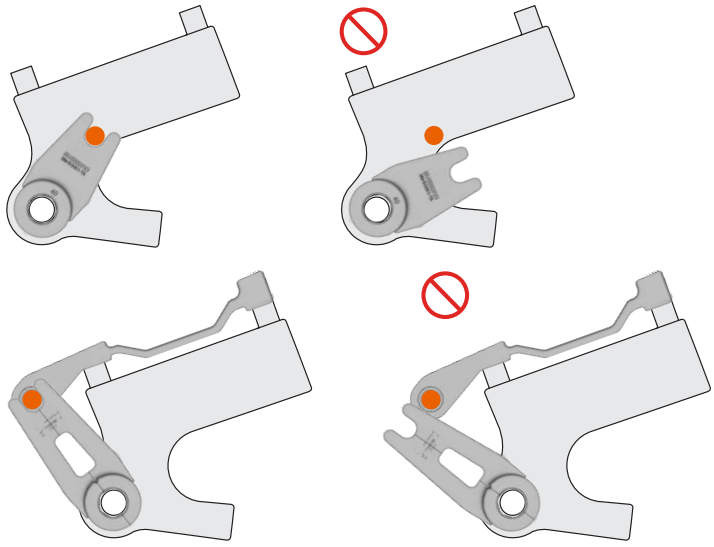

NOTICE

- Install the torque arm so that the angle of the motor unit and cassette joint from the pin matches that determined in the procedure for checking the torque arm.

Direct type

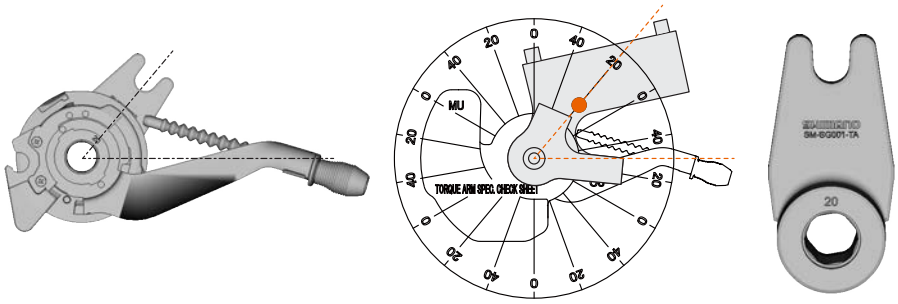

Mount adapter type

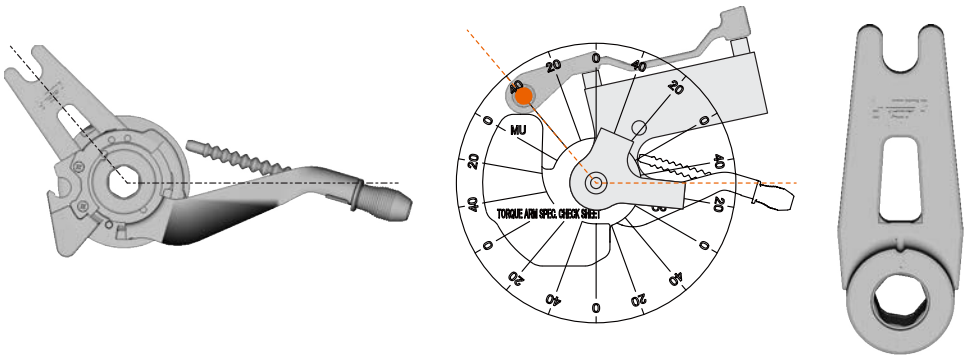

5. **Install the hub onto the frame.**

   Insert the left and right rear dropout sleeves determined in step 1 into the frame, then install the hub while aligning the torque arm with the rotation prevention pin.

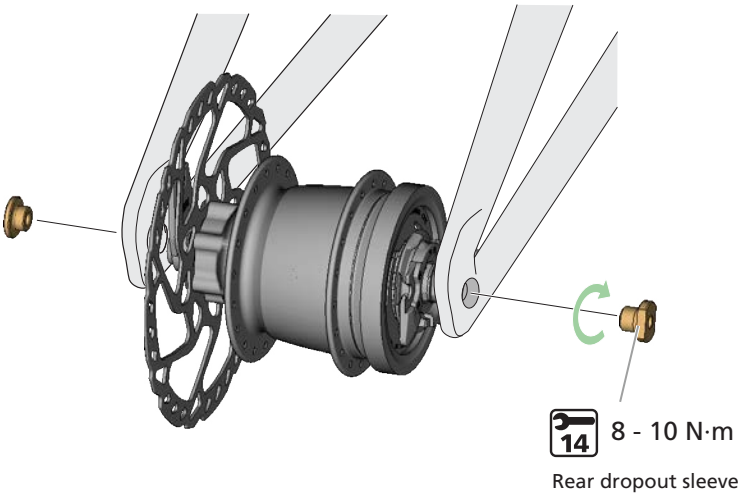

6. **Secure the hub.**

   Install the hub mounting screws to secure the hub.

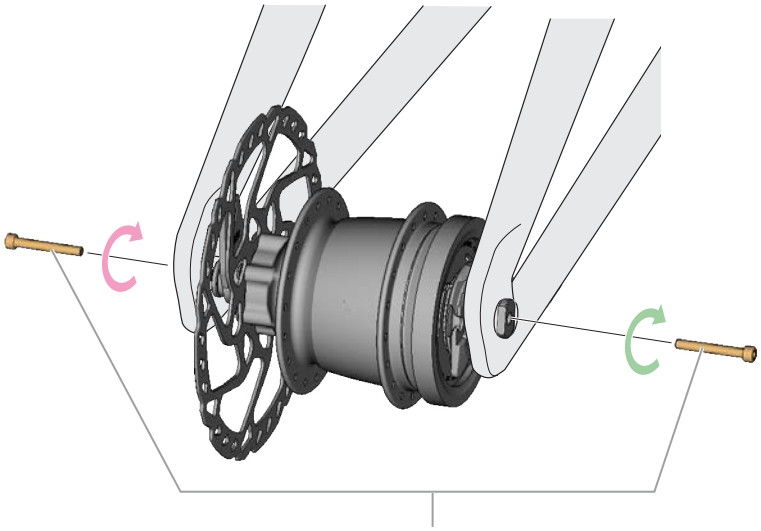

5 8 - 10 N·m
Hub mounting screw

Torque arm check sheet

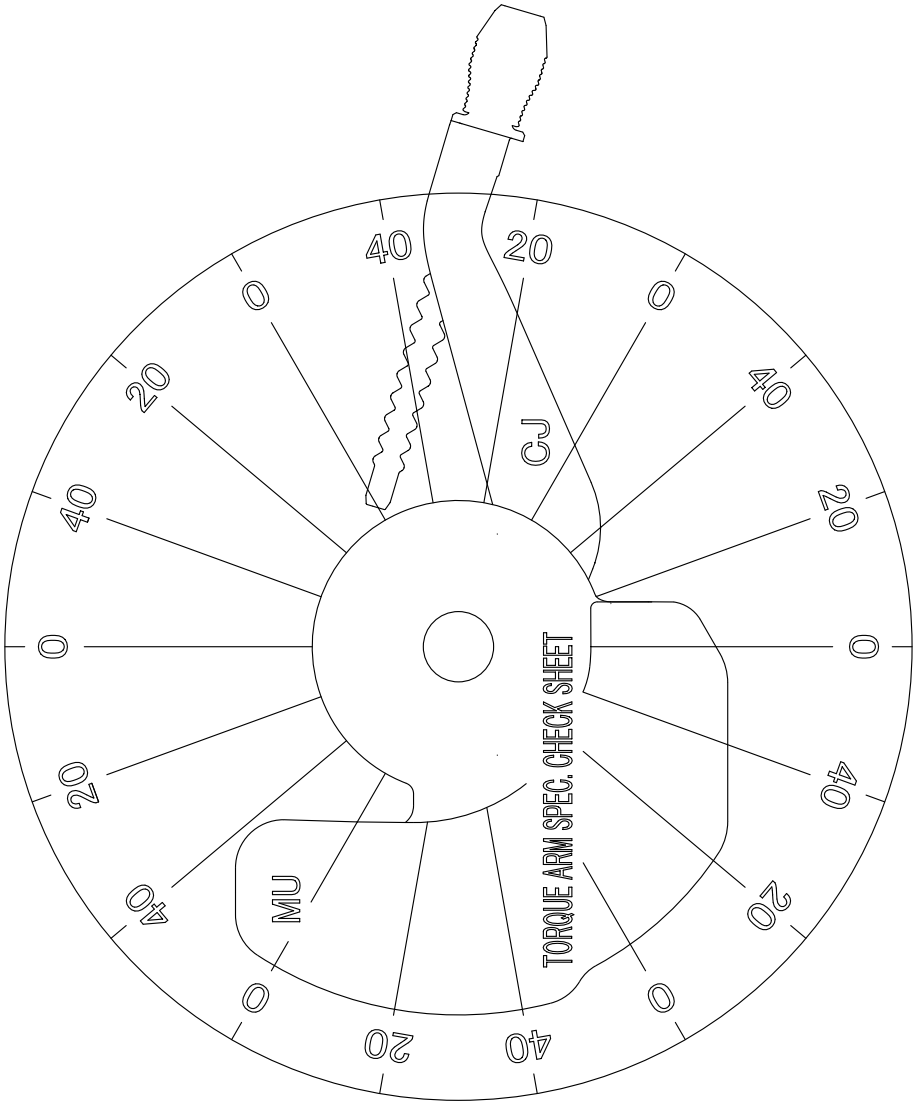

Installing the shifting cable

Shifter side

1. **Install the inner cable and outer casing aligned with the shifter.**
   For details, refer to the dealer's manual of the shifter .

NOTICE

- Make sure that the sealed outer cap is at the shifter end.

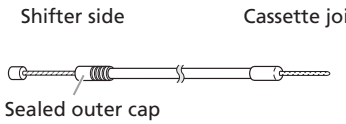

Cassette joint side

1. **Operate the shifter and set to the specified gear position.**
   SG-C7010 : 5-speed
2. **Install the rubber cover and rubber bellows to the outer casing holder body.**

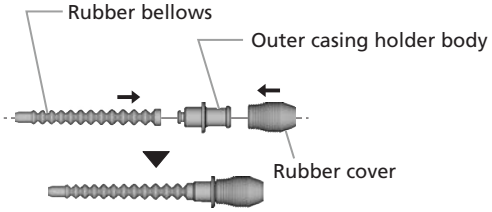

3. **Pass the inner cable through.**
   (1) Wipe away any grease which may be on the inner cable and, while holding the end of the rubber bellows, pass the inner cable through.
   (2) Insert the outer casing into the rubber cover and set it into the outer casing holder body. Push the outer casing so that it securely touches the outer casing holder body.

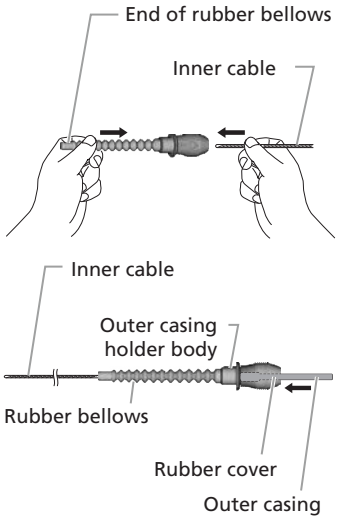

NOTICE

- Use a new inner cable; do not use a cable which has had its end cut off. Pay attention to the end of the inner cable.



4. Install the inner cable fixing bolt unit.

After checking that the end of the outer casing is securely set in the cable adjustment barrel of the shifter, secure the unit at the specified length while pulling the inner cable.

SG-C7010 (internal 5-speed): 145 mm

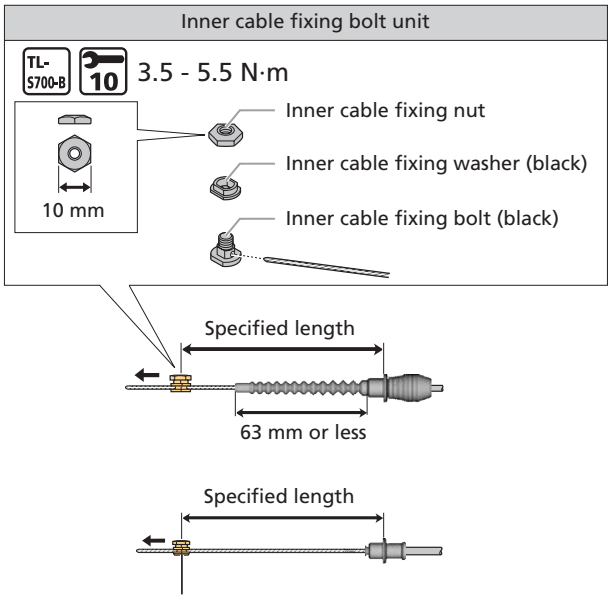

NOTICE

- Use the special inner cable fixing bolt unit.

TECH TIPS

- When installing the inner cable fixing bolt unit, use the setting tool TL-S700-B.

TL-S700-B (145 mm)

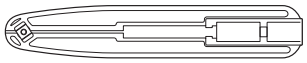

5. Secure the inner cable fixing bolt unit.

(1) Fit the inner cable fixing bolt unit into the notch in the pulley.

(2) Turn the cable 60° counterclockwise and attach it to the hook.

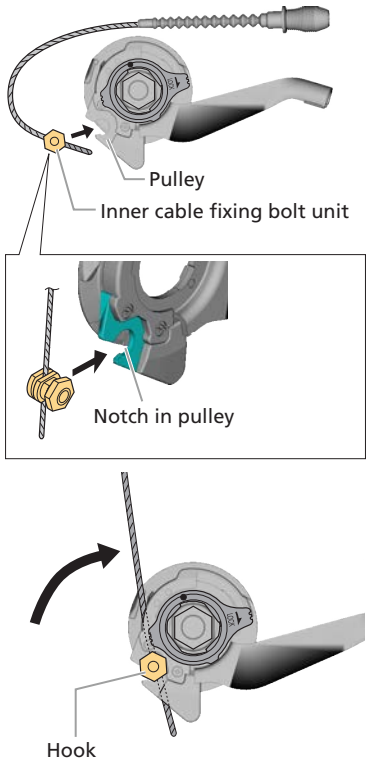

TECH TIPS

- The outer casing holder of the cassette joint can be installed first by turning the pulley of the cassette joint.

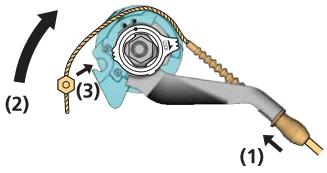

6. Secure the inner cable and outer casing.

Place the inner cable in the pulley as shown in the figure, insert the inner cable into the slit in the cassette joint bracket, then secure the outer casing holder in the outer casing holder section of the cassette joint.

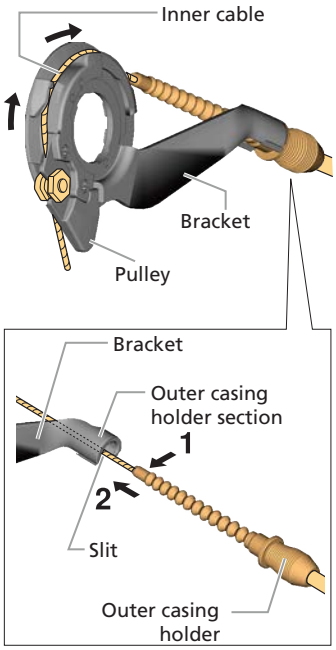

NOTICE

- Check that the inner cable is correctly seated inside the pulley guide.

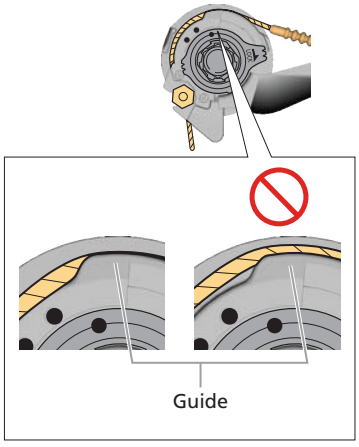

7. Secure the cable to the frame with the outer casing bands.

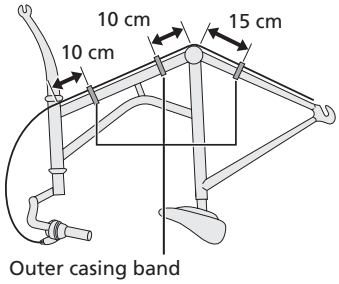

Adjustment

Adjusting the cassette joint

1. **Operate the shifter and set to the specified gear position.**

   SG-C7010 : 5-speed to 3-speed

NOTICE

- When setting, do so gradually and with minimal force so as to avoid over-shifting.If you over-shift, the setting line will not return to the proper position, and the setting lines may not be aligned at the correct position. (Refer to step 2)

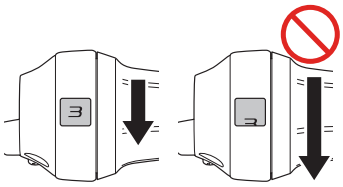

2. **Turn the cable adjustment barrel and align the setting lines.**

   Check that the yellow setting lines on the cassette joint bracket and pulley are aligned with each other. The yellow setting lines on the cassette joint are located in two places; above and below.

When the bicycle is upright

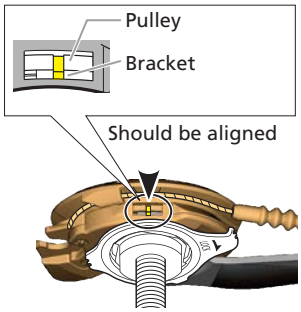

When the bicycle is upside down

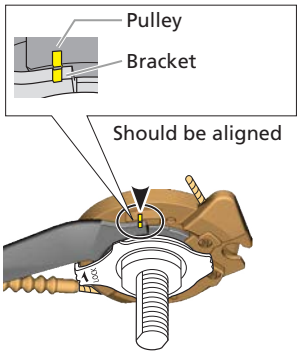

NOTICE

- If the area of the pulley and bracket marked by the setting line overlap by two thirds or less, the gears may not be properly engaged during pedaling, resulting in abnormal noise or free spinning of the pedals.

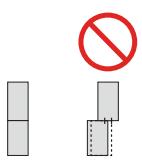

3. **Operate the shifter and recheck that the yellow setting lines are aligned.**

Operate the shifter again from step 1 to check.

4. Cut off the excess length of inner cable, then install the inner end cap.

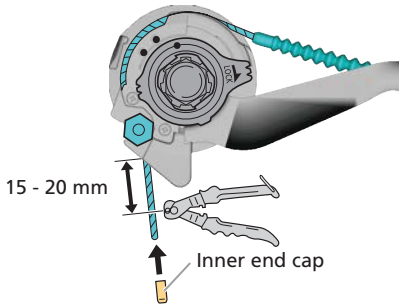

Maintenance

Disconnecting the shifting cable when removing the rear wheel from the frame

1. **Set the shifter to the specified gear.**
   SG-C7010 : 5-speed
2. **Pull the outer casing holder out from the outer casing holder section.**

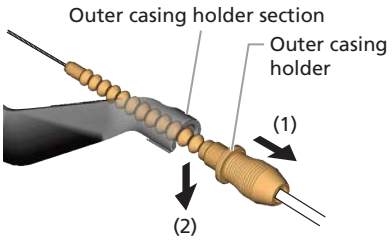

3. **Remove the inner cable from the pulley guide, and remove the inner cable fixing bolt unit.**

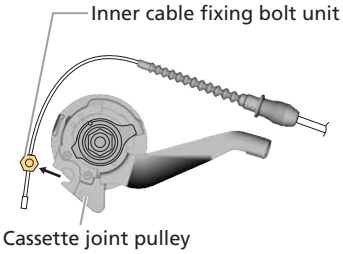

TECH TIPS

- If it is difficult to remove the shifting cable, the outer casing holder can be pulled out from the outer casing holder section of the cassette joint by turning the pulley of the cassette joint.

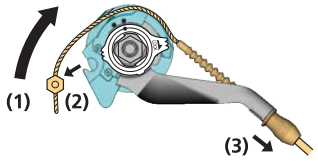

Oil maintenance of the internal unit

Oil Maintenance Kit: Y00298010

In order to maintain proper performance, it is recommended that you lubricate the internal unit once a year from the start of use (or once about every 2,000 km if the bicycle is used very frequently). If the bicycle is used under harsh conditions, more frequent maintenance is required.

Also, for carrying out maintenance, the use of SHIMANO internal geared hub grease or a lubrication kit is recommended. If SHIMANO grease or a SHIMANO lubrication kit is not used, problems such as a malfunction in the shifting unit may occur.

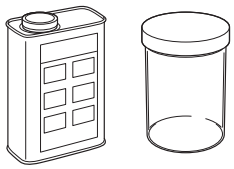

WB Maintenance Oil Set
(Y00298010)

1. **Fill the container with maintenance oil to a height of 95 mm.**

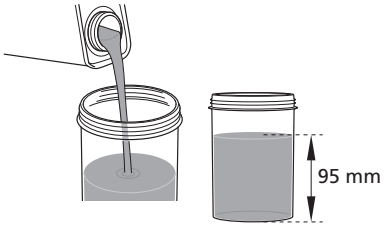

2. **Immerse the internal unit in the oil from the left side of the hub until the oil reaches up to ring gear 1, as shown in the figure.**

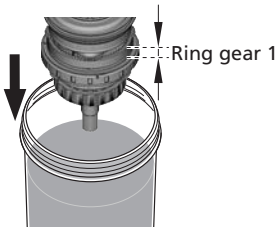

3. **Keep the internal unit immersed in oil for approximately 90 seconds.**

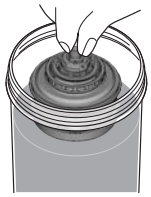

4. **Remove the internal unit from the oil.**

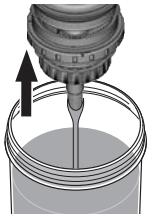

5. Let excess oil drain off for approximately 60 seconds.

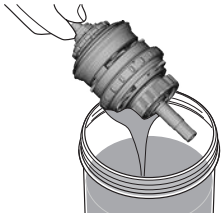

TECH TIPS

About maintenance oil

- Maintenance oil is reusable.
  Replenish as needed.
- Store it with the lid closed after usage.

NOTICE

- After oil maintenance, it is recommended that you apply Grease (Y04130100) to the ball retainers and pinion gears.

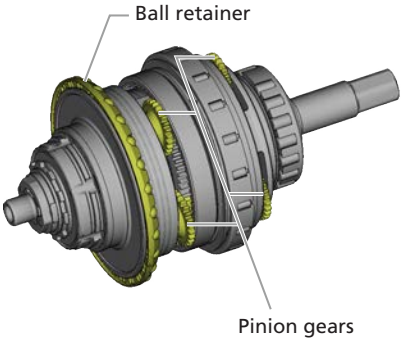

6. Reassemble the hub.

(1) Use the TL-SGN01 to adjust the left-hand cone until the hub shell rotates smoothly and the hub axle has no excess play.

(2) Use the TL-SGN01 to tighten the left-hand lock nut.



The image shows an example.

INTER 5 E

Dealer's Manual

SG-C7060-5D

Installation / removal

Installing the sprocket / belt pulley

1. **Install the right-hand dust cap, then set the sprocket / belt pulley.**

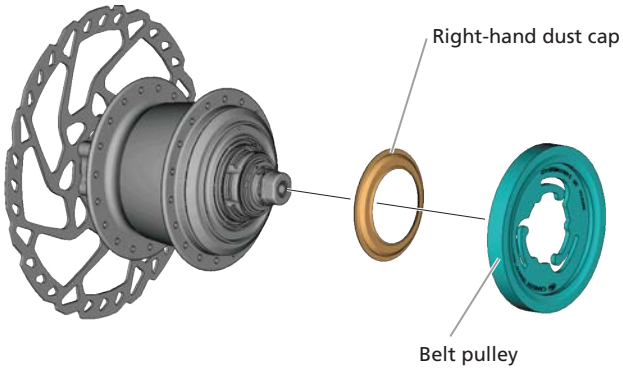

NOTICE

- Note the orientation of the right-hand dust cap, belt pulley, and sprocket.

  Belt pulley

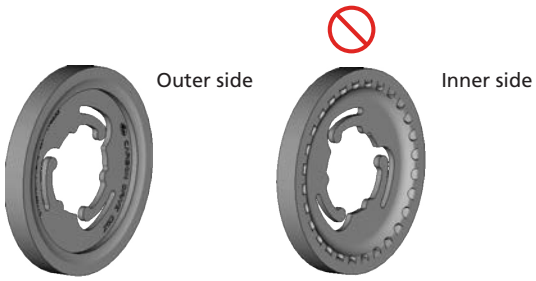

  Sprocket

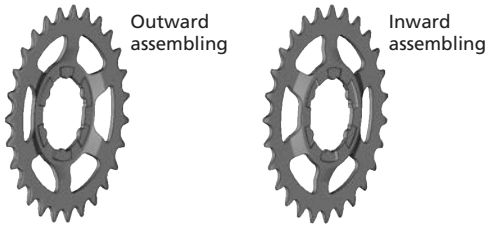

Applicable sprockets	
Outward assembling	Inward assembling
24T, 27T, 30T	24T, 27T, 30T

  Right-hand dust cap

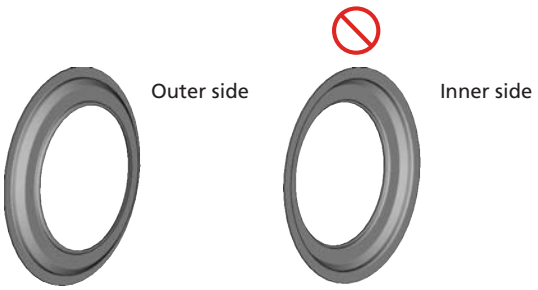

2. Set and tighten the lock ring.

Use the TL-SGL01 + TL-FC31 to secure it.

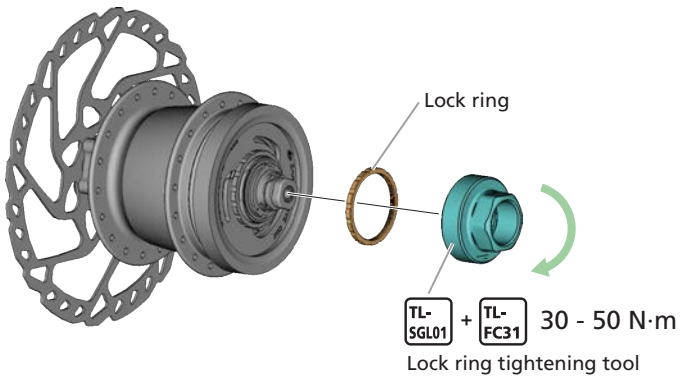

NOTICE

- Keep the TL-SGL01 perpendicular to the sprocket / belt pulley during use.

Installing the motor unit to the hub

1. **Confirm that the marks (red) on the right side of the hub body are aligned as indicated in the figure.**

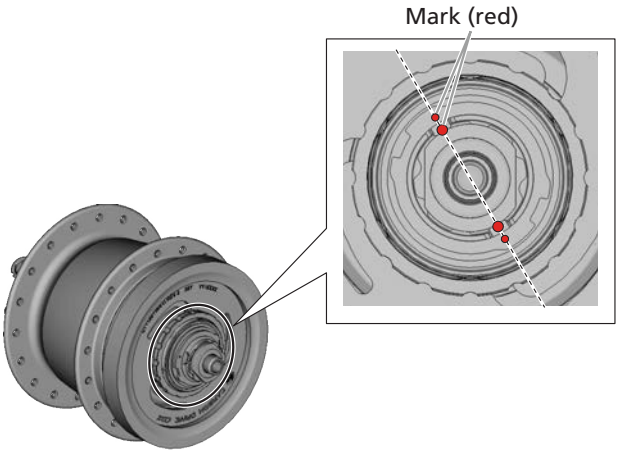

NOTICE

- If the marks are misaligned, adjust their positions as indicated in the figure below.

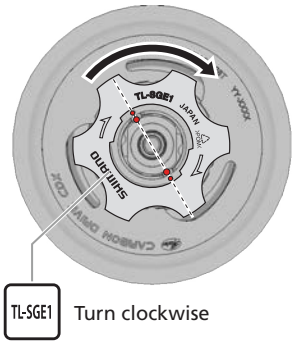

2. **Make sure that the two protrusions on the inside of the motor unit are at the initial positions (1-speed).**
   Confirm that the protrusions and marks are aligned.

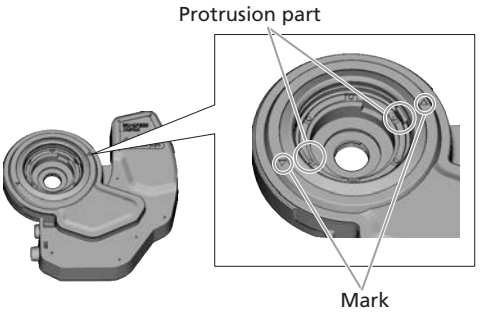

NOTICE

- If the motor unit is installed off the initial position, some gears may become unavailable and the hub or the motor unit may be damaged.

- The motor unit is set at the initial position when it is shipped; therefore, install it without changing the position. If the motor unit may not be at the initial position, push the button on the shifting down side of the shift switch four or more times to move the protrusions on the motor unit counterclockwise (check from the inside of the motor unit).
- Check the shifting up and down of the shift switch in advance as it may have been switched by customization.

3. Check that the rubber seal is attached.

If the rubber seal is not attached, attach as shown in the figure.

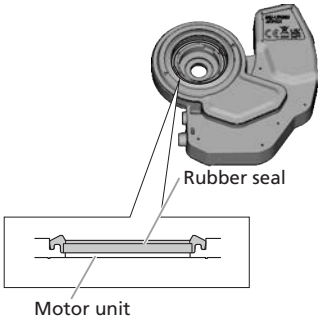

4. Install the motor unit to the hub securely.

(1) Install the motor unit to the hub so that the mark (silver) on the motor unit is aligned with the mark (red) on the lock spacer of the internal geared hub.

(2) Hold the motor unit, and gently turn it left and right to install it to the hub. Gently turning the motor unit to the left and right enables it to be securely installed as far as it will go.

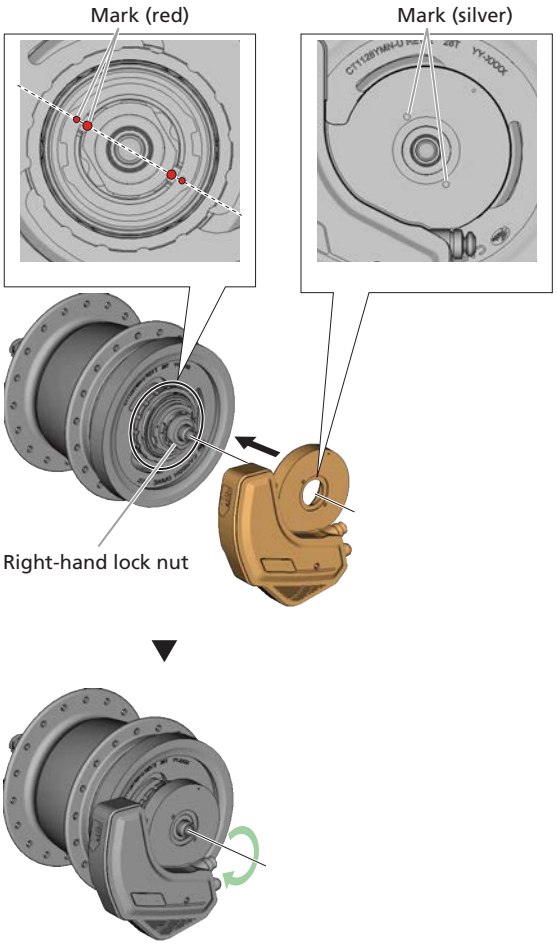

NOTICE

- Check that the guide of the right-hand lock nut is seated securely in the guide hole on the front of the motor unit.

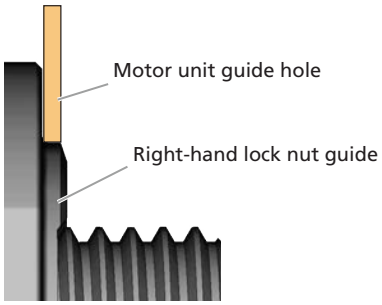

5. Secure the motor unit.

Install the L lock nut (left-hand thread) to secure the motor unit.

Dealer's Manual (SG-C7060-5D)

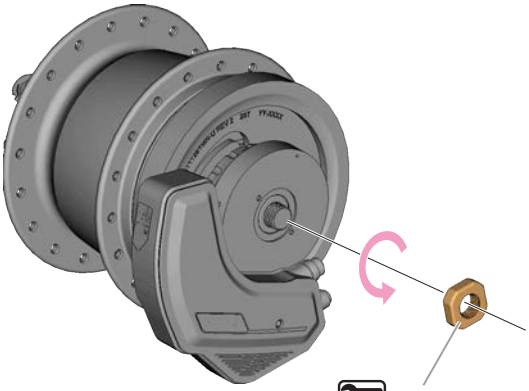

Installing the rotor

⚠ CAUTION

- Use gloves when handling the rotor. Failure to do so may result in cuts to your hands.

6-bolt type (with rotor lock washers)

1. **Place the rotor and rotor lock washers on to the hub, then temporarily fix them in place by tightening the rotor mounting screws.**

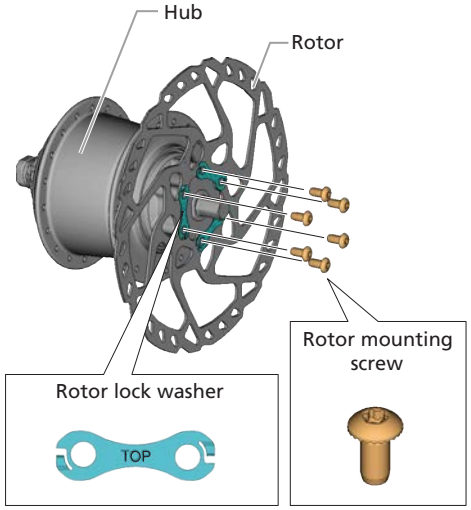

NOTICE

- Fit the rotor lock washers so that the marking "TOP" is visible.
- The rotor lock washers are not reusable. Always use new rotor lock washers when installing the rotor.
- Use the dedicated rotor mounting screws.

2. **Wear gloves and turn the rotor clockwise with some force.**

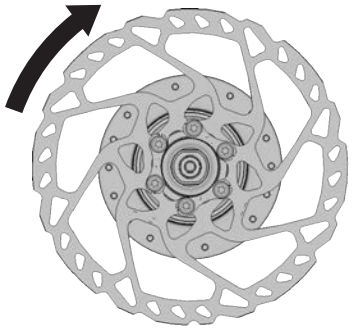

3. **Tighten the rotor mounting screws in the order shown in the figure.**



25 2 - 4 N·m
Rotor mounting screw

Installing the hub to the frame

1. **Check the shape of the rear dropout, and select an appropriate rear dropout sleeve.**

TECH TIPS

- Use a rear dropout sleeve that matches the shape of the rear dropout.

Left side

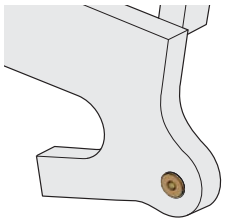

Right side

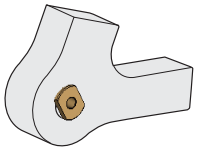

Left thru axle type		Right thru axle type			
		P 1.5 mm	P 1.0 mm	P 1.75 mm	UDH standard
		 M12 x 1.5	 M12 x 1.0	 M12 x 1.75	
Flat type		X	X	X	X
Tapered type		-	X	-	X

2. **Check the rear dropout on the left side, then select an appropriate torque arm and mount adapter.**

TECH TIPS

- Use a torque arm and mount adapter that match the shape of the rear dropout and the size of the rotor.

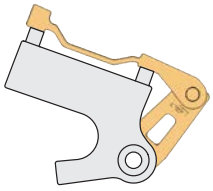

Torque arm / mount adapter		Angle		
		0°	20°	40°
				
Direct type	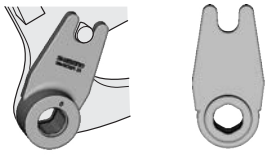	Direct type 0°	Direct type 20°	Direct type 40°
Mount adapter type	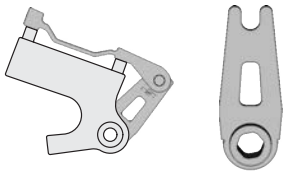	Mount adapter type 0°	Mount adapter type 20°	Mount adapter type 40°

Frame		Rotor	
		180 mm	203 mm
Post mount	160 mm direct	R180P/P	-
	180 mm direct	-	R203P/PM

Checking the torque arm

(1) Align the center of the torque arm check sheet with the center of the rear dropout.

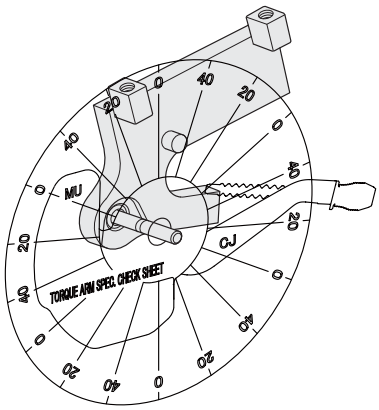

NOTICE

- Print the torque arm check sheet on a transparent film sheet before use.

(2) Rotate the torque arm check sheet, and ensure that the illustrations of the cassette joint and motor unit are in appropriate positions where they will not interfere with the frame.

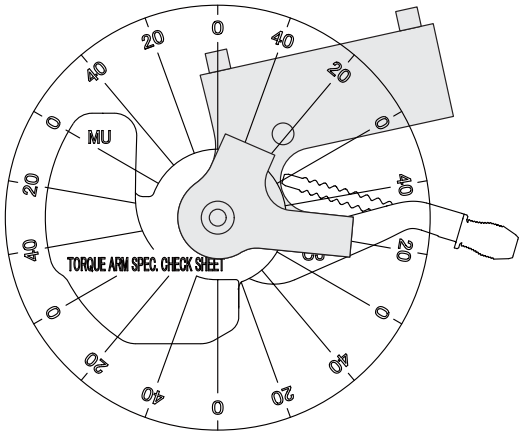

NOTICE

- Align the scale of the torque arm check sheet and the pin to determine the appropriate angle for the torque arm.

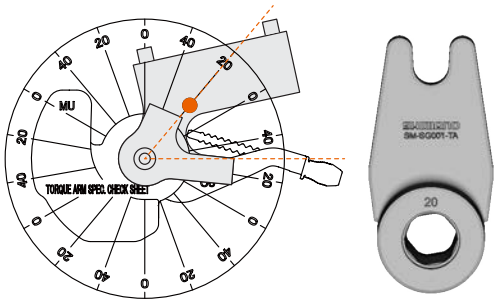

3. Install the mount adapter and brake caliper to the frame.

Readjust the position of the brake caliper after installing the rotor.

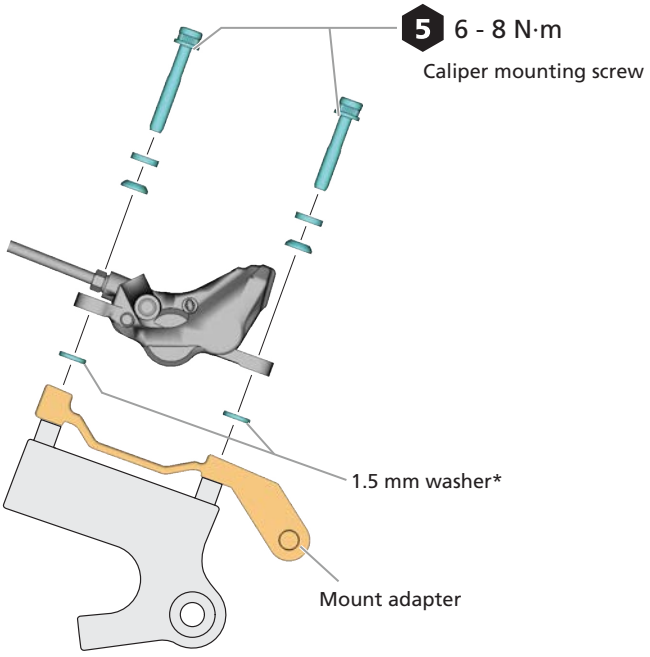

* Not used for the R180P/P.

NOTICE

- After securing the caliper mounting screws, secure the brake caliper with a snap ring, as indicated in the dealer's manual of the brake caliper.

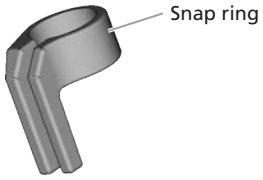

4. **Insert the torque arm into the hub axle.**

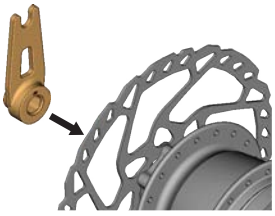

⚠ WARNING

- Ensure that the tip of the torque arm is securely installed to the pin. If it is not installed correctly, the hub axle may turn and break, causing the wheel to fall off, or the shifting cable may get caught and cause the handlebar where the shifter is installed to be pulled unexpectedly. This may cause you to fall off the bicycle which could result in serious injury.

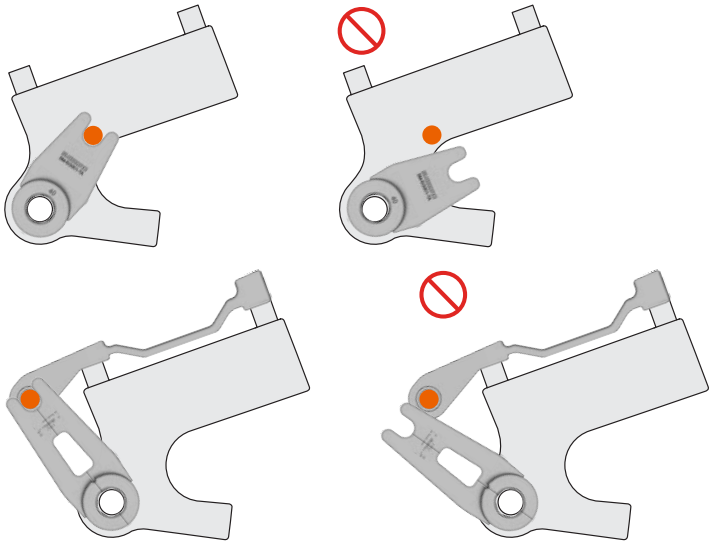

NOTICE

- Install the torque arm so that the angle of the motor unit and cassette joint from the pin matches that determined in the procedure for checking the torque arm.

Direct type

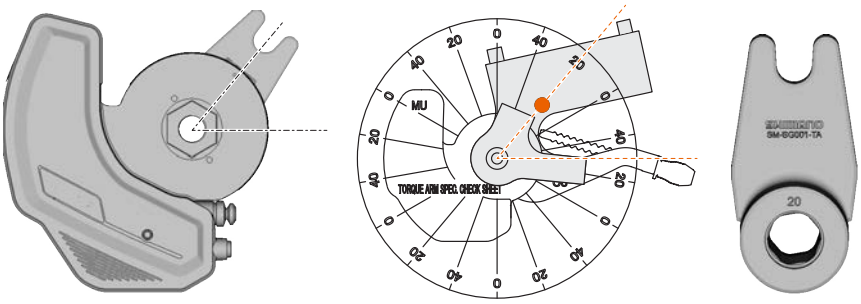

Mount adapter type

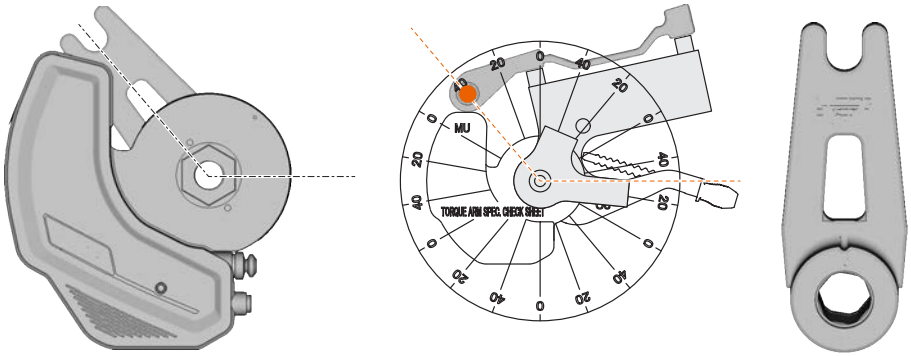

5. Install the hub onto the frame.

Insert the left and right rear dropout sleeves determined in step 1 into the frame, then install the hub while aligning the torque arm with the rotation prevention pin.

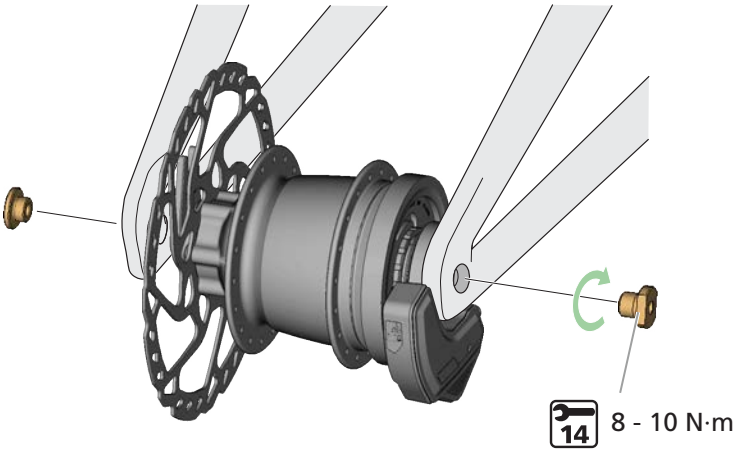

Rear dropout sleeve

6. Secure the hub.

Install the hub mounting screws to secure the hub.

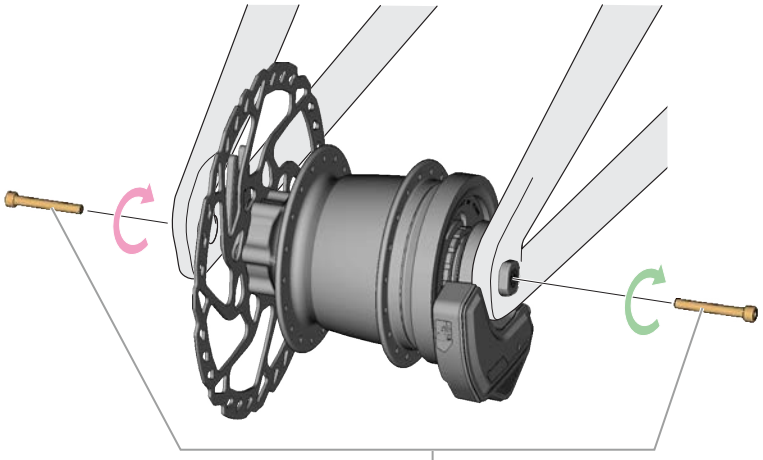

5 8 - 10 N·m
Hub mounting screw

Torque arm check sheet

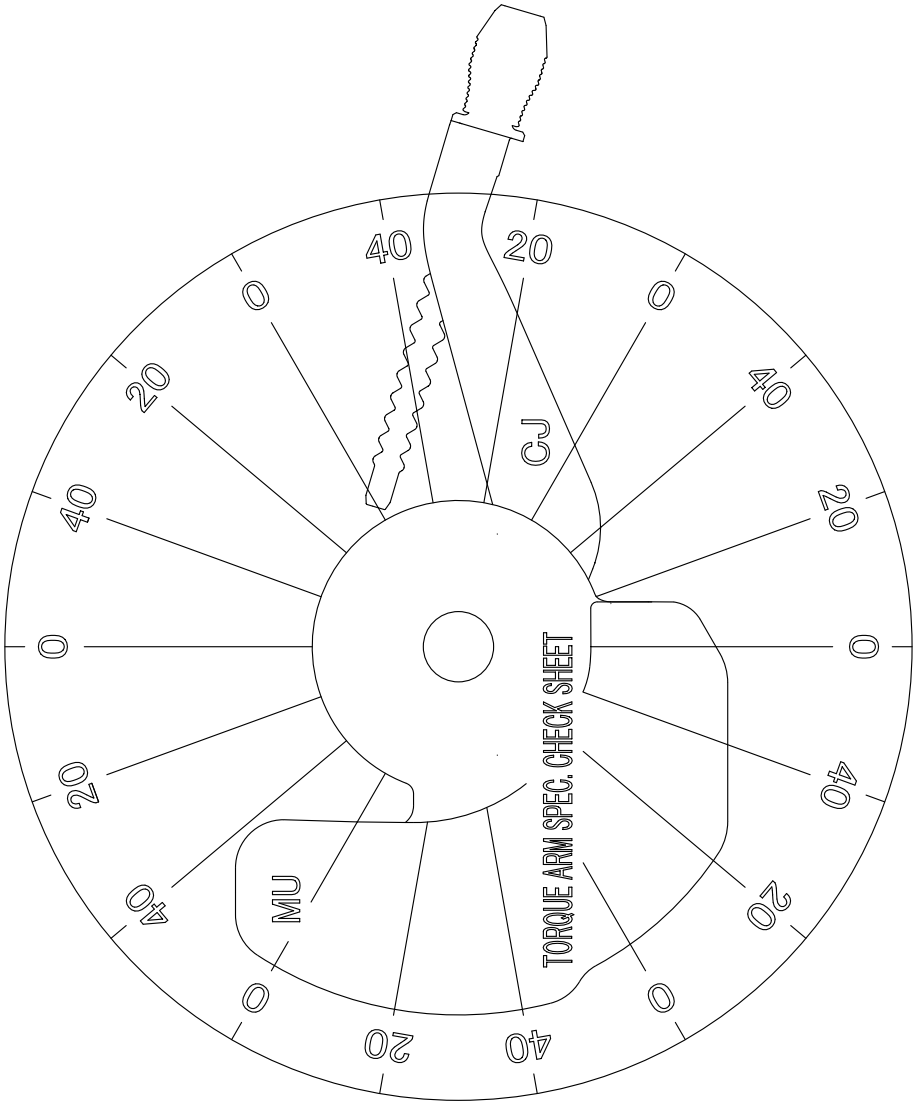

Electric wires

Be sure to use the SHIMANO original tool to remove and insert electric wires.

Connecting / disconnecting the electric wires

Be sure to use the SHIMANO original tool to connect and disconnect electric wires.

NOTICE

- When connecting and disconnecting electric wires, do not forcibly bend the plug part. It may result in a poor connection.

Connecting the electric wire

Connect the electric wire to the E-TUBE port.

1. **Set the plug of the electric wire to the TL-EW300.**

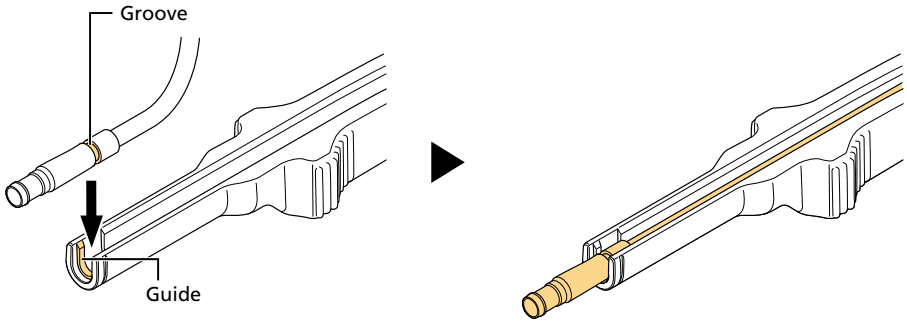

2. **Insert the plug on the electric wire into the E-TUBE port.**

   Push it straight in until you feel a click.

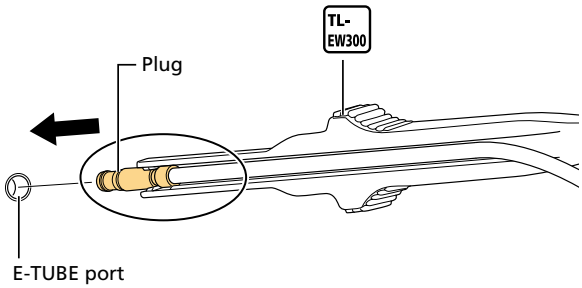

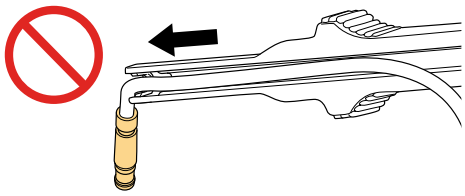

TECH TIPS

- You can use the TL-EW300 as indicated in the figure to install the electric wire.

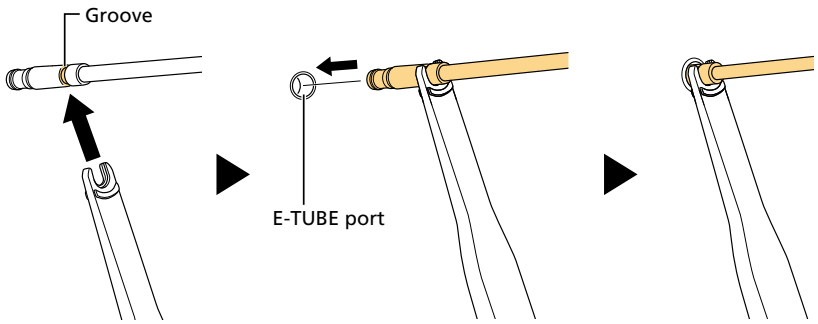

Disconnecting the electric wire

1. Disconnect the electric wire.

(1) Insert the TL-EW300 into the groove on the plug part of the electric wire.

(2) Disconnect the electric wire from the E-TUBE port.

* As shown in the figure, use part (A) of the TL-EW300 as a fulcrum, move the tool like a lever, then disconnect the plug part.

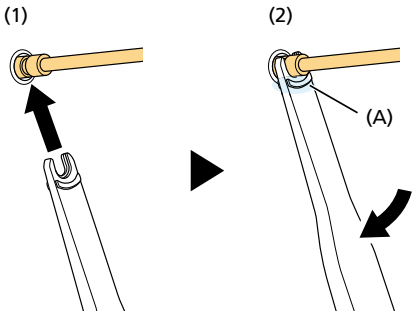

TECH TIPS

- If there is limited space to insert the tool, you can use the TL-EW300 as indicated in the figure to disconnect the electric wire.

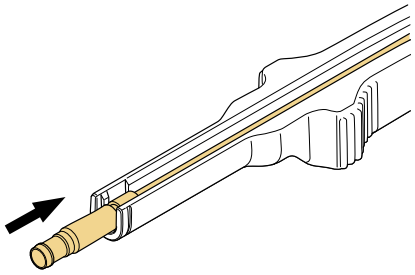

Connecting to the motor unit

MU-UR520

1. Prepare the electric wire to connect to the drive unit.

Pass the rubber cover included with the MU-UR520 from the tip of the electric wire on the motor unit side.

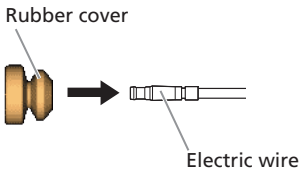

NOTICE

- When connecting to a BOSCH "The smart system" drive unit, use the EW-PS300 instead of an electric wire. For details, refer to the EW-PS300 dealer's manual .

2. **Connect the electric wire to the E-TUBE port of the motor unit, then move the rubber cover and connect it to the E-TUBE port.**

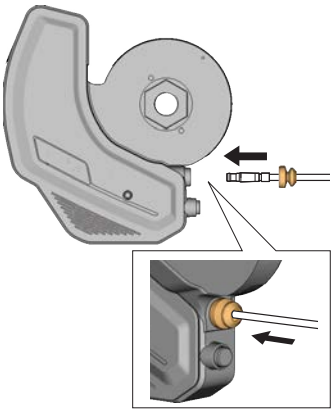

3. **After connecting the electric wires to all of the components, install the battery and check the operation.**
   Check that shifting of the rear can be performed properly by operating the shift switch.

MU-UR510

1. **Connect the electric wires to the motor unit and the battery mount.**

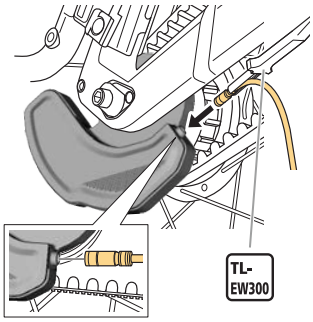

2. **Temporarily secure the electric wire along the frame with tape etc., and connect it to junction [B].**

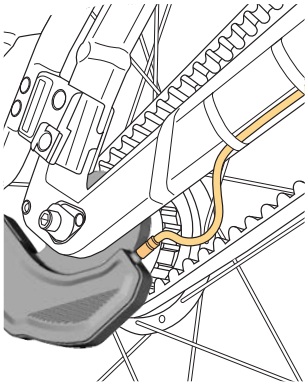

NOTICE

- When routing the electric wire to the motor unit, be sure to install it to the bottom of the chainstay to avoid any interference between the cable and the chain.
- If the motor unit is the MU-UR510 (EW-SD300 type), use the conversion adapter (EW-AD305) to connect the EW-SD50 and EW-SD300, and connect them to junction [B].

3. Install the electric wire cover / cord cover onto the frame.

In order to make sure that the electric wire cover / cord cover is securely attached, clean the frame with alcohol or some other cleaning agent to remove any grease or other substances before installing the cover. Place the electric wire cover / cord cover over the electric wires, then attach it to the frame.

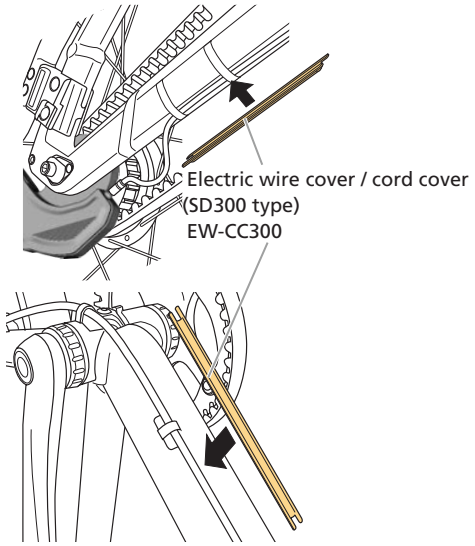

4. After connecting the electric wires to all of the components, install the battery and check the operation.

Check that shifting of the rear can be performed properly by operating the shift switch.

Connection and communication with devices

Wireless function (MU-UR520)

The MU-UR520 supports Bluetooth ® LE and ANT ® and can send information such as the current gear position to an external device.

Connection method

ANT ® connection	Turn the power of the bicycle ON to receive communication. Switch the external device to connection mode then connect it.
Bluetooth ® LE connection	Be sure to switch the external device to connection mode ahead of time. This product receives communication in the following cases: For 30 seconds after the power of the bicycle is turned ON For 30 seconds after the function button is pressed

E-TUBE application

E-TUBE PROJECT Cyclist can be used if a Bluetooth ® LE connection is established between the MU-UR520 and a smartphone. E-TUBE RIDE can be used to check traveling data on a smartphone connected over Bluetooth ® . For information on how to install E-TUBE PROJECT Cyclist, check the support website (https://bike.shimano.com/e-tube/project.html). SHIMANO E-BIKE SYSTEMS enables the entire bicycle to be connected with E-TUBE PROJECT Professional. For details, refer to the SHIMANO E-BIKE SYSTEMS Cycle Computer and Switch Unit Parts Dealer's Manual (Gen.2) (https://si.shimano.com/dm/SCSW002/).

Pairing for wireless shifting (MU-UR520)

To use the MU-UR520 with wireless shifting, it must be paired with a shift switch. Pairing can be performed by operating the shift switch and MU-UR520 or by using E-TUBE PROJECT. The method for pairing by operating the shift switch and MU-UR520 is described here.

NOTICE

- Do not operate another shift switch while pairing the motor unit with a shift switch. Doing so may unintentionally cause pairing with the other shift switch.
- Do not turn on the power of a bicycle with a motor unit that has not been paired while pairing the motor unit with a shift switch. The shift switch may be unintentionally paired with another motor unit.
- If an unintended combination of products is paired, cancel pairing in E-TUBE PROJECT, then perform pairing again. For details on canceling pairing, refer to the following:
  * E-TUBE PROJECT Professional User's Manual
    (https://si.shimano.com/um/7J4WA/adding_information_manually)
  * E-TUBE PROJECT Cyclist User's Manual
    (https://si.shimano.com/um/7J4MA/scanning_qr_code)

TECH TIPS

- The MU-UR520 can be paired with only one shift switch on each side (-L/-R). To pair it with another shift switch, the existing pairing must be canceled. Pairing can be canceled from E-TUBE PROJECT.
- For details on pairing using E-TUBE PROJECT, refer to the following:
  * E-TUBE PROJECT Professional User's Manual
    (https://si.shimano.com/um/7J4WA/PAIRING_PROCESS)
  * E-TUBE PROJECT Cyclist User's Manual
    (https://si.shimano.com/um/7J4MA/PAIRING_PROCESS)

1. **Turn the power of the bicycle ON.**
   Refer to the manual describing the power operations of the E-BIKE, such as the SHIMANO E-BIKE SYSTEMS user's manual.
2. **Press and hold X and Y together on the shift switch until the LED of the motor unit lights up blue.**

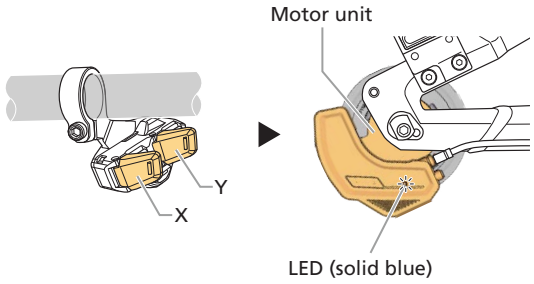

TECH TIPS

- The location and position of X and Y differ according to the shift switch. Refer to the user's manual of the shift switch for details.

3. **Press and hold X and Y together on the shift switch again while the LED of the motor unit is blue.**
   Remove your fingers from X and Y after confirming that the LED of the motor unit quickly flashes blue then returns to steady blue.
4. **Press the function button of the motor unit. When the LED flashes green several times, pairing is complete.**
   After pairing, operate the shift switch to confirm that the motor unit functions normally.

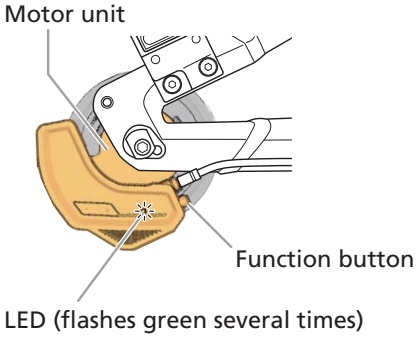

Pairing with BOSCH "The smart system" (MU-UR520)

When using a BOSCH "The smart system" drive unit, you must pair the motor unit with BOSCH "The smart system." For information on how to perform pairing and details on the procedure, refer to SHIMANO Di2 System and BOSCH "The smart system" Pairing Guide .

Maintenance

Adjusting the motor unit

Performing adjustment from E-TUBE PROJECT Professional

For the latest information on E-TUBE PROJECT Professional, check https://bike.shimano.com/e-tube/project.html .

⚠ CAUTION

- Improper adjustment may cause gear engagement skipping, resulting in an accidental fall.
- Perform adjustment only when you have an unusual feel during shifting. If there is no problem with shifting, unnecessary adjustment may worsen shifting performance.

1. **Download the latest version of E-TUBE PROJECT Professional from the support website. (** https://bike.shimano.com/e-tube/project.html **)**
2. **Use the SM-PCE02 to connect the bicycle (system or component) to the PC.**
3. **Perform adjustment in E-TUBE PROJECT Professional.**

   For the adjustment procedure, refer to the user's manual for E-TUBE PROJECT Professional. (https://si.shimano.com/um/7J4WA/gearbox_adjustment)
4. **Finally, ride the bicycle to check whether there is no problem.**

Performing adjustment from E-TUBE PROJECT Cyclist

For the latest information on E-TUBE PROJECT Cyclist, check https://bike.shimano.com/e-tube/project.html .

⚠ CAUTION

- Improper adjustment may cause gear engagement skipping, resulting in an accidental fall.
- Perform adjustment only when you have an unusual feel during shifting. If there is no problem with shifting, unnecessary adjustment may worsen shifting performance.

1. **Download E-TUBE PROJECT Cyclist.**
2. **Connect with the smartphone via Bluetooth ® LE.**
3. **Perform adjustment in E-TUBE PROJECT Cyclist.**

   For the adjustment procedure, refer to the user's manual for E-TUBE PROJECT Cyclist. (https://si.shimano.com/um/7J4WA/gearbox_adjustment)
4. **Finally, ride the bicycle to check whether there is no problem.**

For an E-BIKE

If a cycle computer is installed to the bicycle with SHIMANO E-BIKE SYSTEMS, adjustment can be performed from the cycle computer. For details, refer to the SHIMANO E-BIKE SYSTEMS Cycle Computer and Switch Unit Parts Dealer's Manual (Gen.2) (https://si.shimano.com/dm/SCSW002/). If a cycle computer is not installed to the bicycle with SHIMANO E-BIKE SYSTEMS or a cycle computer is connected to a drive unit from another manufacturer,

refer to " Performing adjustment from E-TUBE PROJECT Professional " or " Performing adjustment from E-TUBE PROJECT Cyclist ", depending on the specifications of the component you are using.

Oil maintenance of the internal unit

Oil Maintenance Kit: Y00298010

In order to maintain proper performance, it is recommended that you lubricate the internal unit once a year from the start of use (or once about every 2,000 km if the bicycle is used very frequently). If the bicycle is used under harsh conditions, more frequent maintenance is required.

Also, for carrying out maintenance, the use of SHIMANO internal geared hub grease or a lubrication kit is recommended. If SHIMANO grease or a SHIMANO lubrication kit is not used, problems such as a malfunction in the shifting unit may occur.

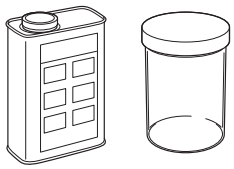

WB Maintenance Oil Set
(Y00298010)

1. **Fill the container with maintenance oil to a height of 95 mm.**

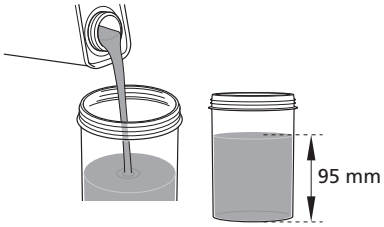

2. **Immerse the internal unit in the oil from the left side of the hub until the oil reaches up to ring gear 1, as shown in the figure.**

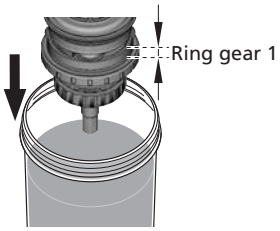

3. **Keep the internal unit immersed in oil for approximately 90 seconds.**

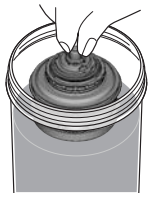

4. **Remove the internal unit from the oil.**

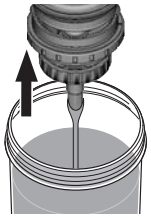

5. Let excess oil drain off for approximately 60 seconds.

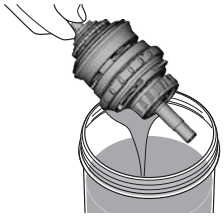

TECH TIPS

About maintenance oil

- Maintenance oil is reusable.
  Replenish as needed.
- Store it with the lid closed after usage.

NOTICE

- After oil maintenance, it is recommended that you apply Grease (Y04130100) to the ball retainers and pinion gears.

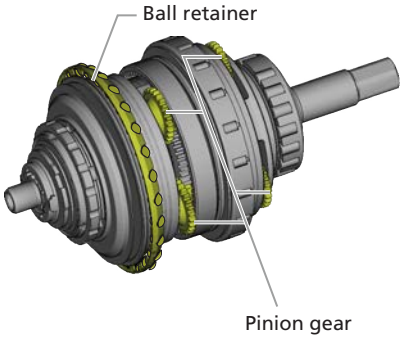

6. Reassemble the hub.

(1) Use the TL-SGN01 to adjust the left-hand cone until the hub shell rotates smoothly and the hub axle has no excess play.

(2) Use the TL-SGN01 to tighten the left-hand lock nut.



The image shows an example.

Troubleshooting

Troubleshooting

Check the following prior to performing adjustment or maintenance.

• All of the following occurrences are due to the internal gear-shifting structure and are not the failure of the internal components.

Phenomenon	Type of hub		Gear positions where phenomenon might occur
	For coaster brakes	For roller brakes/ V-BRAKE	
Noise occurs when the pedals rotate.	X	-	All gear positions except 1st
Noise occurs when the bicycle is pushed backward.	X	X	All gear positions except 1st
The hub has a built-in mechanism that supports gear shifting* and when the mechanism operates during gear shifting, noise and vibrations occur.	X	X	All gear positions
Depending on gear position, gear-shifting may feel different.	X	X	All gear positions
Noise occurs when pedal rotation is stopped during riding.	X	-	All gear positions

*Gear Change Support

SHIMANO gear change support mechanism utilizes some portion of pedaling force at down shifting. The result is a quick and precise downshift with very light feeling on both mechanical and DI2 version of the hub.

40% less shifting force required

Pedaling force is applied against the sleeve to help overcome sleeve return pressure and execute the shift.

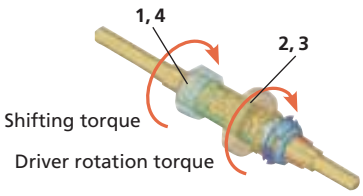

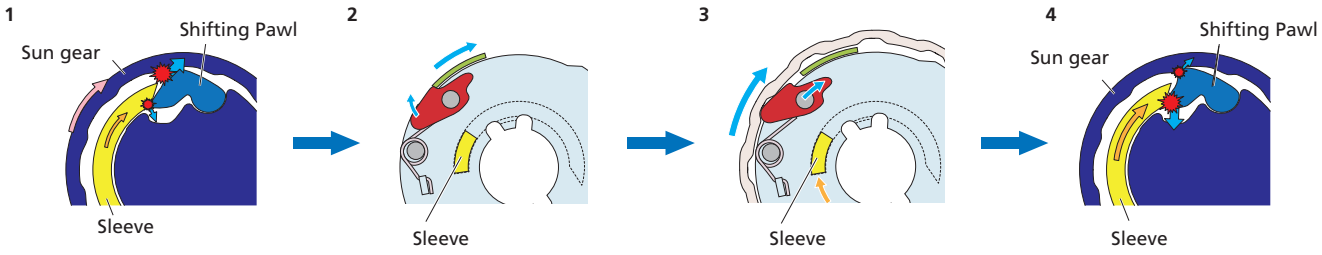

NOTICE

• If you cannot determine a definite cause for the malfunction, it is recommended to replace the internal assembly. (Refer to p.108,130)

Troubleshooting

	Symptom/cause				Solution	Reference page
Gear shifting	Gear shifting is poor.	The cable has been routed inappropriately.			Check for any areas where the curvature of the cable is too tight. When using a SHIMANO genuine outer casing, the recommended minimum curvature is R30 mm.	–
		Cable performance is poor.			Using a SHIMANO genuine cable/outer casing may improve this.	–
		The cassette joint was adjusted while over-shifted.			Set the gear to 3rd from 5th. Adjust the cassette joint again. To avoid over-shifting the shifting lever, change the setting gradually and with minimal force.	P.24, 67
	Gear shifting is impossible.	The cable was not adjusted properly.			Turn the cable adjustment barrel on the REVOSHIFT lever and align the bracket on the cassette joint with the setting line on the pulley.	P.24, 67
		Check whether gear shifting is possible with the wheel removed from the frame.	Possible	The wheel was not installed properly to the frame.	Recheck the procedure for installing the hub to the frame.	P.11, 56
			Not possible	There is a malfunction in the shifting lever.	Replace the lever with a new one.	P.18, 63
				There is a malfunction in the hub.	If something is broken inside, replace the broken part or unit. If nothing is broken or if you are unsure, replace the internal assembly.	P.108, 130
Abnormal noise	There is an abnormal noise.	The cable was not adjusted properly.			Set the gear to 3rd from 5th. Turn the cable adjustment barrel on the REVOSHIFT lever and align the bracket on the cassette joint with the setting line on the pulley.	P.24, 67
	The abnormal noise does not stop even after adjusting the cable.	During gear shifting.			Replace the internal assembly.	P.108, 130
		When pedaling.			If something is broken inside, replace the broken part or unit. If nothing is broken or if you are unsure, replace the internal assembly.	P.108, 130
When riding	The display on the indicator on the lever differs from the gear position of the hub.	The cable was not adjusted properly.			Set the gear to 3rd from 5th. Turn the cable adjustment barrel on the REVOSHIFT lever and align the bracket on the cassette joint with the setting line on the pulley.	P.24, 67
		Internal unit failure.			If something is broken inside, replace the broken part or unit. If nothing is broken or if you are unsure, replace the entire internal unit.	P.108, 130
	The hub is difficult to rotate, or does not rotate smoothly.	The cone is too tight.			Adjust the stop nut so that the hub shell can be turned smoothly without any gap. After adjusting, secure the stop nut with the locknut.	P.126, 152
		Internal unit failure.			If something is broken inside, replace the broken part or unit. If nothing is broken or if you are unsure, replace the entire internal unit.	P.108, 130
	There is rattling when pedaling.	The area around the cone is damaged.			Replace the right-hand cone and driver unit.	P.116, 140
When not riding	Free rotation is not smooth while not pedaling.				Replace the shell, ball retainer and driver unit.	P.109, 113, 116, 131, 137, 140

Troubleshooting

The following items are for coaster brake models.

	Symptoms	Solution	Reference page
Brakes	The brakes are too sensitive.	Apply grease or replace the brake shoe unit	P.111, 135
	The brakes are weak.	Replace the brake shoe unit. If this does not resolve the issue, replace the internal assembly.	P.108, 111, 130, 135
	The pedal rotation angle is too large until the brakes are applied.	Replace the brake shoe unit. If this does not resolve the issue, replace the internal assembly.	P.108, 111, 130, 135
	The wheels lock when the bicycle is pushed backward.	If something is broken inside, replace the broken part or unit. If nothing is broken or if you are unsure, replace the internal assembly.	P.108, 130
	Applying the brakes causes an abnormal noise.	Apply grease or replace the brake shoe unit.	P.111, 135
	Rotation feels heavy during free rotation.	Replace the brake shoe unit.	P.111, 135

Disassembly & Assembly

Required Tools & Parts

A: Hammer
B: TL-C7001
C: TL-S702
D: Slotted Screwdriver
E: TL-7S20 Hub spanners 17 mm×22 mm (2 pcs.)
F: Cassette joint CJ-C7000



NOTICE

- For internal assembly replacement, only tool "e" is necessary.
- For disassembling/assembling the internal assembly, all tools ("a" through "f") are necessary.
- When assembling or disassembling the internal unit, use a new E-ring. The E-ring is not reusable once removed.
- When disassembling/assembling the internal assembly, work will be easier if a shifting lever compatible with the cassette joint is connected.

Replacing the Internal Assembly

Refer to the part breakdown (p. 161) for the names of parts.

1. Hold the two beveled surfaces of the hub axle on the brake arm side in a vise and remove the dust cap.



NOTICE

- Forcibly pulling it may cause damage to the bracket cover because of its material properties.
- Do not damage the threads of the hub axle.

2. Remove the lock nut and stop nut.

(1) Secure the hub back into place with the drive side downward.
(2) Use TL-7S20 to remove the nut.





Locknut 17mm (Y-35P 28000)



Stop Nut 22mm (Y-35P 22000)

3. Remove the brake arm unit and ball retainer from the hub axle.





Replacing the Internal Assembly

4. **Remove the hub shell.**



5. **The internal assembly can be replaced.**



Disassembling the Internal Assembly

Installing the cassette joint

With the brake arm facing downward, pinch the flat portion of the axle with a vise, and secure the internal assembly in place.

1. Set the cassette joint.

(1) Turn the cassette joint pulley in the direction of the arrow to align the red● marks on the pulley and the bracket.

(2) Install it with the red● marks on the cassette joint aligned with the red● marks on the right side of the hub body.

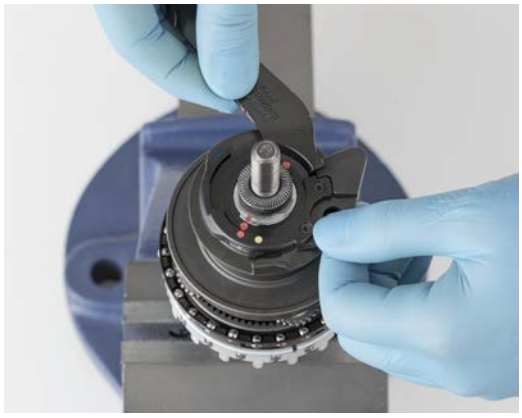

2. When installing the cassette joint mounting ring, align the yellow ● mark with the yellow ● mark on the pulley of the cassette joint.



3. Turn the cassette joint mounting ring 45° clockwise.

Hold down the bracket securely when performing work.



Disassembling the Internal Assembly

When disassembling or assembling the internal assembly, turn the cassette joint until it makes contact and ensure that the unit is in 1st gear (the tabs on the hub axle are folded down) before working. It will be easier to keep the unit in 1st gear if you connect a compatible shifting lever.



1. Remove the brake shoe unit.

With the drive side facing downward, use a vise to secure the internal assembly in place.



2. Remove the O-ring.

Later steps may still be performed even if the O-ring is not removed.

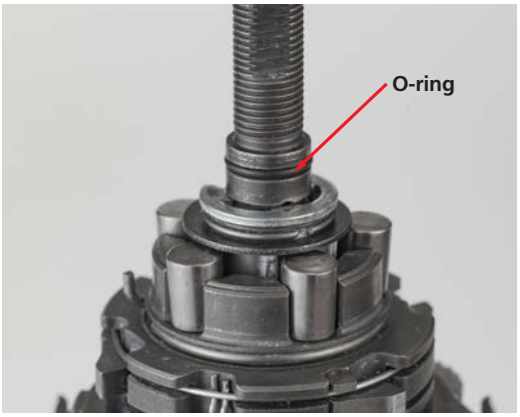

Disassembling the Internal Assembly

3. Carefully remove the E-ring with a slotted screwdriver.

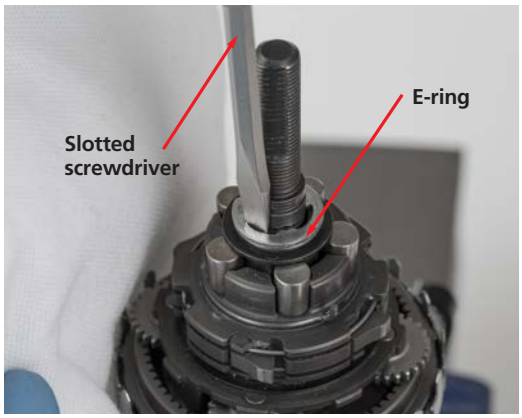

NOTICE

- The E-ring detaches with some force, so be careful not to lose it.
- Do not reuse an E-ring that has been removed.

Perform steps 5 through 7 with the cassette joint turned until it makes contact.

4. Lift the entire carrier unit straight up and remove it.

The carrier unit is structured from several parts.



NOTICE

- The carrier unit is structured from the following parts.

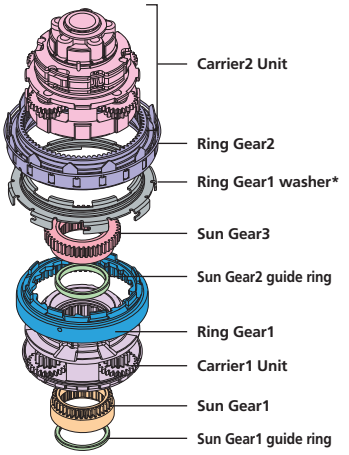

* The Ring Gear1 washer is included only when the first two letters stamped on the hub axle are "RE - RL, SA - SL, or TA - TL". When reassembling the product, ensure that the part configuration at the time of disassembly is maintained.

5. Remove Sun Gear1.



Disassembling the Internal Assembly

6. **Remove the Sun Gear1 guide ring.**



7. **Remove the ball retainer.**



8. **Reverse axle unit in vise to access the drive side cone assembly.**



9. Remove the cassette joint.

Follow the reverse procedure from "Installing the cassette joint."



10. Remove the right-hand lock nut.



11. Remove the stop washer.



Disassembling the Internal Assembly

12. **Remove the lock washer.**



13. **Remove the drive plate.**

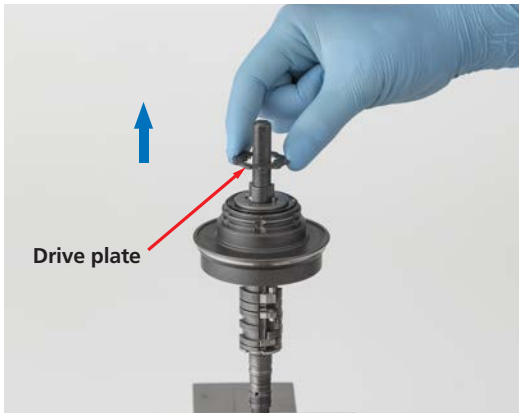

14. Remove the hub axle.

(1) Place the driver on the vise.



NOTICE

- Make sure to place it so that the vise is outside the washers inside. Otherwise, the washers could detach and you will be unable to reattach them.

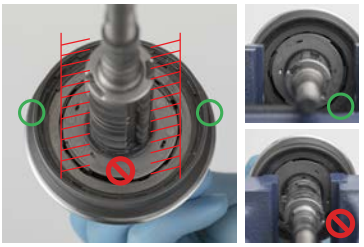

(2) Insert TL-C7001 aligned with the position of the groove on the hub axle.

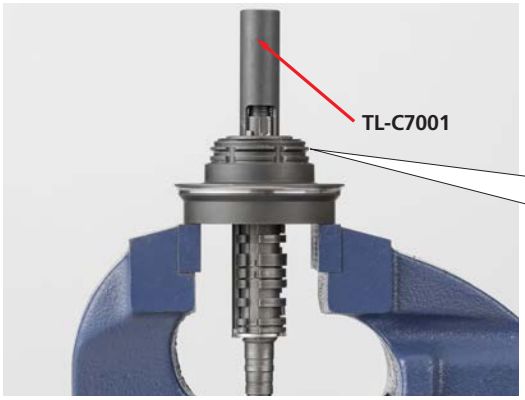



(3) Use a hammer to strike TL-C7001.
- Use your hand to support the hub axle while you strike it.



(4) The hub axle detaches.

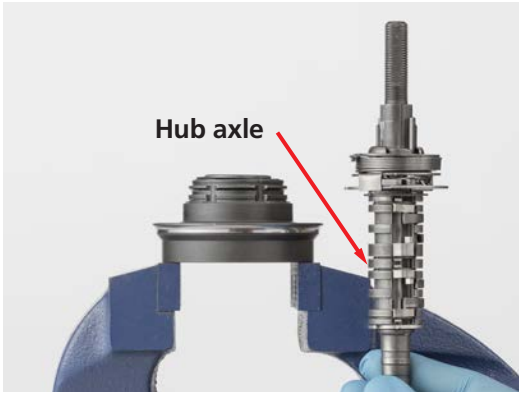

Disassembling the Internal Assembly

15. **Remove the right-hand cone from the driver unit.**

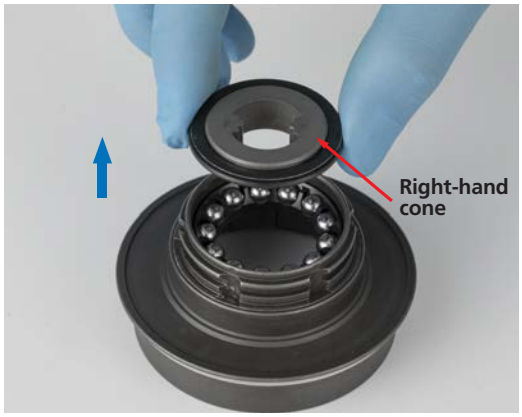

16. **Remove ball retainer A from the driver unit.**



NOTICE

- The unit is disassembled as shown below.



Assembling the Internal Assembly

Apply internal geared hub grease to the parts indicated with the following icon.

NOTICE

- Although there is white-colored and black-colored grease, the two types can be mixed during use.

GREASE (Y04130100)

1. Install the driver unit.



2. Install the ball retainer A.

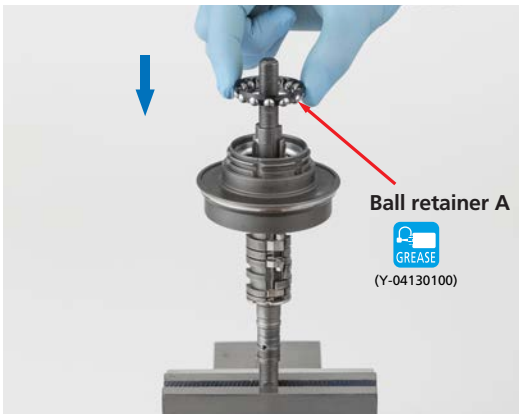

3. When installing the right-hand cone, align the two serrations with the grooves in the axle, as shown.

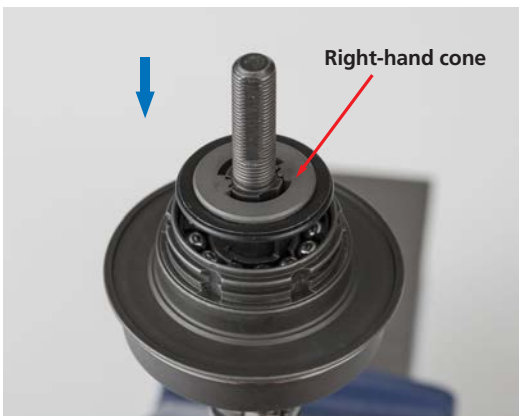

Assembling the Internal Assembly

4. Set the cone installation tool (TL-S702) and strike it until it comes to a stop.



NOTICE

- Make sure the right-hand cone is completely seated, as shown and the seal is installed equally.

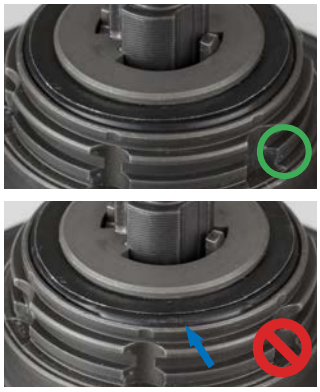

5. Install the drive plate. Be careful of the setting direction as shown in the picture.

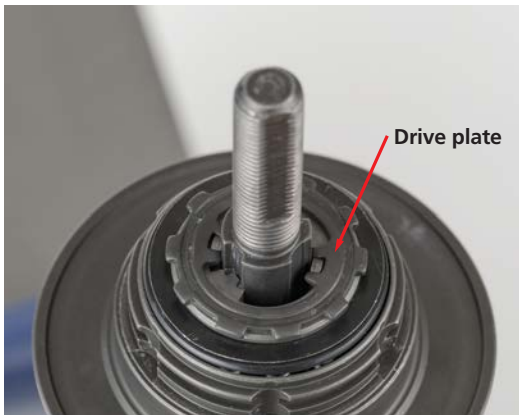

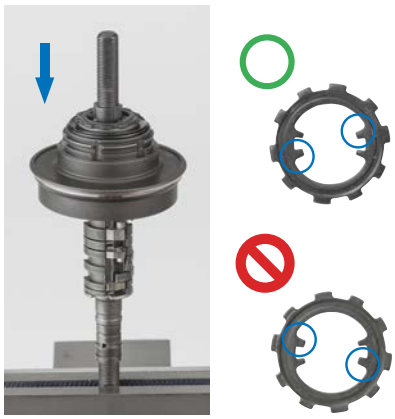

6. Install the lock washer.

Install so that the protrusions on the rear of the lock washer align with the indentations on the cone.





7. **When installing the stop washer, align the two teeth with the two grooves of the lock washer.**





8. **Tighten the right-hand lock nut.**



NOTICE

- If either the lock washer or drive plate rotates during this step, return to assembly step 3 and make sure that the cone is correctly seated.

9. **Install the cassette joint.**

Refer to "Installing the cassette joint."



10. Reverse the axle unit in the vise to complete assembly.



11. Install the ball retainer.



NOTICE

- Be careful, as the balls can easily fall from the retainer.
- Keep the vertical direction of the ball retainer in mind as you set it.

12. Install the Sun Gear1 guide ring.

Do this while turning the cassette joint until it makes contact.
If a shifting lever is connected, do this with the unit in 1st gear.



13. Install Sun Gear1.

Do this while turning the cassette joint until it makes contact.
If a shifting lever is connected, do this with the unit in 1st gear.

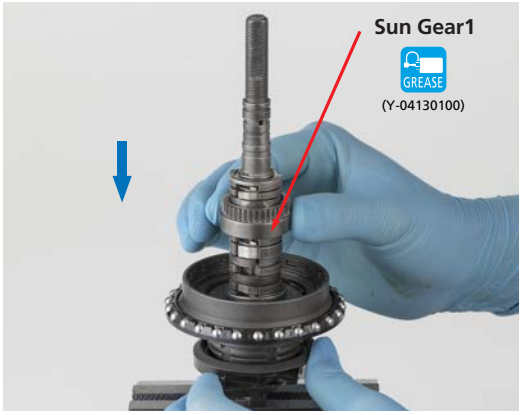

14. Install the carrier unit.

NOTICE

- The carrier unit is structured from the following parts.

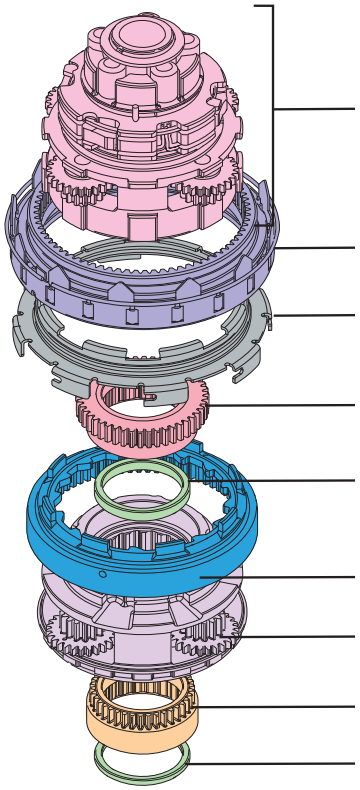

* The Ring Gear1 washer is included only when the first two letters stamped on the hub axle are "RE - RL, SA - SL, or TA - TL". When reassembling the product, ensure that the part configuration at the time of disassembly is maintained.

- Apply grease to the areas indicated in the figure.

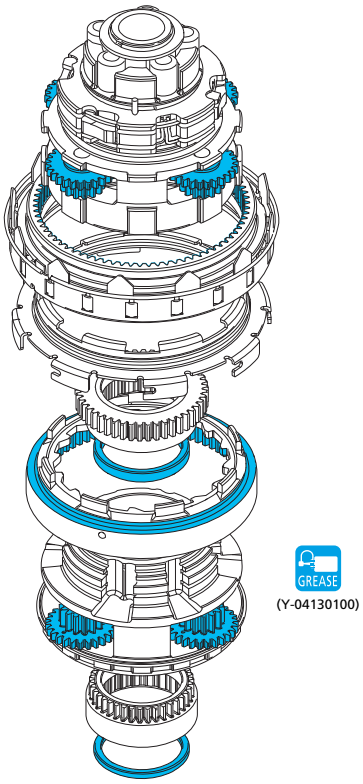

14. Install the carrier unit.

(1) Install the Carrier1unit

*Do this while pushing the cassette joint until it makes contact.
If a shifting lever is connected, do this with the unit in 1st gear.



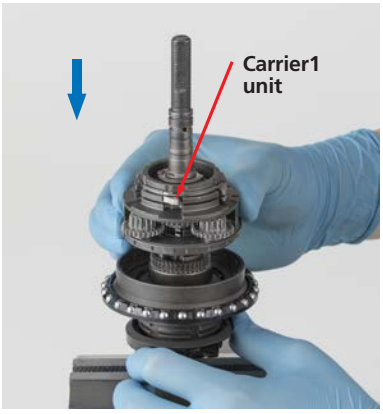

When installing, ensure that the tab on the Carrier 1 unit is inserted into the groove on the axle unit.

NOTICE

- If the metal fitting of the axle unit groove has come out as shown in the figures, use a slotted screwdriver to push it in before installing the Carrier 1 unit.



(2) Install up to Ring Gear1.

*Do this while pushing the cassette joint until it makes contact.
If a shifting lever is connected, do this with the unit in 1st gear.



(3) Combine the Carrier2 Unit, Ring Gear2, and Ring Gear1 washer.

*The Ring Gear1 washer is included only when the first two letters stamped on the hub axle are “RE - RL, SA - SL, or TA - TL”. When reassembling the product, ensure that the part configuration at the time of disassembly is maintained.



(4) Install the combined unit.

*Keep your hands away from the cassette joint while doing this.
If a shifting lever is connected, do this with the unit in 5th gear.
*If installation is difficult, install while slighting turning the driver.



15. Install a new E-ring.

Install so that the protrusion in the center of the E-ring fits into the hole in the hub axle.



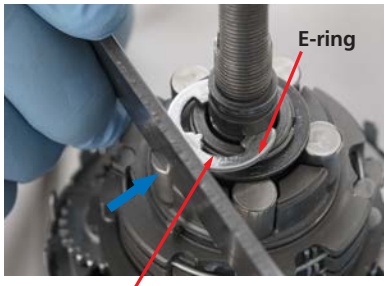

GREASE
(Y-04130100)

Contact point of E-ring and Carrier Unit

NOTICE

- If you cannot see the hole in the hub axle, the carrier unit might not be installed properly. Return to step 12 and reinstall it.

16. Install the O-ring.



NOTICE

- It is recommended that you wrap the threads with tape before installing the O-ring to prevent damage to the O-ring contacting the axle threads.

17. Install the brake shoe unit.

Install so that the end of the slide spring on the hub fits into the gap in the brake shoe.





NOTICE

- Keep the vertical direction of the brake shoe unit in mind as you install it.



Upper side



Lower side

18. Install the hub shell.

Be careful that the slide spring inside the hub shell does not touch the convex section of the internal assembly.



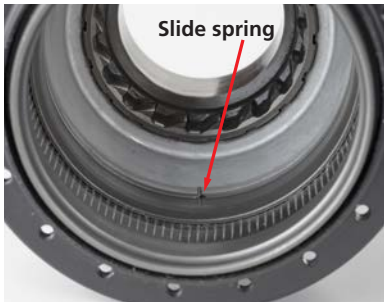

Assembling the Internal Assembly

19. **Place ball retainer onto the hub shell.**



NOTICE

- Be careful of the setting direction.



20. **Place the brake arm unit onto the hub axle and turn it to the left and right so that the serrations of the brake shoe and brake arm unit engage with each other.**





21. **Screw the stop nut to adjust so that the hub shell can be turned smoothly without any play. After adjusting, secure the stop nut with the locknut.**





Locknut



Stop Nut

22. Turn the unit over, secure it back in the vise, and then remove the cassette joint.

Follow the reverse procedure from "Installing the cassette joint."



23. Install the dust cap.

Install so that there is a 1 to 1.5 mm gap with the dust cap.



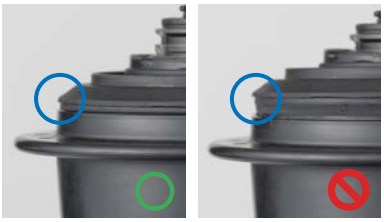

24. Assembly is now complete.



Disassembly & Assembly (SG-C7010-5D/SG-C7060-5D)

Required Tools & Parts

A: Hammer
B: TL-C7001
C: TL-SGN01
D: TL-SGC01
E: TL-S702
F: Slotted Screwdriver
G: 8 mm spanner
H: Hub spanner 28mm
I: Hub spanner 17 mm
J: Cassette joint CJ-C7000



NOTICE

- For internal assembly replacement, C, D, H, and I are necessary.
- For disassembling/assembling the internal assembly, all tools ("A" through "J") are necessary.
- When assembling or disassembling the internal unit, use a new E-ring. The E-ring is not reusable once removed.
- When disassembling/assembling the internal assembly, work will be easier if a shifting lever compatible with the cassette joint is connected.

Replacing the Internal Assembly

Refer to the part breakdown (p. 161) for the names of parts.

1. **Hold the hexagonal surfaces of the hub axle on the brake rotor side in a vise and remove the dust cap.**



NOTICE

- Forcibly pulling it may cause damage to the dust cap because of its material properties.
- Do not damage the threads of the hub axle.

2. **Install TL-SGC01 on the driver side of the hub.**



3. **Turn the hub over, pinch the flat portion of TL-SGC01 with a vise to secure it.**



4. Install TL-SGN01 into the hub axle.

Insert both large and small sections of TL-SGN01 until they are fully seated.



5. Remove the lock nut and left-hand cone.

(1) Turn TL-SGN01 with 17 mm and 28 mm hub spanners to loosen it.

(2) After loosening as much as possible, remove TL-SGN01.

(3) Remove the lock nut and left-hand cone.







Locknut 17mm (Y3LB9802T)



Left-Hand Cone 28mm (Y3LB98040)

6. **Remove the hub shell.**



7. **The internal assembly can be replaced.**



Disassembling the Internal Assembly

Installing the cassette joint

With the hexagonal part of hub axle facing downward, pinch the flat portion of the axle with a vise, and secure the internal assembly in place.

1. Set the cassette joint.

(1) Turn the cassette joint pulley in the direction of the arrow to align the red●marks on the pulley and the bracket.

(2) Install it with the red●marks on the cassette joint aligned with the red●marks on the right side of the hub body.



2. When installing the cassette joint mounting ring, align the yellow ● mark with the yellow ● mark on the pulley of the cassette joint.



3. Turn the cassette joint mounting ring 45° clockwise.

Hold down the bracket securely when performing work.



Disassembling the Internal Assembly

When disassembling or assembling the internal assembly, turn the cassette joint until it makes contact and ensure that the unit is in 1st gear (the tabs on the hub axle are folded down) before working. It will be easier to keep the unit in 1st gear if you connect a compatible shifting lever.



1. Install TL-SGC01, then pinch the flat portion with a vise to secure it.

2. Carefully remove the E-ring with a slotted screwdriver.

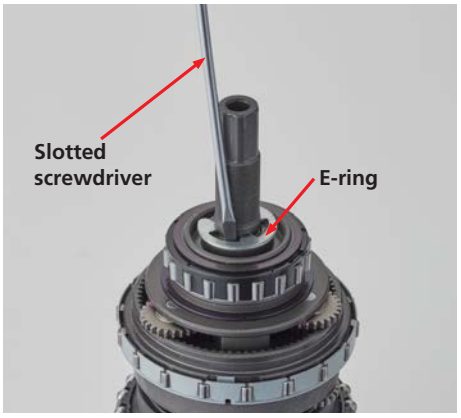

NOTICE

- The E-ring detaches with some force, so be careful not to lose it.
- Do not reuse an E-ring that has been removed.

Perform steps 3 through 7 with the cassette joint turned until it makes contact.

Disassembling the Internal Assembly

3. Lift the entire carrier unit straight up and remove it.

The carrier unit is structured from several parts.



NOTICE

- The carrier unit is structured from the following parts.

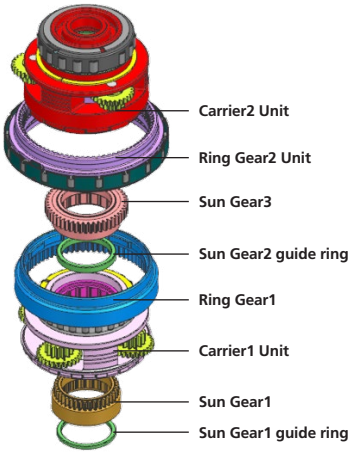

4. Remove Sun Gear1.



Disassembling the Internal Assembly

5. **Remove the Sun Gear1 guide ring.**



6. **Remove the ball retainer.**



7. **Reverse axle unit in vise to access the drive side cone assembly.**



8. Remove the cassette joint.

Follow the reverse procedure from "Installing the cassette joint."



9. Remove TL-SGC01 with an 8 mm spanner.

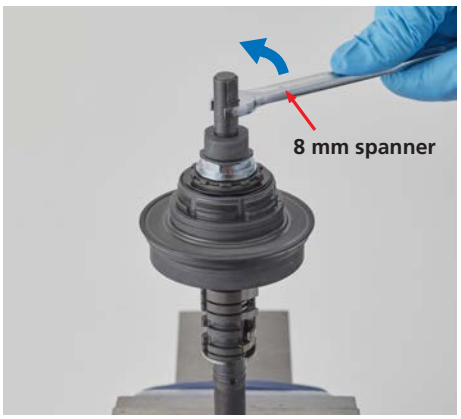



10. Remove the right-hand lock nut.

Turn the right-hand lock nut which has a left-hand thread clockwise to remove it.

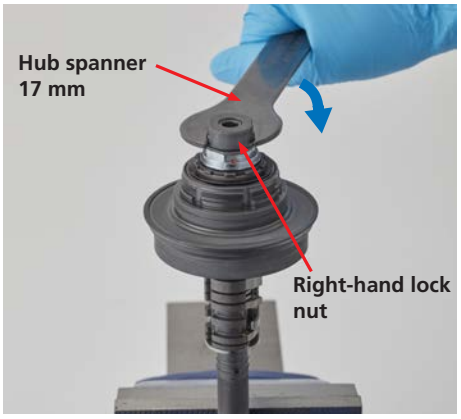

Disassembling the Internal Assembly

11. **Remove the stop washer.**



12. **Remove the lock washer.**



13. **Remove the drive plate.**

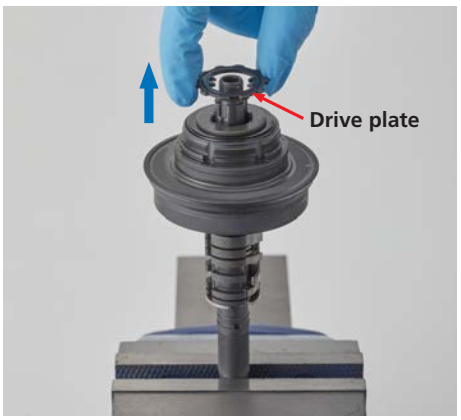

Disassembling the Internal Assembly

14. Remove the hub axle.

(1) Place the driver on the vise.



NOTICE

- Make sure to place it so that the vise is outside the washers inside. Otherwise, the washers could detach and you will be unable to reattach them.

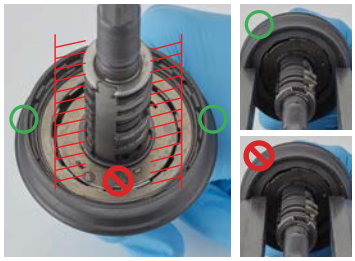

(2) Insert TL-C7001 aligned with the position of the groove on the hub axle.

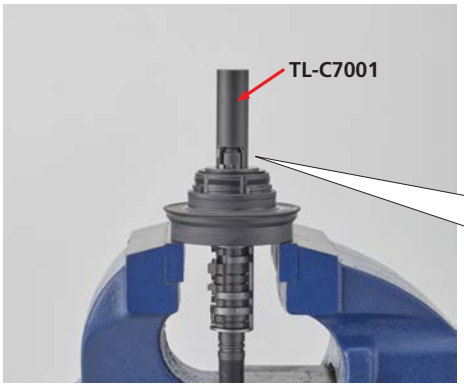



(3) Use a hammer to strike TL-C7001.
- Use your hand to support the hub axle while you strike it.



(4) The hub axle detaches.



Disassembling the Internal Assembly

15. **Remove the right-hand cone from the driver unit.**

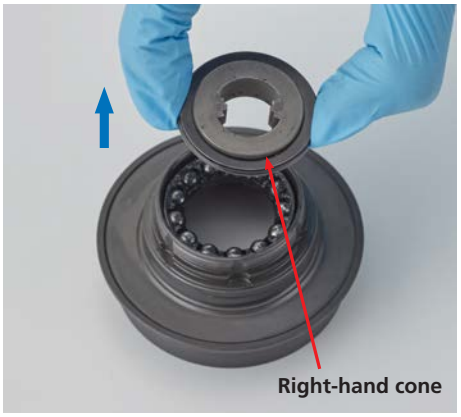

16. **Remove ball retainer A from the driver unit.**

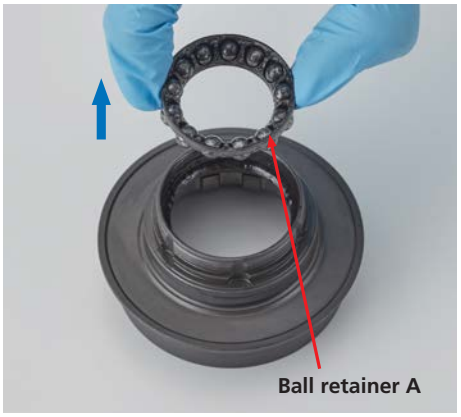

NOTICE

- The unit is disassembled as shown below.



Assembling the Internal Assembly

Apply internal geared hub grease to the parts indicated with the following icon.

NOTICE

- Although there is white-colored and black-colored grease, the two types can be mixed during use.

GREASE (Y04130100)

1. Secure the hub axle in a vise.



2. Install the driver unit.

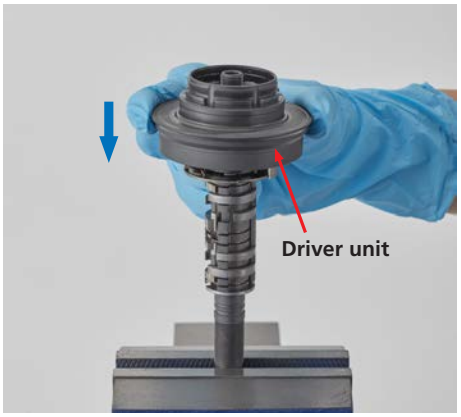

3. **Install the ball retainer A.**



4. **Install the right-hand cone.**

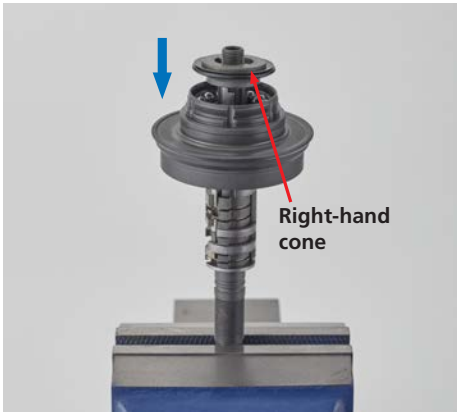

5. **Install TL-SGC01.**

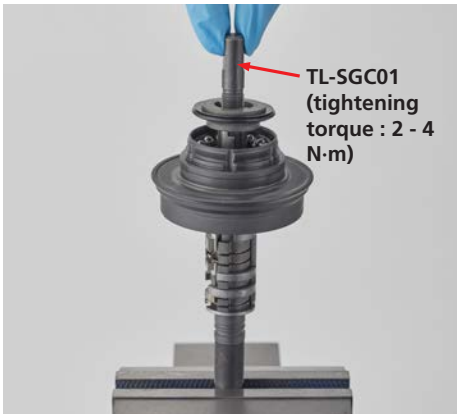

6. Set the cone installation tool (TLS702) and strike it until it comes to a stop.



NOTICE

- Make sure the right-hand cone is completely seated, as shown and the seal is installed equally.

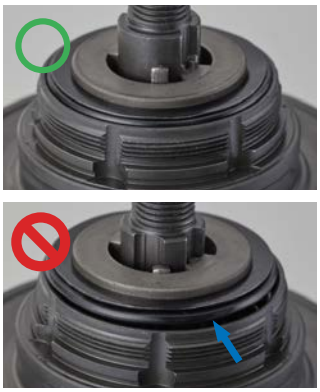

7. Install the drive plate. Be careful of the setting direction as shown in the picture.

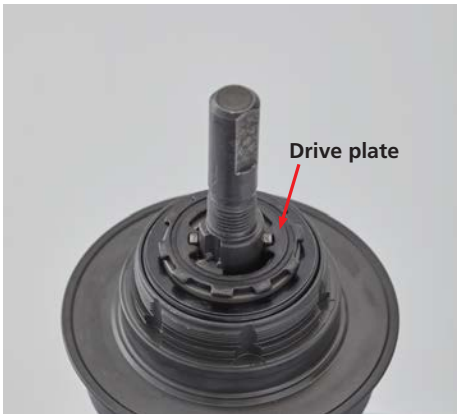

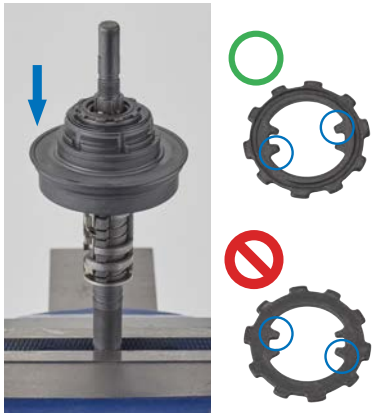

8. Install the lock washer.

Install so that the protrusions on the rear of the lock washer align with the indentations on the cone.



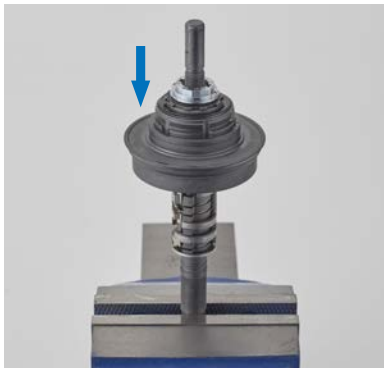

9. When installing the stop washer, align the two teeth with the two grooves of the lock washer.



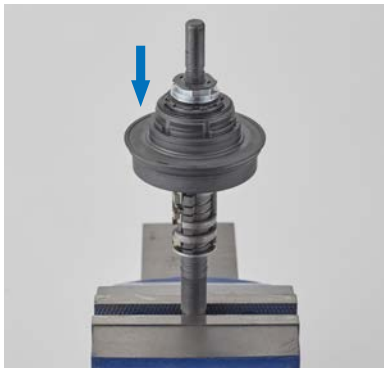

10. Remove TL-SGC01.

Refer to step 9 in "Disassembling the Internal Assembly" to remove it.



11. Tighten the right-hand lock nut.

Turn the right-hand lock nut which has a left-hand thread counterclockwise to tighten it.

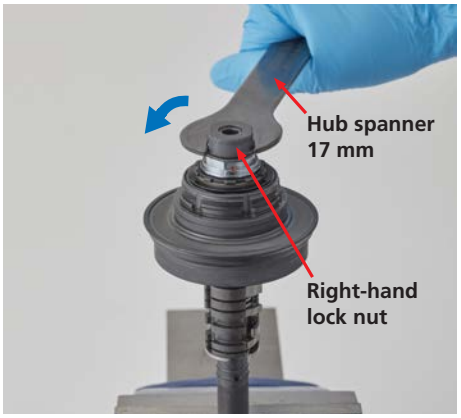

NOTICE

- If either the lock washer or drive plate rotates during this step, return to assembly step 4 and make sure that the cone is correctly seated.

12. Install TL-SGC01.

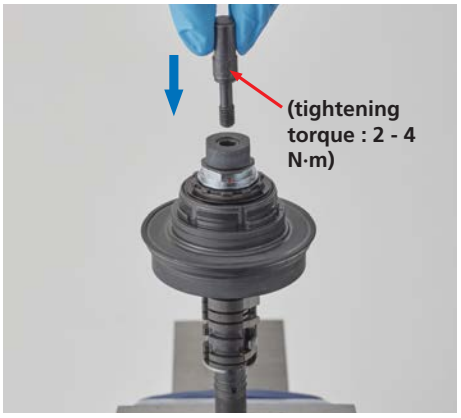

13. Install the cassette joint.

Refer to "Installing the cassette joint."



14. Reverse the axle unit in the vise to complete assembly.



15. Install the ball retainer.



NOTICE

- Be careful, as the balls can easily fall from the retainer.
- Keep the vertical direction of the ball retainer in mind as you set it.

16. Install the Sun Gear1 guide ring.

Do this while turning the cassette joint until it makes contact. If a shifting lever is connected, do this with the unit in 1st gear.



17. Install Sun Gear1.

Do this while turning the cassette joint until it makes contact. If a shifting lever is connected, do this with the unit in 1st gear.



18. Install the carrier unit.

NOTICE

- The carrier unit is structured from the following parts.

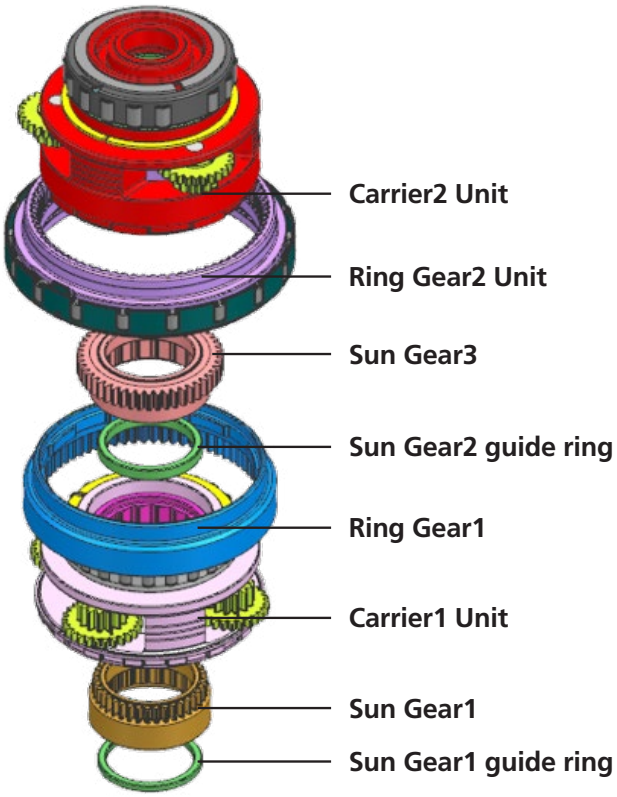

- Apply grease to the areas indicated in the figure.

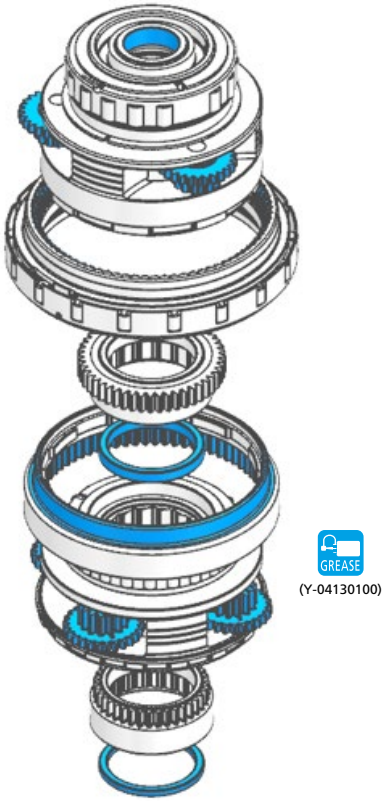

(1) Install the Carrier1 unit

*Do this while pushing the cassette joint until it makes contact. If a shifting lever is connected, do this with the unit in 1st gear.



Assembling the Internal Assembly

NOTICE

- If the metal fitting of the axle unit groove has come out as shown in the figures, use a slotted screwdriver to push it in before installing the Carrier 1 unit.

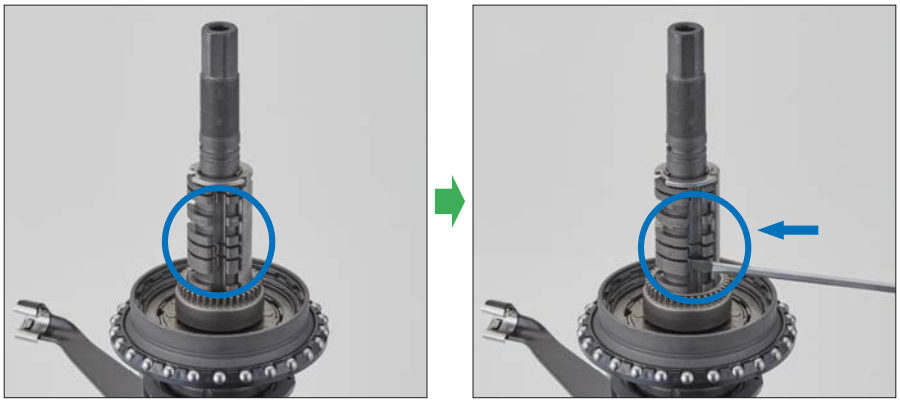

(2) Combine the Carrier2 unit and Ring Gear2 Unit.



(3) Install the combined unit.

*Keep your hands away from the cassette joint while doing this. If a shifting lever is connected, do this with the unit in 5th gear.
*If installation is difficult, install while slighting turning the driver.



Assembling the Internal Assembly

19. Install a new E-ring.

Install so that the protrusion in the center of the E-ring fits into the hole in the hub axle.





Contact point of E-ring and Carrier unit

GREASE (Y-04130100)

NOTICE

- If you cannot see the hole in the hub axle, the carrier unit might not be installed properly. Return to step 15 and reinstall it.

20. Install the hub shell.



21. Install the left-hand cone.



22. **Secure the left-hand cone with TL-SGN01.**



23. **Install the lock nut.**



24. **Secure the lock nut with TL-SGN01.**



25. **Turn TL-SGN01 with 17 mm and 28 mm hub spanners to tighten it.**

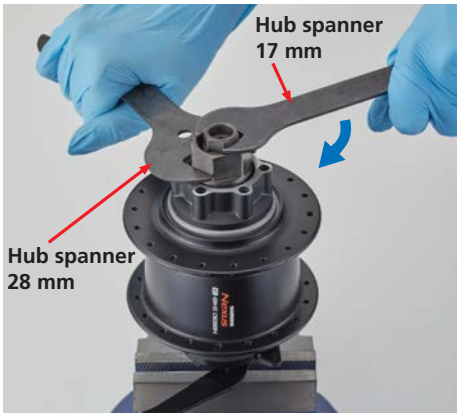

26. **Turn the unit over, secure it back in the vise, and then remove the cassette joint.**

Follow the reverse procedure from "Installing the cassette joint."



27. **Install the dust cap.**

Install so that there is a 1 to 1.5 mm gap with the dust cap.





28. **Assembly is now complete.**



Service Parts & Tools

Service Parts and Tools

Cassette Joint



CJ-C7000-5



CJ-C7000-5BD
for Belt Drive Spec.

The Belt Drive specification is designed to not interfere with the belt drive.

CJ-C7000-5 **CJ-C7000-5BD**

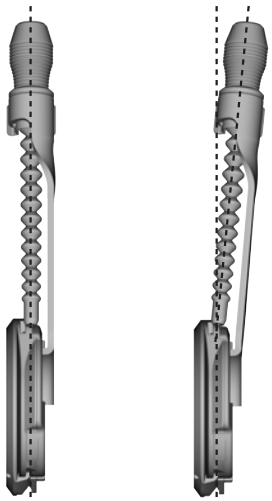

Measurement Tool



TL-S700-B

Motor unit



MU-UR520



MU-UR510



MU-UR500

Lock ring tool



TL-SGL01

NEXUS non-turn washers

The shape of the dropout determines which NTW to choose. In the illustration below, you can see the result for various frame dropouts in combination with the chosen NTW.

	5R/L	6R/L	7R/L	8R/L	9R/L
For right hand side	 5R: Yellow	 6R: Silver	 7R: Black	 8R: Dark blue	 9R:Light green
For left hand side	 5L: Brown	 6L: White	 7L: Gray	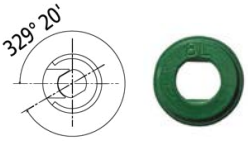 8L: Dark green	 9L:Light brown

*see Technical Information for the latest information

		5R/L	6R/L	7R/L	8R	8L	9R/L
Reversed type rear dropout	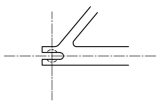	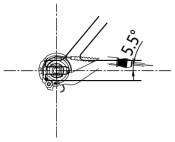	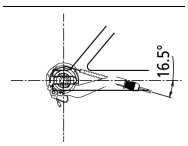	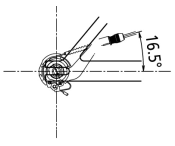	–	–	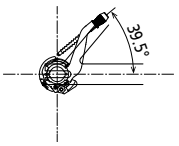
Standard type rear dropout	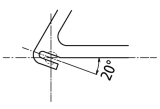	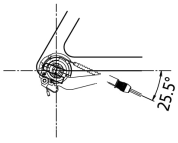	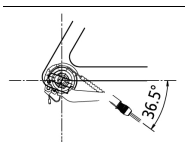	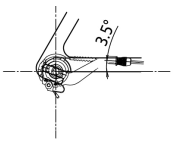	–	–	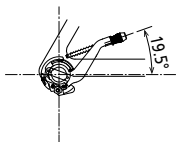
	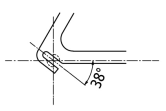	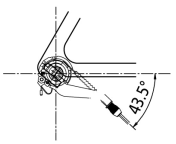	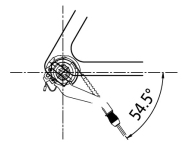	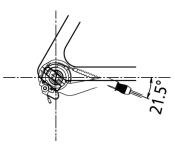	–	–	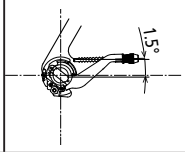
Vertical type rear dropout	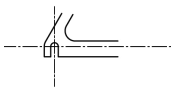	–	–	–	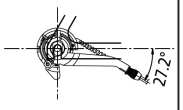	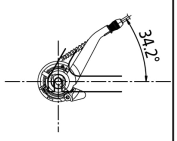	–
	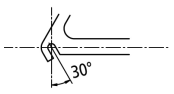	–	–	–	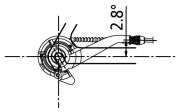	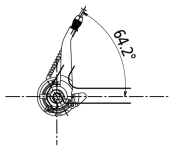	–

Hub dimensions
(Over Locknut Dimensions and Axle)

Hub dimensions (Over Locknut Dimensions and Axle)

SG-C7010-5D / SG-C7060-5D

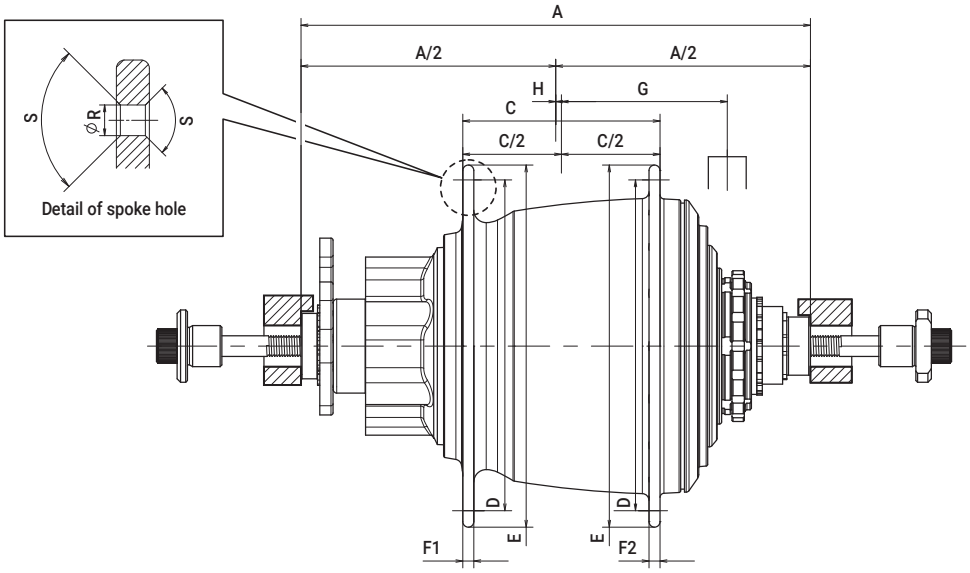

	Series		NEXUS
	Function name		INTER-5E
	Model No.		SG-C7010-5D SG-C7060-5D
	Speed		5
	Gear ratio: Total		263%
	Spoke size		#13 / #14
A	Over locknut dim. / O.L.D. (mm)		148
C	Flange distance (mm)		57.3
D	Spoke hole P.C.D. (mm)		92.6
E	Flange diameter (mm)		105.2
F	Flange width (mm): F1 (left)		3.2
	Flange width (mm): F2 (right)		3.2
G	Belt line (mm)		50
	Chain line (mm)	Inward assembly	46
		Outward assembly	51.3
H	Offset (mm)		0.7
R	Spoke hole diameter (mm)		2.9
S	Spoke hole chamfer		90°

SG-C7000-5V / SG-C7000-5R / SG-C7000-5C / SG-C7000-5D

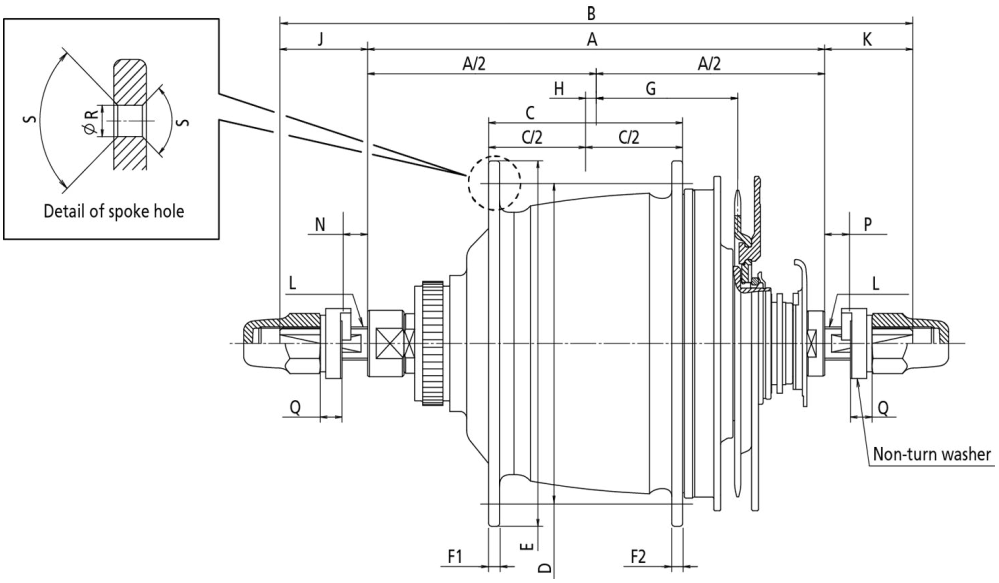

	Series	NEXUS	
	Function name	INTER-5E	
	Model No.	SG-C7000-5D	SG-C7000-5R SG-C7000-5V SG-C7000-5C
	Speed	5	
	Gear ratio: Total	263%	
	Spoke size	#13 / #14	
A	Over locknut dim. / O.L.D. (mm)	135	
B	Axle length (mm)	187	
C	Flange distance (mm)	57.3	58.3
D	Spoke hole P.C.D. (mm)	92.6	
E	Flange diameter (mm)	105.2	
F	Flange width (mm): F1 (left)	3.2	
	Flange width (mm): F2 (right)	3.2	
G	Chain line (mm): G1 (outward assembly)	47.2	
	Chain line (mm): G2 (inward assembly)	42.2	
H	Offset (mm)	3.2	3.2 / 3.7 (-5C spec.)
J	Axle length from hub (left)	26	
K	Axle length from hub (right)	26	
L	Axle size	BC3 / 8 TPI 26	
N	Rear dropout mounting width (left, includes stay etc.)	5-9	
P	Rear dropout mounting width (right, includes stay etc.)	5-9	
Q	Non-turn washer width	6.4	
R	Spoke hole diameter (mm)	2.9	
S	Spoke hole chamfer	90°	

Hub dimensions

SG-C7050-5V / SG-C7050-5R / SG-C7050-5C / SG-C7050-5D

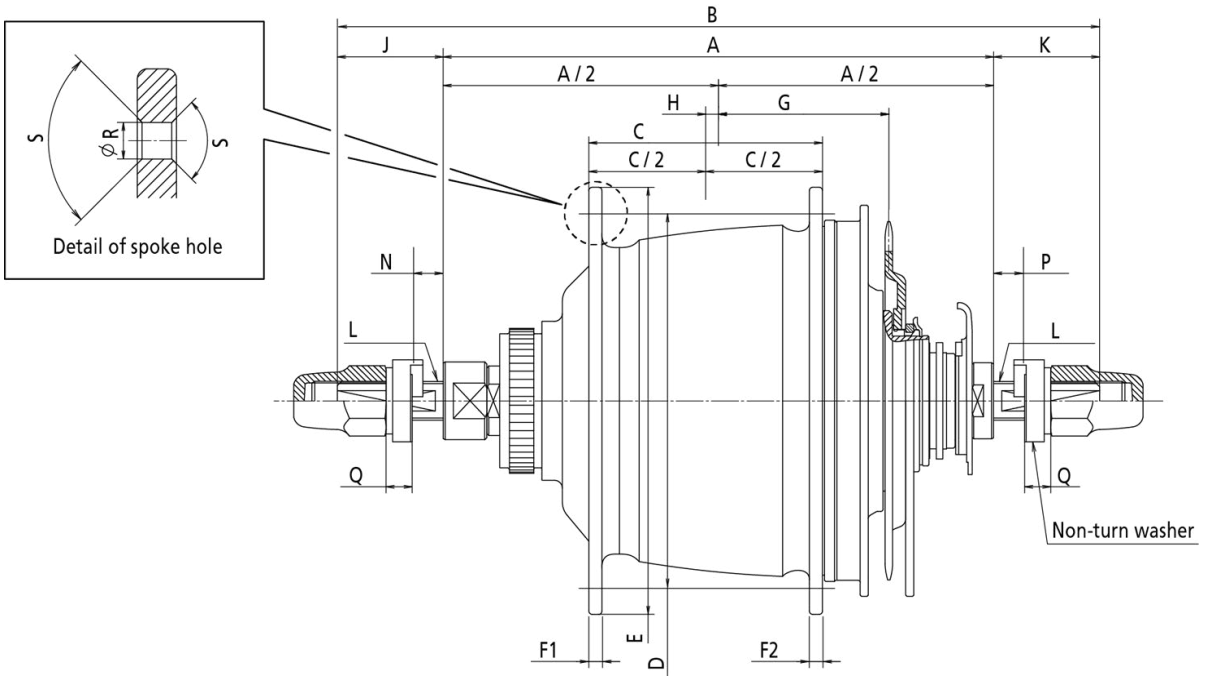

	Series	NEXUS	
	Function name	INTER-5E	
	Model No.	SG-C7050-5D	SG-C7050-5R SG-C7050-5C SG-C7050-5V
	Speed	5	
	Gear ratio: Total	263%	
A	Over locknut dim. / O.L.D. (mm)	135	
B	Axle length (mm)	187	
C	Flange distance (mm)	57.3	58.3
D	Spoke hole P.C.D. (mm)	92.6	
E	Flange diameter (mm)	105.2	
F	Flange width (mm): F1 (left)	3.2	
	Flange width (mm): F2 (right)		
G	Chain line (mm): (inward assembly)	42.2	
H	Offset (mm)	3.2	3.7
J	Axle length from hub (left)	26	
K	Axle length from hub (right)		
L	Axle size	BC3 / 8 TPI 26	
N	Rear dropout mounting width (left, includes stay etc.)	5-9	
P	Rear dropout mounting width (right, includes stay etc.)		
Q	Non-turn washer width	6.4	
R	Spoke hole diameter (mm)	2.9	
S	Spoke hole chamfer	90°	

EV / Spare Parts List

Spare parts list

NEXUS 5-speed E-Bike Dedicated Mechanical Internal Hub

SG-C7010-5D

CJ-C7000-5

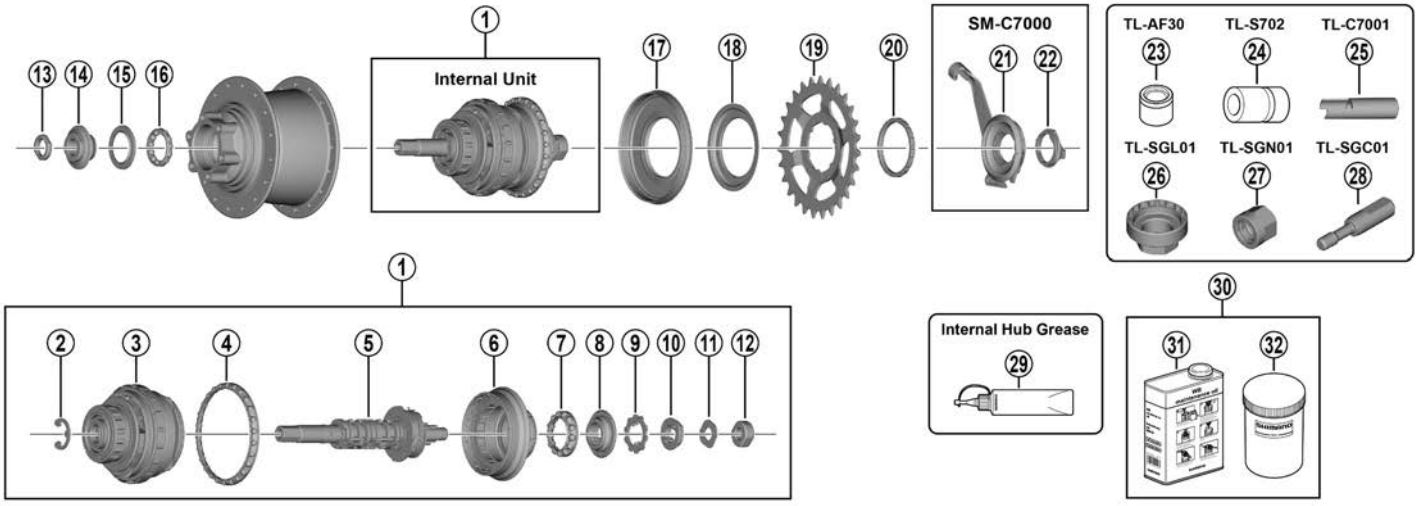

ITEM NO.	SHIMANO CODE NO.	DESCRIPTION
1	Y3LB98010	Internal unit
2	Y3FF49000	Snap ring (diameter 12 mm / 1.3 mm)
3	Y3FF98020	Carrier unit
4	Y38X98050	Ball retainer O (3/16" x 26)
5	Y3LB98020	Hub axle unit
6	Y3LB98030	Driver unit
7	Y3FF98050	Ball retainer A (7/32" x 13)
8	Y3FJ98030	Right-hand cone with seal
9	Y31L04000	Drive plate
10	Y31L98030	Lock washer
11	Y34R09000	Joint nut stop washer
12	Y3LB9801T	Right-hand lock nut
13	Y3LB9802T	Left-hand lock nut
14	Y3LB98040	Left-hand cone with dust cap
15	Y3LB9804T	Left-hand seal ring
16	Y34R98070	Ball retainer P (3/16" x 13)
17	Y37G98080	Right-hand dust cap A with seal
18	Y3FF47000	Right-hand dust cap C

ITEM NO.	SHIMANO CODE NO.	DESCRIPTION
19	Y0FM24000	Sprocket 24T (CS-C7000)
	Y0FM01000	Sprocket 27T (CS-C7000)
	Y0FM30000	Sprocket 30T (CS-C7000)
20	Y3LB9803T	Lock ring
21	Y7ZP98020	CJ-C7000-5 Cassette joint
	Y7ZP98040	CJ-C7000-5 Cassette joint for belt drive system
22	Y33Z98020	Cassette joint fixing ring
23	Y70811000	TL-AF30 Left-hand inner dust cap installation tool
24	Y13098022	TL-S702 Right-hand cone installation tool
25	Y70821000	TL-C7001 Right-hand cone removal tool
26	ITLSGL01	TL-SGL01 Lock ring tool
27	ITLSGN01	TL-SGN01 Left-hand cone adjusting tool
28	ITLSGC01	TL-SGC01 Right-hand cone tool
29	Y04130100	Internal hub grease (100 g)
	Y04130200	Internal hub grease (2.5 kg)
30	Y00298010	Internal hub maintenance oil set
31	Y00201000	Internal hub maintenance oil (1 L)
32	Y00201100	Bottle

NEXUS 5-speed E-Bike Dedicated DI2 Internal Hub

SG-C7060-5D
MU-UR510 MU-UR520

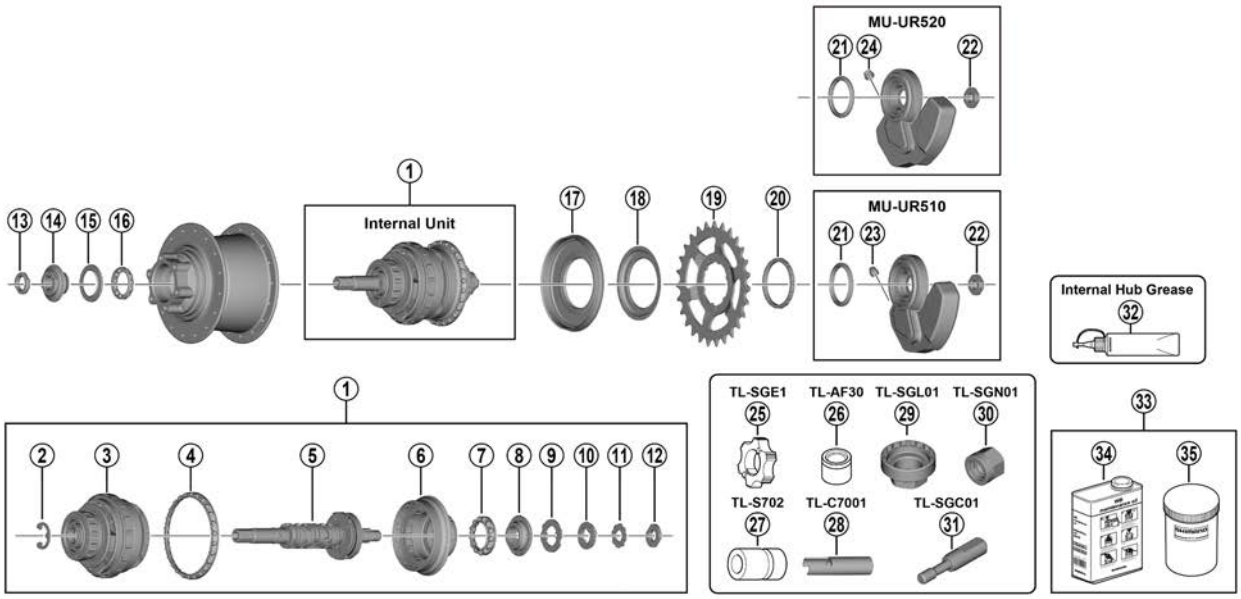

ITEM NO.	SHIMANO CODE NO.	DESCRIPTION
1	Y3LC98010	Internal unit
2	Y3FF49000	Snap ring (diameter 12 mm / 1.3 mm)
3	Y3FF98020	Carrier unit
4	Y38X98050	Ball retainer O (3/16" x 26)
5	Y3LC98020	Hub axle unit
6	Y3LB98030	Driver unit
7	Y3FF98050	Ball retainer A (7/32" x 13)
8	Y3FF98060	Right-hand cone with seal
9	Y37S07000	Drive plate
10	Y37S98050	Lock washer
11	Y38F17000	Right-hand lock nut washer
12	Y3LC9801T	Right-hand lock nut
13	Y3LB9802T	Left-hand lock nut
14	Y3LB98040	Left-hand cone with dust cap
15	Y3LB9804T	Left-hand seal ring
16	Y34R98070	Ball retainer P (3/16" x 13)
17	Y37G98080	Right-hand dust cap A with seal
18	Y3FF47000	Right-hand dust cap C

ITEM NO.	SHIMANO CODE NO.	DESCRIPTION
19	Y0FM24000	Sprocket 24T (CS-C7000)
	Y0FM01000	Sprocket 27T (CS-C7000)
	Y0FM30000	Sprocket 30T (CS-C7000)
20	Y3LB9803T	Lock ring
21	Y78U00022	Motor unit seal
22	Y7JF9801T	Lock nut
23	Y3GK89000	Plug cover
24	Y3KR9801T	Plug cover
25	Y20W10000	TL-SGE1 1st gear set tool
26	Y70811000	TL-AF30 Left-hand inner dust cap installation tool
27	Y13098022	TL-S702 Right-hand cone installation tool
28	Y70821000	TL-C7001 Right-hand cone removal tool
29	ITLSGL01	TL-SGL01 Lock ring tool
30	ITLSGN01	TL-SGN01 Left-hand cone adjusting tool
31	ITLSGC01	TL-SGC01 Right-hand cone tool
32	Y04130100	Internal hub grease (100 g)
	Y04130200	Internal hub grease (2.5 kg)
33	Y00298010	Internal hub maintenance oil set
34	Y00201000	Internal hub maintenance oil (1 L)
35	Y00201100	Bottle

Small Parts for INTER-5E Thru Axle

SM-SG001-MA Mount Adapter
SM-SG001-TA Torque Arm
SM-SG001-DS Dropout Sleeve

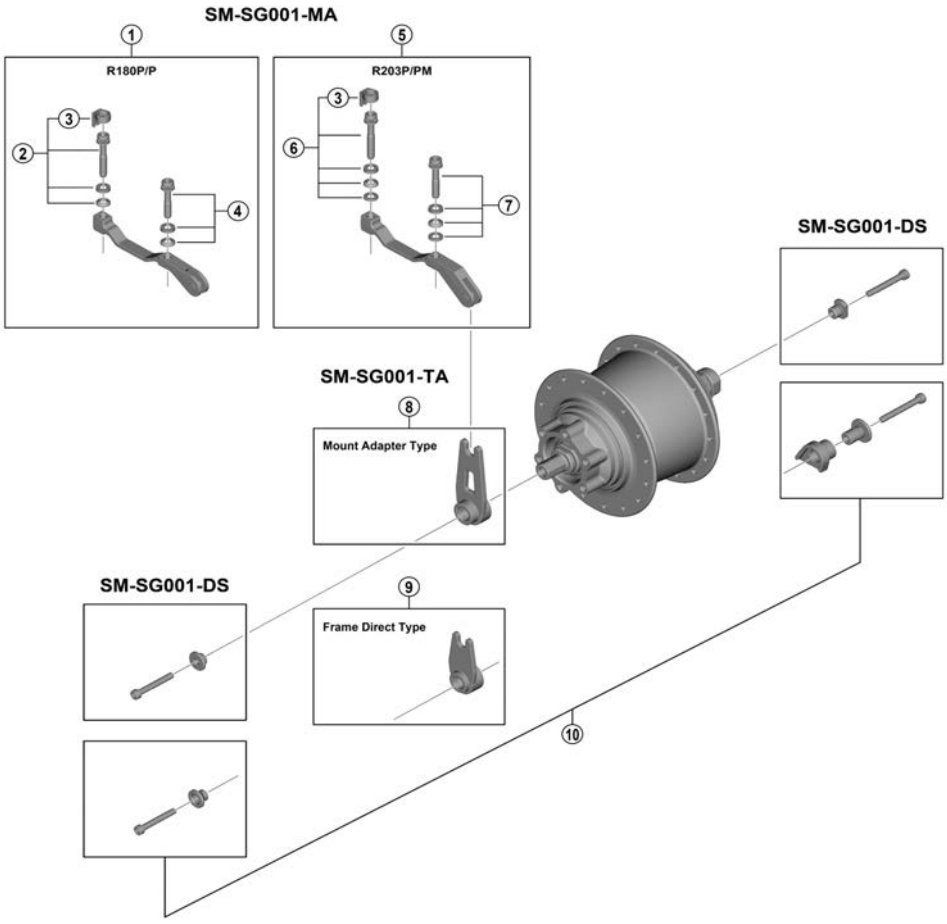

ITEM NO.	SHIMANO CODE NO.	DESCRIPTION
1	ISMSG001MA1	SM-SG001-MA Mount adapter (R180P/P)
2	Y2RT98020	Caliper mounting screw unit (M6 x 37.9)
3	Y2RT07000	Snap ring
4	Y8G498030	Caliper mounting screw unit (M6 x 32.1)
5	ISMSG001MA3	SM-SG001-MA Mount adapter (R203P/PM)
6	Y3LK98010	Caliper mounting screw unit (M6 x 34.4)
7	Y3LK98020	Caliper mounting screw unit (M6 x 34.4)
8	ISMSG001TA4	SM-SG001-TA Torque arm (mount adapter / 0 degree)
	ISMSG001TA5	SM-SG001-TA Torque arm (mount adapter / 20 degree)
	ISMSG001TA6	SM-SG001-TA Torque arm (mount adapter / 40 degree)
9	ISMSG001TA1	SM-SG001-TA Torque arm (frame direct / 0 degree)
	ISMSG001TA2	SM-SG001-TA Torque arm (frame direct / 20 degree)
	ISMSG001TA3	SM-SG001-TA Torque arm (frame direct / 40 degree)
10	ISMSG001DS1	SM-SG001-DS Dropout sleeve and hub mounting screw (left-hand flat / right-hand P1.0 / L45 mm x 2 pcs.)
	ISMSG001DS2	SM-SG001-DS Dropout sleeve and hub mounting screw (left-hand flat / right-hand P1.5 / L45 mm x 2 pcs.)
	ISMSG001DS3	SM-SG001-DS Dropout sleeve and hub mounting screw (left-hand flat / right-hand P1.75 / L45 mm x 2 pcs.)
	ISMSG001DS4	SM-SG001-DS Dropout sleeve and hub mounting screw (left-hand conical / right-hand P1.0 / L45 mm x 2 pcs.)
	ISMSG001DS5	SM-SG001-DS Dropout sleeve and hub mounting screw (left-hand flat / right-hand UDH / L45 mm, L49 mm)
	ISMSG001DS6	SM-SG001-DS Dropout sleeve and hub mounting screw (left-hand conical / right-hand UDH / L45 mm, L49 mm)

Specifications are subject to change without notice.

NEXUS 5-speed E-Bike Dedicated Mechanical Internal Hub with Coaster Brake

SG-C7000-5C
CJ-C7000-5 SM-C7000-5 CS-C7000

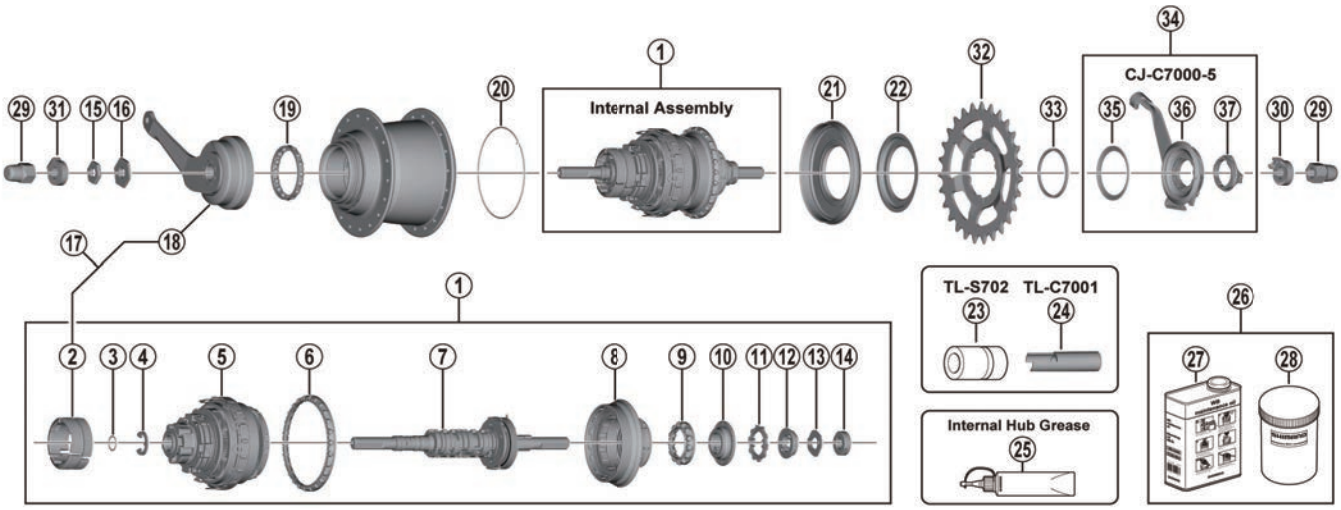

ITEM NO.	SHIMANO CODE NO.	DESCRIPTION
1	Y3FH98010	Internal assembly (axle length 187 mm)
2	Y37G98020	Brake shoe unit (3 pcs.)
3	Y37E08000	O-ring
4	Y3FE10000	Snap ring (diameter 9.6 mm)
5	Y3FE98020	Carrier unit
6	Y38X98050	Ball retainer O (3/16" x 26)
7	Y3FH98020	Hub axle unit (axle length 187 mm)
8	Y3FF98040	Driver unit
9	Y3FF98050	Ball retainer A (7/32" x 13)
10	Y3FJ98030	Right-hand cone with seal
11	Y31L04000	Drive plate
12	Y31L98030	Lock washer
13	Y34R09000	Joint nut stop washer
14	Y35Z11000	Right-hand serrated lock nut (5.4 mm)
15	Y35P28000	Left-hand lock nut (3 mm)
16	Y35P22000	Stop nut
17	Y31N98060	Brake shoe unit and brake arm unit
18	Y31N98050	Brake arm unit (3 Serration)
19	Y38R98190	Ball retainer B (3/16" x 16)
20	Y3FE17000	Hub shell slide spring
21	Y37G98080	Right-hand dust cap A with seal
22	Y3FF47000	Right-hand dust cap C
23	Y13098022	TL-S702 Right-hand cone installation tool
24	Y70821000	TL-C7001 Right-hand cone removal tool
25	Y04130100	Internal hub grease (100 g)
	Y04130200	Internal hub grease (2.5 kg)

ITEM NO.	SHIMANO CODE NO.	DESCRIPTION
26	Y00298010	Internal hub maintenance oil set
27	Y00201000	Internal hub maintenance oil (1 L)
28	Y00201100	Bottle
29	Y31414010	Cap nut (3/8")
30	Y33Z20500	Non-turn washer 5R (yellow)
	Y33M39600	Non-turn washer 6R (silver)
	Y33M39700	Non-turn washer 7R (black)
	Y34R85010	Non-turn washer 8R (dark blue)
	Y33M9801T	Non-turn washer 9R (light green)
31	Y33M39510	Non-turn washer 5L (brown)
	Y33M39610	Non-turn washer 6L (white)
	Y33M39710	Non-turn washer 7L (gray)
	Y34R85000	Non-turn washer 8L (dark green)
	Y33M9802T	Non-turn washer 9L (light brown)
32	Y0FM24000	Sprocket 24T (CS-C7000)
	Y0FM01000	Sprocket 27T (CS-C7000)
	Y0FM30000	Sprocket 30T (CS-C7000)
33	Y7ZP04000	Snap ring
34	Y7ZP98010	CJ-C7000-5 Cassette joint unit
	Y7ZP98030	CJ-C7000-5 Cassette joint unit for belt drive system
35	Y7ZP05000	Driver cap
36	Y7ZP98020	CJ-C7000-5 Cassette joint
	Y7ZP98040	CJ-C7000-5 Cassette joint for belt drive system
37	Y33Z98020	Cassette joint fixing ring

Spare parts list

NEXUS 5-speed E-Bike Dedicated Mechanical Internal Hub

SG-C7000-5D
CJ-C7000-5 SM-C7000-5 CS-C7000

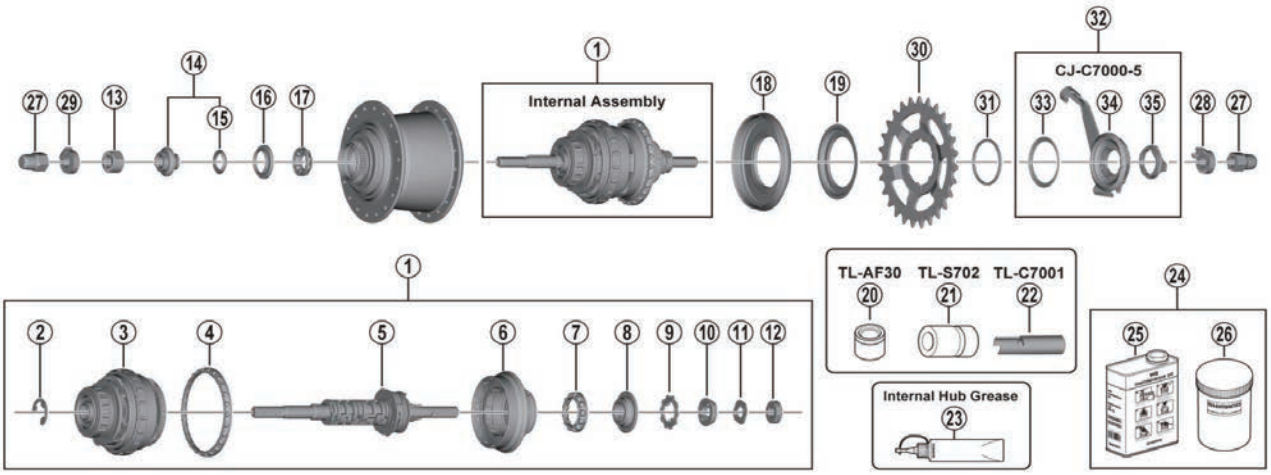

ITEM NO.	SHIMANO CODE NO.	DESCRIPTION
1	Y3FJ98010	Internal assembly (axle length 187 mm)
2	Y3FF49000	Snap ring (diameter 12 mm / 1.3 mm)
3	Y3FF98020	Carrier unit
4	Y38X98050	Ball retainer O (3/16" x 26)
5	Y3FJ98020	Hub axle unit (axle length 187 mm)
6	Y3FF98040	Driver unit
7	Y3FF98050	Ball retainer A (7/32" x 13)
8	Y3FJ98030	Right-hand cone with seal
9	Y31L04000	Drive plate
10	Y31L98030	Lock washer
11	Y34R09000	Joint nut stop washer
12	Y35Z11000	Right-hand serrated lock nut (5.4 mm)
13	Y35Z19000	Left-hand serrated lock nut (10.7 mm)
14	Y31L98040	Left-hand cone with dust cap and seal ring
15	Y37710000	Seal ring
16	Y32T08100	Left-hand Inner dust cap
17	Y36U98030	Ball retainer (7/32" x 9)
18	Y37G98080	Right-hand dust cap A with seal
19	Y3FF47000	Right-hand dust cap C
20	Y70811000	TL-AF30 Left-hand inner dust cap installation tool
21	Y13098022	TL-S702 Right-hand cone installation tool
22	Y70821000	TL-C7001 Right-hand cone removal tool
23	Y04130100	Internal hub grease (100 g)
	Y04130200	Internal hub grease (2.5 kg)

ITEM NO.	SHIMANO CODE NO.	DESCRIPTION
24	Y00298010	Internal hub maintenance oil set
25	Y00201000	Internal hub maintenance oil (1 L)
26	Y00201100	Bottle
27	Y31414010	Cap nut (3/8")
28	Y33Z20500	Non-turn washer 5R (yellow)
	Y33M39600	Non-turn washer 6R (silver)
	Y33M39700	Non-turn washer 7R (black)
	Y34R85010	Non-turn washer 8R (dark blue)
	Y33M9801T	Non-turn washer 9R (light green)
29	Y33M39510	Non-turn washer 5L (brown)
	Y33M39610	Non-turn washer 6L (white)
	Y33M39710	Non-turn washer 7L (gray)
	Y34R85000	Non-turn washer 8L (dark green)
	Y33M9802T	Non-turn washer 9L (light brown)
30	Y0FM24000	Sprocket 24T (CS-C7000)
	Y0FM01000	Sprocket 27T (CS-C7000)
	Y0FM30000	Sprocket 30T (CS-C7000)
31	Y7ZP04000	Snap ring
32	Y7ZP98010	CJ-C7000-5 Cassette joint unit
	Y7ZP98030	CJ-C7000-5 Cassette joint unit for belt drive system
33	Y7ZP05000	Driver cap
34	Y7ZP98020	CJ-C7000-5 Cassette joint
34	Y7ZP98040	CJ-C7000-5 Cassette joint for belt drive system
35	Y33Z98020	Cassette joint fixing ring

Spare parts list

NEXUS 5-speed E-Bike Dedicated Mechanical Internal Hub

SG-C7000-5R SG-C7000-5V
CJ-C7000-5 SM-C7000-5 CS-C7000

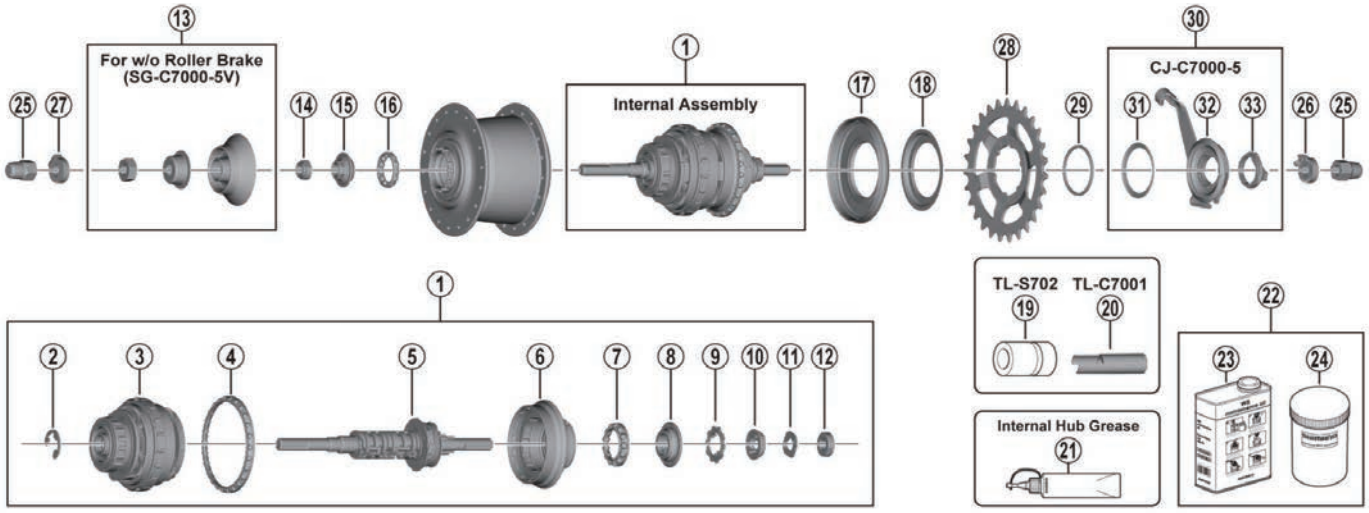

ITEM NO.	SHIMANO CODE NO.	DESCRIPTION
1	Y3FG98010	Internal assembly (axle length 187 mm)
2	Y3FF49000	Snap ring (diameter 12 mm / 1.3 mm)
3	Y3FF98020	Carrier unit
4	Y38X98050	Ball retainer O (3/16" x 26)
5	Y3FG98020	Hub axle unit (axle length 187 mm)
6	Y3FF98040	Driver unit
7	Y3FF98050	Ball retainer A (7/32" x 13)
8	Y3FJ98030	Right-hand cone with seal
9	Y31L04000	Drive plate
10	Y31L98030	Lock washer
11	Y34R09000	Joint nut stop washer
12	Y35Z11000	Right-hand serrated lock nut (5.4 mm)
13	Y34R98100	Left-hand dust cap unit
14	Y31Z06030	Lock nut for left-hand cone
15	Y38P98100	Left-hand cone with dust cap
16	Y34R98070	Ball retainer P (3/16" x 13)
17	Y37G98080	Right-hand dust cap A with seal
18	Y3FF47000	Right-hand dust cap C
19	Y13098022	TL-S702 Right-hand cone installation tool
20	Y70821000	TL-C7001 Right-hand cone removal tool
21	Y04130100	Internal hub grease (100 g)
	Y04130200	Internal hub grease (2.5 kg)
22	Y00298010	Internal hub maintenance oil set

ITEM NO.	SHIMANO CODE NO.	DESCRIPTION
23	Y00201000	Internal hub maintenance oil (1 L)
24	Y00201100	Bottle
25	Y31414010	Cap nut (3/8")
26	Y33Z20500	Non-turn washer 5R (yellow)
	Y33M39600	Non-turn washer 6R (silver)
	Y33M39700	Non-turn washer 7R (black)
	Y34R85010	Non-turn washer 8R (dark blue)
	Y33M9801T	Non-turn washer 9R (light green)
27	Y33M39510	Non-turn washer 5L (brown)
	Y33M39610	Non-turn washer 6L (white)
	Y33M39710	Non-turn washer 7L (gray)
	Y34R85000	Non-turn washer 8L (dark green)
	Y33M9802T	Non-turn washer 9L (light brown)
28	Y0FM24000	Sprocket 24T (CS-C7000)
	Y0FM01000	Sprocket 27T (CS-C7000)
	Y0FM30000	Sprocket 30T (CS-C7000)
29	Y7ZP04000	Snap ring
30	Y7ZP98010	CJ-C7000-5 Cassette joint unit
	Y7ZP98030	CJ-C7000-5 Cassette joint unit for belt drive system
31	Y7ZP05000	Driver cap
32	Y7ZP98020	CJ-C7000-5 Cassette joint
	Y7ZP98040	CJ-C7000-5 Cassette joint for belt drive system
33	Y33Z98020	Cassette joint fixing ring

Specifications are subject to change without notice.

Spare parts list

NEXUS REVOSHIFT Shifter

SL-C7000-5 5-speed

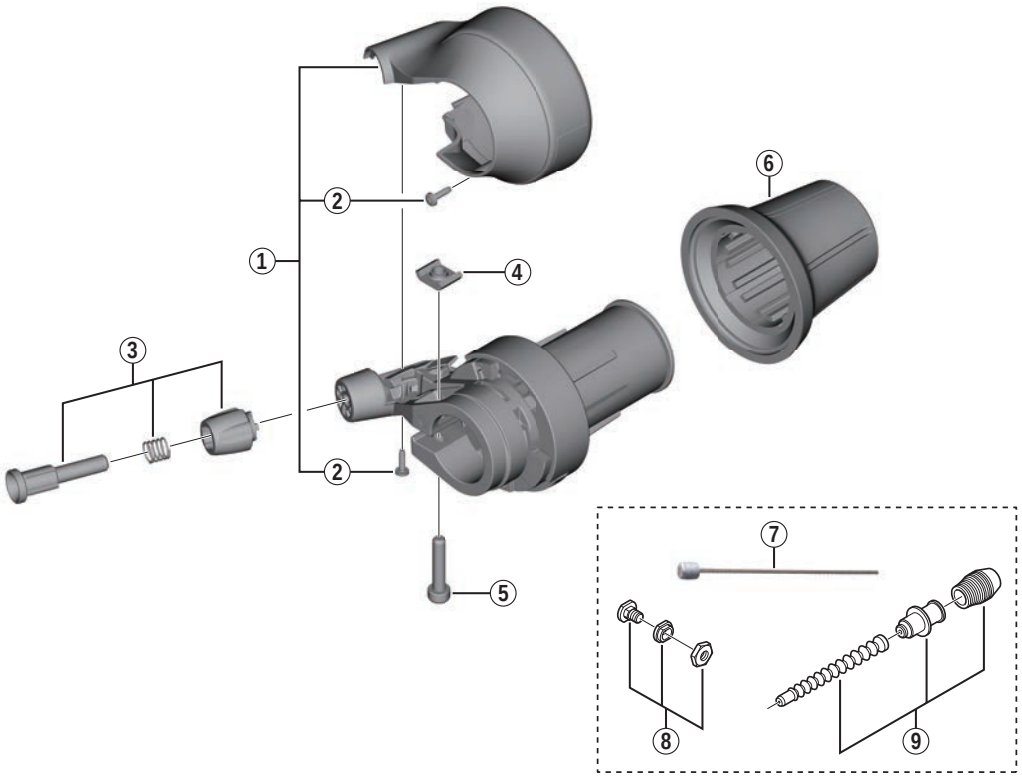

ITEM NO.	SHIMANO CODE NO.	DESCRIPTION
1	Y0FL98010	Indicator Cover (Silver) & Fixing Screws
	Y0FL98020	Indicator Cover (Black) & Fixing Screws
2	Y6F004100	Cover Fixing Screw
3	Y01A98010	Cable Adjusting Bolt Unit
4	Y6NA08000	Clamp Nut
5	Y6F409100	Clamp Screw (M4 x 18.7)
6	Y0FL00080	Grip
7	Y60098911	"Shift inner cable stainless steel • Stainless steel inner cable • Diameter 1.2 mm x 2100 mm incl. inner end cap"
8	Y6TV98070	Inner Cable Fixing Bolt Unit
9	Y74Y98160	Outer Casing Holder Unit

Spare parts list

NEXUS 5-speed E-Bike Dedicated DI2 Internal Hub w/Coaster Brake

SG-C7050-5C
MU-UR500 MU-UR510 SM-C7050-5 CS-C7000

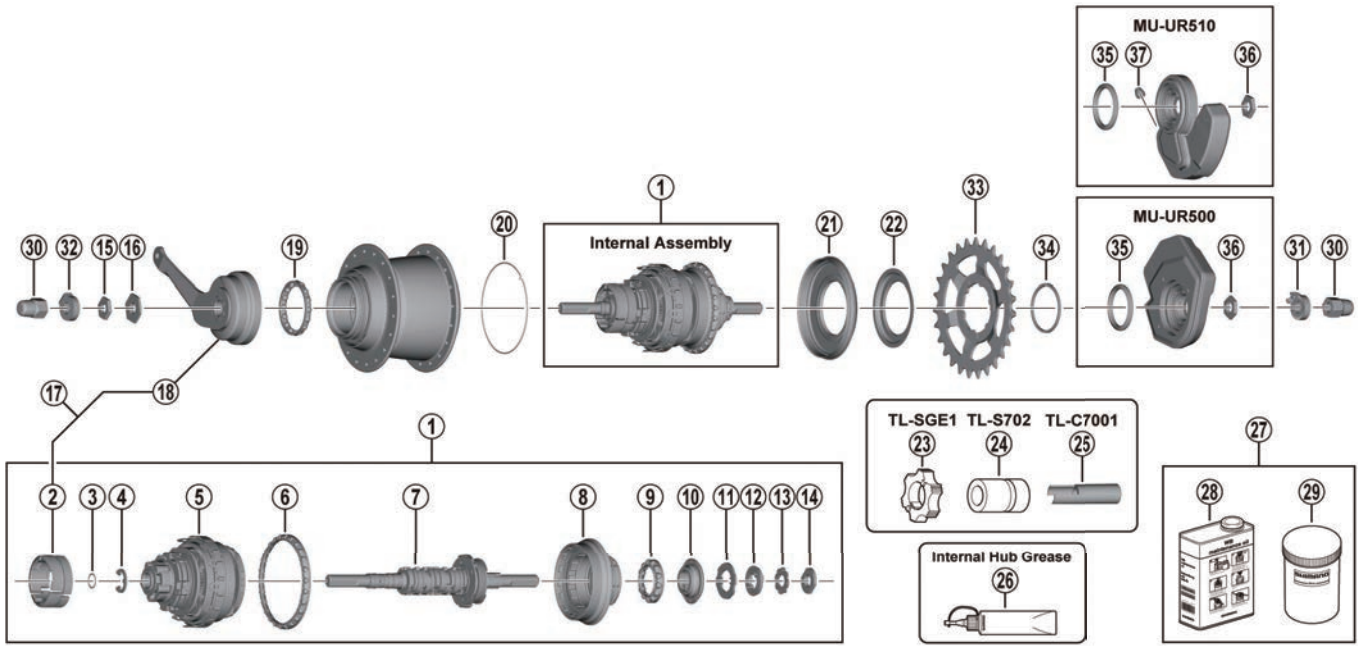

ITEM NO.	SHIMANO CODE NO.	DESCRIPTION
1	Y3FE98010	Internal assembly (axle length 187 mm)
2	Y37G98020	Brake shoe unit (3 pcs.)
3	Y37E08000	O-ring
4	Y3FE10000	Snap ring (diameter 9.6 mm)
5	Y3FE98020	Carrier unit
6	Y38X98050	Ball retainer O (3/16" x 26)
7	Y3FE98030	Hub axle unit (axle length 187 mm)
8	Y3FF98040	Driver unit
9	Y3FF98050	Ball retainer A (7/32" x 13)
10	Y3FF98060	Right-hand cone with seal
11	Y37S07000	Drive plate
12	Y37S98050	Lock washer
13	Y38F17000	Right-hand lock nut washer
14	Y38F16000	Right-hand lock nut (3.7 mm)
15	Y35P28000	Left-hand lock nut (3 mm)
16	Y35P22000	Stop nut
17	Y31N98060	Brake shoe unit and brake arm unit
18	Y31N98050	Brake arm unit (3 serration)
19	Y38R98190	Ball retainer B (3/16" x 16)
20	Y3FE17000	Hub shell slide spring
21	Y37G98080	Right-hand dust cap A with seal
22	Y3FF47000	Right-hand dust cap C
23	Y20W10000	TL-SGE1 1st gear set tool
24	Y13098022	TL-S702 Right-hand cone installation tool

ITEM NO.	SHIMANO CODE NO.	DESCRIPTION
25	Y70821000	TL-C7001 Right-hand cone removal tool
26	Y04130100	Internal hub grease (100 g)
	Y04130200	Internal hub grease (2.5 kg)
27	Y00298010	Internal hub maintenance oil set
28	Y00201000	Internal hub maintenance oil (1 L)
29	Y00201100	Bottle
30	Y31414010	Cap nut (3/8")
31	Y33Z20500	Non-turn washer 5R (yellow)
	Y33M39600	Non-turn washer 6R (silver)
	Y33M39700	Non-turn washer 7R (black)
	Y34R85010	Non-turn washer 8R (dark blue)
	Y33M9801T	Non-turn washer 9R (light green)
32	Y33M39510	Non-turn washer 5L (brown)
	Y33M39610	Non-turn washer 6L (white)
	Y33M39710	Non-turn washer 7L (gray)
	Y34R85000	Non-turn washer 8L (dark green)
	Y33M9802T	Non-turn washer 9L (light brown)
33	Y0FM24000	Sprocket 24T (CS-C7000)
	Y0FM01000	Sprocket 27T (CS-C7000)
	Y0FM30000	Sprocket 30T (CS-C7000)
34	Y7ZP04000	Snap ring
35	Y78U00022	Motor unit seal
36	Y707000Y0	Lock nut
37	Y3GK89000	Boot

Specifications are subject to change without notice.

Spare parts list

NEXUS 5-speed E-Bike Dedicated DI2 Internal Hub

SG-C7050-5D
MU-UR500 MU-UR510 SM-C7050-5 CS-C7000

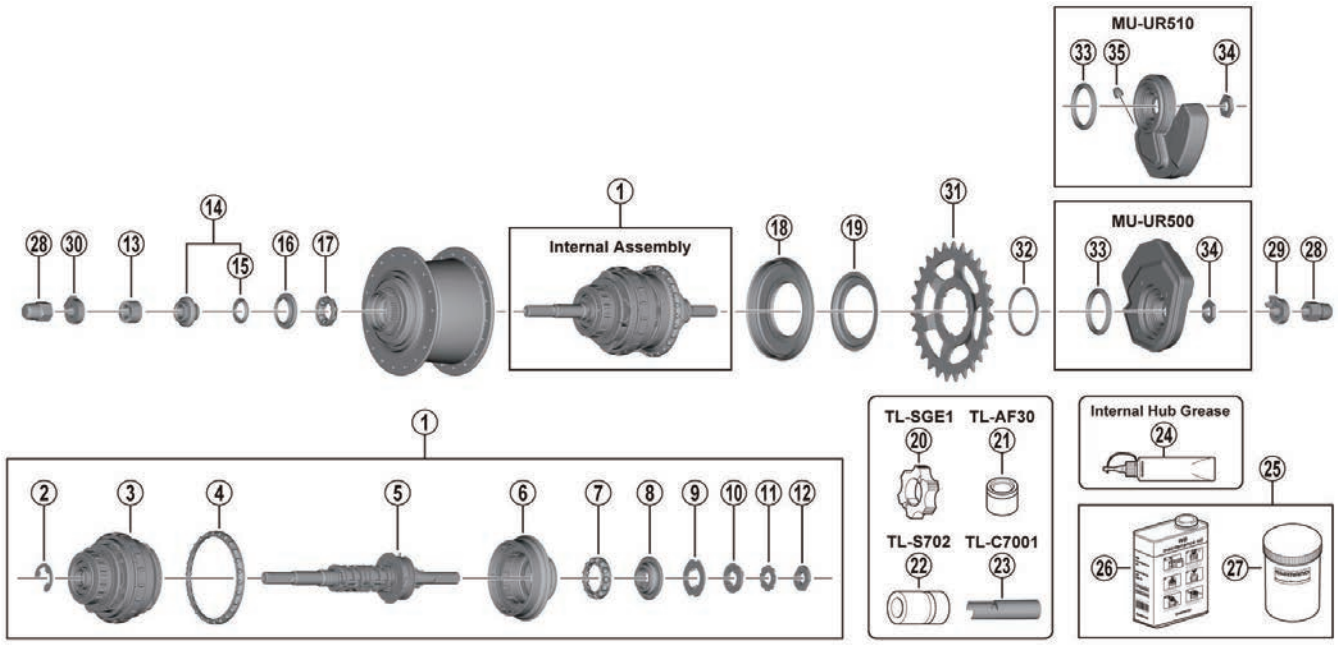

ITEM NO.	SHIMANO CODE NO.	DESCRIPTION
1	Y3FF98010	Internal assembly (axle length 187 mm)
2	Y3FF49000	Snap ring (diameter 12 mm / 1.3 mm)
3	Y3FF98020	Carrier unit
4	Y38X98050	Ball retainer O (3/16" x 26)
5	Y3FF98030	Hub axle unit (axle length 187 mm)
6	Y3FF98040	Driver unit
7	Y3FF98050	Ball retainer A (7/32" x 13)
8	Y3FF98060	Right-hand cone with seal
9	Y37S07000	Drive plate
10	Y37S98050	Lock washer
11	Y38F17000	Right-hand lock nut washer
12	Y38F16000	Right-hand lock nut (3.7 mm)
13	Y35Z19000	Left-hand serrated lock nut (10.7 mm)
14	Y31L98040	Left-hand cone with dust cap and seal ring
15	Y37710000	Seal ring
16	Y32T08100	Left-hand inner dust cap
17	Y36U98030	Ball retainer (7/32" x 9)
18	Y37G98080	Right-hand dust cap A with seal
19	Y3FF47000	Right-hand dust cap C
20	Y20W10000	TL-SGE1 1st gear set tool
21	Y70811000	TL-AF30 Left-hand inner dust cap installation tool
22	Y13098022	TL-S702 Right-hand cone installation tool
23	Y70821000	TL-C7001 Right-hand cone removal tool

ITEM NO.	SHIMANO CODE NO.	DESCRIPTION
24	Y04130100	Internal hub grease (100 g)
	Y04130200	Internal hub grease (2.5 kg)
25	Y00298010	Internal hub maintenance oil set
26	Y00201000	Internal hub maintenance oil (1 L)
27	Y00201100	Bottle
28	Y31414010	Cap nut (3/8")
29	Y33Z20500	Non-turn washer 5R (yellow)
	Y33M39600	Non-turn washer 6R (silver)
	Y33M39700	Non-turn washer 7R (black)
	Y34R85010	Non-turn washer 8R (dark blue)
	Y33M9801T	Non-turn washer 9R (light green)
30	Y33M39510	Non-turn washer 5L (brown)
	Y33M39610	Non-turn washer 6L (white)
	Y33M39710	Non-turn washer 7L (gray)
	Y34R85000	Non-turn washer 8L (dark green)
	Y33M9802T	Non-turn washer 9L (light brown)
31	Y0FM24000	Sprocket 24T (CS-C7000)
	Y0FM01000	Sprocket 27T (CS-C7000)
	Y0FM30000	Sprocket 30T (CS-C7000)
32	Y7ZP04000	Snap ring
33	Y78U00022	Motor unit seal
34	Y707000Y0	Lock nut
35	Y3GK89000	Boot

Specifications are subject to change without notice.

Spare parts list

NEXUS 5-speed E-Bike Dedicated DI2 Internal Hub

SG-C7050-5R SG-C7050-5V
MU-UR500 MU-UR510 SM-C7050-5 CS-C7000

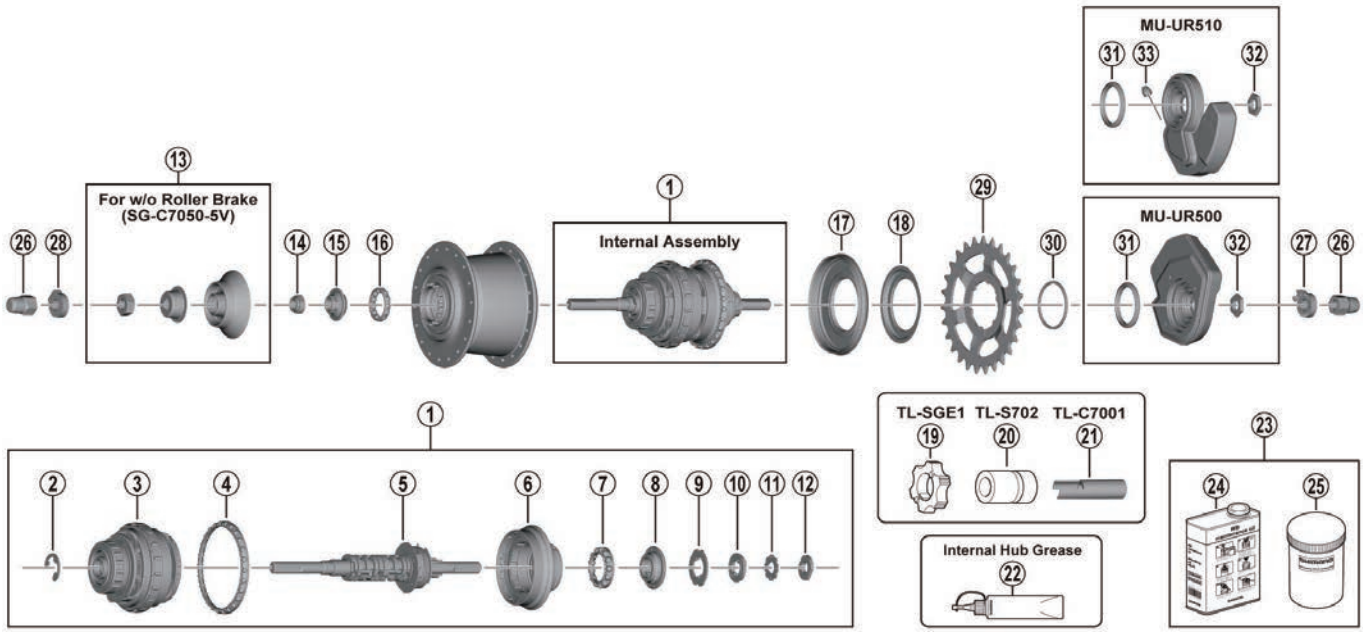

ITEM NO.	SHIMANO CODE NO.	DESCRIPTION
1	Y3FD98010	Internal assembly (axle length 187 mm)
2	Y3FF49000	Snap ring (diameter 12 mm / 1.3 mm)
3	Y3FF98020	Carrier unit
4	Y38X98050	Ball retainer O (3/16" x 26)
5	Y3FD98020	Hub axle unit (axle length 187 mm)
6	Y3FF98040	Driver unit
7	Y3FF98050	Ball retainer A (7/32" x 13)
8	Y3FF98060	Right-hand cone with seal
9	Y37S07000	Drive plate
10	Y37S98050	Lock washer
11	Y38F17000	Right-hand lock nut washer
12	Y38F16000	Right-hand lock nut (3.7 mm)
13	Y34R98100	Left-hand dust cap unit
14	Y31Z06030	Lock nut for left-hand cone
15	Y38P98100	Left-hand cone with dust cap
16	Y34R98070	Ball retainer P (3/16" x 13)
17	Y37G98080	Right-hand dust cap A with seal
18	Y3FF47000	Right-hand dust cap C
19	Y20W10000	TL-SGE1 1st gear set tool
20	Y13098022	TL-S702 Right-hand cone installation tool
21	Y70821000	TL-C7001 Right-hand cone removal tool
22	Y04130100	Internal hub grease (100 g)
	Y04130200	Internal hub grease (2.5 kg)

ITEM NO.	SHIMANO CODE NO.	DESCRIPTION
23	Y00298010	Internal hub maintenance oil set
24	Y00201000	Internal hub maintenance oil (1 L)
25	Y00201100	Bottle
26	Y31414010	Cap nut (3/8")
27	Y33Z20500	Non-turn washer 5R (yellow)
	Y33M39600	Non-turn washer 6R (silver)
	Y33M39700	Non-turn washer 7R (black)
	Y34R85010	Non-turn washer 8R (dark blue)
	Y33M9801T	Non-turn washer 9R (light green)
28	Y33M39510	Non-turn washer 5L (brown)
	Y33M39610	Non-turn washer 6L (white)
	Y33M39710	Non-turn washer 7L (gray)
	Y34R85000	Non-turn washer 8L (dark green)
	Y33M9802T	Non-turn washer 9L (light brown)
29	Y0FM24000	Sprocket 24T (CS-C7000)
	Y0FM01000	Sprocket 27T (CS-C7000)
	Y0FM30000	Sprocket 30T (CS-C7000)
30	Y7ZP04000	Snap ring
31	Y78U00022	Motor unit seal
32	Y707000Y0	Lock nut
33	Y3GK89000	Boot

Specifications are subject to change without notice.