DEORE XT Front Wheel

WH-M8120-TL-F15-B-275 For Disc Brake

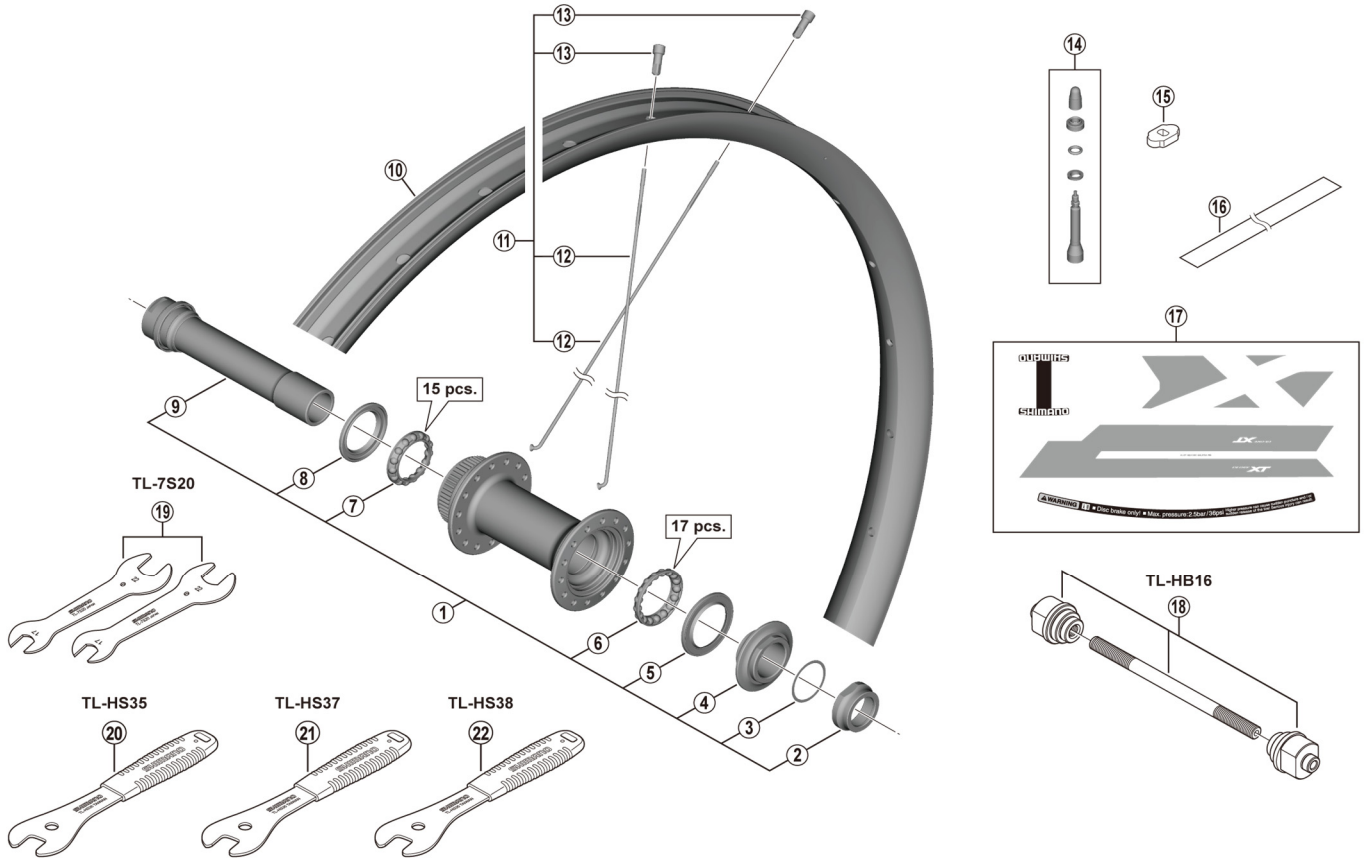

• Over Lock Nut Dimension: 110 mm

ITEM NO.	SHIMANO CODE NO.	DESCRIPTION
1	**Y2CZ98010**	Complete hub axle
2	**Y2A500050**	Right hand lock nut
3	**Y24613000**	Adjusting washer
4	**Y24698040**	Right hand cone with dust cap
5	**Y27X15000**	Right hand seal ring
6	**Y27X98030**	Right hand ball retainer (5/32" x 17)
7	**Y27X98040**	Left hand ball retainer (5/32" x 15)
8	**Y27X14000**	Left hand seal ring
9	**Y2AH98020**	Hub axle unit
* 10	**EWHRIMZ2F5Y**	Rim {28H}
* 11	**EWHSPOKEY273W**	Spoke unit {spoke (274 mm x 28 pcs.) / nipple (28 pcs.)}
12	**Y0HK05000**	Spoke (274 mm)
13	**Y012Z4079**	Nipple 12g-BC2 cross recess type 2
14	**Y0KL98010**	Valve unit
15	**Y4RJ10000**	Valve tool
16	**Y0KL00010**	Tubeless tape
17	**Y0HK98010**	Rim sticker unit
18	**Y20W98020**	TL-HB16 Hub setting tool
19	**Y13098900**	TL-7S20 Hub spanner (17 mm x 22 mm) 2 pcs.
20	**Y23098020**	TL-HS35 Hub spanner 15 mm
21	**Y23098030**	TL-HS37 Hub spanner 17 mm
22	**Y23098040**	TL-HS38 Hub spanner 18 mm

Apr.-2021-4526A

© Shimano Inc. I

Specifications are subject to change without notice.

SHIMANO

quefairedemesdechets.fr