Switch Unit

SW-EN601-L

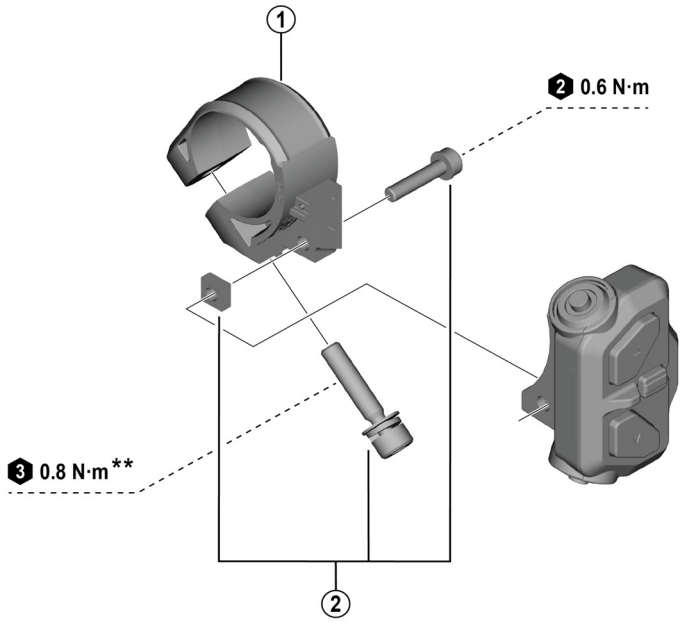

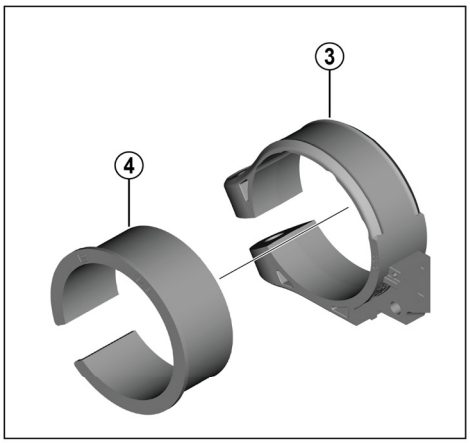

2 **2 mm hexagon wrench**

3 **3 mm hexagon wrench**

**** When installing parts onto a carbon frame/handlebar,**
confirm the recommended tightening torque with thecarbon frame or handlebar manufacturer.
This will prevent damage to the frame/handlebar due toover-torquing or inadequate securing of the components.

ITEM NO.	SHIMANO CODE NO.	DESCRIPTION	INTERCHANGE-ABILITY		
			SW-EN600		
1	**Y0NM98010**	Clamp band (diameter 22.2) with nut	A		
2	**Y0NM98020**	Fixing bolts and nut	A		
3	**Y0NM98030**	Clamp band (diameter 35.0) with nut	A		
4	**Y0NM9801T**	Adapter (diameter 31.8)	A		

A: Same parts.
B: Parts are usable, but differ in materials, appearance, finish, size, etc.
Absence of mark indicates non-interchangeability.

Oct.-2026-5209
© Shimano Inc. I

Specifications are subject to change without notice.

SHIMANO

quefairedemesdechets.fr