# Dealer's Manual

| | | |
|---|---|---|
| ROAD | GRAVEL | MTB |
| E-BIKE | LIFESTYLE | GENERAL |

# Hydraulic Disc Brake/ Dual Control Lever (Di2)

## DURA-ACE

**BR-R9270**
**ST-R9270**

## ULTEGRA

**BR-R8170**
**ST-R8170**

## SHIMANO 105

**BR-R7170**
**ST-R7170**

## SHIMANO

**SW-RS801-E**
**SW-RS801-S**
**SW-RS801-T**

## Contents


IMPORTANT NOTICE ..... 4

TO ENSURE SAFETY ..... 5

List of tools to be used ..... 11

Installation/removal ..... 12

Installing the disc brake rotor ..... 12

Installing the dual control levers ..... 13

Installing satellite shifters ..... 17

- SW-RS801-T ..... 17
- SW-RS801-E / SW-RS801-S ..... 19
- Troubleshooting ..... 24

Installing the brake hose (easy hose joint system) ..... 25

- Overview of the easy hose joint system ..... 25
- Checking the length of the hose ..... 25
- Cutting the hose ..... 26
- Connecting the hose ..... 29

Installing the brake hose ..... 32

- Connecting the hose ..... 32

Installing the brake calipers ..... 35

- Installing the brake pads ..... 35
- Installing to the frame ..... 36

Adjustment ..... 48

Adjusting the reach ..... 48

Adjusting the free stroke ..... 49

Maintenance ..... 50

Replacing the brake pads ..... 50

SHIMANO genuine mineral oil replacement ..... 53

- Draining the mineral oil ..... 53
- Adding mineral oil and bleeding air ..... 56

Caliper piston maintenance ..... 65

Replacing the bracket cover ..... 66

Replacing the coin batteries of the dual control levers ..... 67

- Before replacing the coin batteries ..... 67

- Checking the dual control lever battery level ..... 67
- Replacing the coin batteries ..... 67

# IMPORTANT NOTICE

- **This dealer's manual is intended primarily for use by professional bicycle mechanics.**

  Users who are not professionally trained for bicycle assembly should not attempt to install the components themselves using the dealer's manuals.

  If any part of the information on the manual is unclear to you, do not proceed with the installation. Instead, contact your place of purchase or a distributor for assistance.
- Make sure to read all manuals included with each product.
- Do not disassemble or modify the product other than as stated in the information contained in this dealer's manual.
- All manuals and technical documents are accessible online at https://si.shimano.com .
- For consumers who do not have easy access to the internet, please contact a SHIMANO distributor or any of the SHIMANO offices to obtain a hardcopy of the user's manual.
- Please observe the appropriate rules and regulations of the country, state or region in which you conduct your business as a dealer.

**For safety, be sure to read this dealer's manual thoroughly before use, and follow it for correct use.**

The following instructions must be observed at all times in order to prevent personal injury and physical damage to equipment and surroundings.

The instructions are classified according to the degree of danger or damage which may occur if the product is used incorrectly.

| | |
|---|---|
| DANGER | Failure to follow the instructions will result in death or serious injury. |
| WARNING | Failure to follow the instructions could result in death or serious injury. |
| CAUTION | Failure to follow the instructions could cause personal injury or physical damage to equipment and surroundings. |

# TO ENSURE SAFETY

**⚠ WARNING**

- **Be sure to follow the instructions provided in the manuals when installing the product.**

  Only use SHIMANO genuine parts. If a component or replacement part is incorrectly assembled or adjusted, it can lead to component failure and cause the rider to lose control and crash.
- Wear approved eye protection while performing maintenance tasks such as replacing components.

Be sure to also inform users of the following:

- Because each bicycle may handle slightly differently depending on the model, be sure to learn the proper braking technique (including brake lever pressure and bicycle control characteristics) and operation of your bicycle. Improper use of your bicycle's brake system may result in a loss of control, which could lead to serious injury due to a fall or collision.
- Keep your fingers away from rotating disc brake rotors. The disc brake rotor is sharp enough to inflict severe injury to your fingers if caught within the openings of moving rotor.

- Do not touch the calipers or disc brake rotor while riding or immediately after dismounting from the bicycle. The calipers and disc brake rotor will become hot when the brakes are operated, so you may get burned if you touch them.
- Do not allow any oil or grease to get onto the disc brake rotor and brake pads. Riding the bicycle with oil or grease on the disc brake rotor and brake pads may prevent the brakes from operating and result in serious injury due to a fall or collision.
- Check the thickness of the brake pads and do not use them if they have a thickness of 0.5 mm or less. Doing so may prevent the brakes from operating and result in serious injury due to a fall or collision.

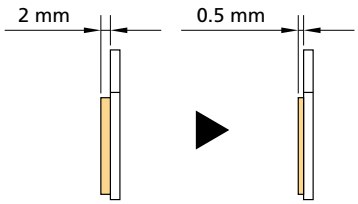


- Do not use the disc brake rotor if it is cracked or deformed. The disc brake rotor may break, and result in serious injury due to a fall or collision. Replace the disc brake rotor with a new one.
- Do not use the disc brake rotor if its thickness is 1.5 mm or less. Also do not use it if the aluminum surface becomes visible. The disc brake rotor may break, and result in serious injury due to a fall or collision. Replace the disc brake rotor with a new one.
- Do not continuously apply the brakes. Doing so may cause a sudden increase in the brake lever stroke, preventing the brakes from operating and resulting in serious injury due to a fall or collision.
- Do not use the brakes with fluid leaking. Doing so may prevent the brakes from operating and result in serious injury due to a fall or collision.
- Do not apply the front brake too strongly. If you do so, the front wheel may lock and the bicycle may fall forward, and serious injury may result.
- Because the required braking distance will be longer during wet weather, reduce your speed and apply the brakes early and gently. You may fall or collide and be seriously injured.

- A wet road surface may cause tires to lose traction; therefore, to avoid this, reduce your speed and apply the brakes early and gently. If the tires lose traction, it may result in serious injury due to a fall or collision.
- If the quick release lever is on the same side as the disc brake rotor, confirm that it does not interfere with the disc brake rotor. Otherwise, the bicycle may fall forward, and serious injury may result.

■ Dual control lever

- Do not throw or subject this product to strong shocks. If this is not observed, bursting, overheating or problems with operation may occur.
- Do not let grease adhere to the metal terminals. A conduction failure may result.
- ST-R9270 / ST-R8170: Use only the battery specified. Using an incorrect battery may cause the battery to burst or leak fluid, resulting in fire, injury, or defacement in the surrounding area.
- ST-R7170: Use only the coin batteries specified. When replacing the coin battery, replace both batteries at the same time with new ones. Using different kinds of coin batteries or new and old coin batteries together may cause the coin batteries to burst, leak fluid, overheat or catch fire, resulting in a fire, injuries or contamination in the surrounding area.
- Keep the coin batteries out of the reach of children and do not use this equipment in locations where children are likely to be present. If batteries are swallowed by mistake, seek medical attention immediately.
- Dispose of the coin batteries according to proper country and/or state disposal regulations. Disposal of this product into fire or a hot oven, or mechanically crushing or cutting it, can result in an explosion of the coin batteries.
- ST-R9270 / ST-R8170: Observe all federal, state and local environmental regulations when disposing of this product, because it has an internal battery in addition to its coin battery. Disposal of this product into fire or a hot oven, or mechanically crushing or cutting of it, can result in an explosion of the internal battery.

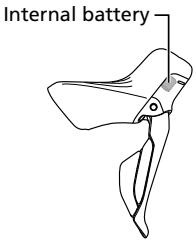


- Do not use the coin batteries outside their operating temperature ranges. If a battery is used or stored in temperatures which are outside these ranges, fire, injury or problems with operation may occur.
- Do not use the coin batteries if leakages, discoloration, deformation or any other abnormalities occur. If this is not observed, bursting, overheating or problems with operation may occur.
- If any leaked fluid from the coin batteries gets on your skin or clothes, wash it off immediately with clean water. The leaked fluid may damage your skin.
- Do not leave this product in an extremely high temperature surrounding environment such as in a closed vehicle on a hot day, or near a heater. Doing so may result in an explosion of the coin batteries or the leakage of flammable liquid or gas from them.
- Do not subject this product to extremely low air pressure. Doing so may result in an explosion of the coin batteries or the leakage of flammable liquid or gas from them. Transporting this product by air is not a problem.
- When operating the shift switch, be careful not to allow your fingers to be caught in the derailleur. The motor in the derailleur is powerful enough to be operated without stopping until the shifting position is reached, and may cause serious injury if your fingers interfere with the shifting motion.

### For installation to the bicycle and maintenance

- Do not use oil other than SHIMANO genuine mineral oil. Doing so may prevent the brakes from operating and result in serious injury due to a fall or collision.
- Use only mineral oil from a container that has been stored in a clean and sealed state. Doing otherwise may prevent the brakes from operating and result in serious injury due to a fall or collision.
- Do not let water or air bubbles get into the brake system. Doing so may prevent the brakes from operating and result in serious injury due to a fall or collision.
- Do not use with a tandem bicycle. Doing so may prevent the brakes from operating and result in serious injury due to a fall or collision.
- When installing the brake caliper using screw fixing pins, be sure to use caliper fixing screws of the appropriate length.

  Failing to install caliper fixing screws of the correct length may cause the screws to fall out or lead to insufficient force for holding the brake caliper.

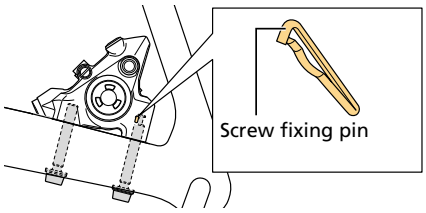


■ Brake hose

- Refer to the table below, and do not use an incorrect connector insert. Doing so may prevent the brakes from operating and result in serious injury due to a fall or collision.

| Brake hose | Connector insert | |
|---|---|---|
| | Length | Color |
| SM-BH90-JK-SSR | 11.2 mm | Silver |

- Do not reuse the olive piece or the connector insert when reinstalling. Doing so may prevent the brakes from operating and result in serious injury due to a fall or collision.

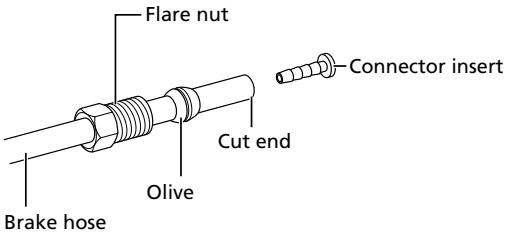


- Cut the brake hose so that the cut end is perpendicular to the length of the hose. If the brake hose is cut at an angle, fluid leaks may result. Fluid leaks may prevent the brakes from operating and result in serious injury due to a fall or collision.

■ When using TL-BH62

- Read the TL-BH62 manual carefully, and keep it in a safe place for later reference.

**⚠ CAUTION**

Be sure to also inform users of the following:

■ Cautions on SHIMANO genuine mineral oil

- Use appropriate eye protection when handling, and avoid contact with eyes. In the event of eye contact, flush with fresh water and seek medical assistance immediately. Contact with eyes may result in irritation.
- Use gloves when handling. In the event of skin contact, wash well with soapy water. Contact with skin may cause a rash and discomfort.
- Cover nose and mouth with a respirator type mask and use in a well ventilated area. Inhalation of mineral oil mist or vapors may cause nausea.
- If mineral oil mist or vapor is inhaled, go to an area with fresh air. Cover up with a blanket. Stay warm and stable and seek professional medical advice immediately.

■ Bed-in period

- Disc brakes have a bed-in period, and the braking force will gradually increase as the bed-in period progresses. You may lose control of the bicycle, which can result in serious injury due to a fall or collision.

  The same thing will happen when the brake pads or disc brake rotor are replaced.

For installation to the bicycle and maintenance

- When using the SHIMANO original tool (TL-FC36, etc.) to remove and install the disc brake rotor lock ring, wear gloves and be careful not to touch the outer edges of the disc brake rotor with your hands. Failure to do so may result in cuts to your hands.

■ Handling SHIMANO genuine mineral oil

- Do not drink. May cause vomiting or diarrhea.
- Keep out of reach of children.
- Do not cut, let near heat, weld or pressurize the SHIMANO genuine mineral oil container. Doing so may cause an explosion or fire.
- Disposal of used oil: Follow local county and/or state codes for disposal. Use caution when preparing the oil for disposal.
- Directions: Keep the container sealed to prevent foreign objects and moisture from getting inside, and store it in a cool, dark area away from direct sunlight or heat. Keep from heat or flame.
- For cleaning brake hoses exposed to mineral oil, or cleaning and maintaining tools, use isopropyl alcohol or a dry cloth. Do not use commercially available brake cleaners. Doing so may cause damage to plastic parts.

■ Brake hose

- When cutting the brake hose, handle the knife carefully so as not to cause injury.
- Be careful to avoid injury from the olive.

■ When using TL-BH62

- When cutting the hose, handle the knife carefully so as not to cause injury.
- Be careful to avoid pinching your fingers between the lever and the tool during operations.
- When replacing the knife blade, handle the knife carefully so as not to cause injury.
- Keep the tool and the blades out of reach of children.

**NOTICE**

Be sure to also inform users of the following:

- When the bicycle wheel has been removed, it is recommended that pad spacers are installed. Do not depress the brake lever while the wheel is removed. If the brake lever is depressed without the pad spacers installed, the pistons will protrude further than normal. If that happens, consult a place of purchase.

- When conducting maintenance, do not use commercially available brake cleaners or silencing agents, as they can cause damage to parts such as the seals.
- Be sure to keep rotating the crank arm during gear shifting operations.
- Handle the components carefully, and avoid subjecting them to strong shock.
- Do not use the thinners or harsh solvents to clean the products. Such solvents may damage the surface.
- If gear shifting operation does not feel smooth, consult the place of purchase for assistance.
- Be careful not to get water into the E-TUBE ports and the satellite shifter connection port.
- The components are designed to be fully waterproofed to withstand wet weather riding conditions; however, do not deliberately place them into water.
- Do not clean the bicycle with a high-pressure wash. If water gets into any of the components, operating problems or rusting may result.
- Contact the place of purchase for updates of the component software. The most up-to-date information is available on the SHIMANO website.
- Be sure to attach dummy plugs to any unused E-TUBE ports and the satellite shifter connection port. If water gets into any of the components, operating problems or rusting may result.
- The electric wire has small waterproof connectors, so do not repeatedly connect and disconnect it too often. Doing so may impair the waterproofing.
- 2.4 GHz digital wireless

  This product adopts digital communication technologies in the 2.4 GHz frequency, which are used for wireless LAN, etc.
- It may receive interference in the following locations or environments that prevent wireless communication from being performed correctly:
  * Near a device such as a television, computer, radio, motor, or microwave oven, or inside an automobile or railway car
  * Near a railway crossing or railway track, television transmitting station, or radar base, etc.
  * When using the device in combination with another cordless device or some lights
- Coin batteries
  * Insert the coin batteries with the correct +/- orientation.
  * Remove the coin batteries if you do not use them for a long period.
  * When the coin batteries are depleted, remove them immediately.
- Store this product or the bicycle with this product installed in a cool indoor location away from direct sunlight and rain (approx. 10 - 20°C).
- If the storage temperature is too low or too high, the performance of the coin batteries is reduced, and their usable time will be shorter.
- When using after a long period of non-use, be sure to replace the coin batteries with new ones.
- Products are not guaranteed against natural wear and deterioration from normal use and aging.
- For maximum performance we highly recommend SHIMANO lubricants and maintenance products.

### For installation to the bicycle and maintenance

- Use a brake hose/electric wire which still has some length to spare even when the handlebars are turned all the way to both sides. Furthermore, check that the dual control levers do not touch the bicycle frame when the handlebars are turned all the way.
- Do not remove the lever unit from the bracket body.

- If the brake caliper mounting boss and the dropout are not of standard dimensions, the disc brake rotor and caliper may touch. If this occurs, contact the manufacturer of the bicycle frame or fork for assistance.
- When the bicycle wheel has been removed, it is recommended that pad spacers are installed. The pad spacers will prevent the piston from coming out if the brake lever is depressed while the wheel is removed.
- If the brake lever is depressed without the pad spacers installed, the pistons will protrude further than normal. Use a flat-shaped tool to push back the brake pad, while being careful not to damage the surface of the brake pads. (If the brake pads are not installed, use a flat-shaped tool to push the pistons straight back in, while being careful not to damage them.) When pushing back the brake pads or pistons, do so with an oil funnel attached to the brake lever. Otherwise, the diaphragm of the brake lever may be damaged by the oil pressure.
- Do not remove the pistons when cleaning the calipers.
- Use the parts indicated in the exploded view of the dual control levers when you replace the clamp band, clamp screw, or clamp nut.
- Even with the recommended tightening torque, there is a possibility that the carbon handlebars may become damaged and insufficiently tightened. Confirm the appropriate torque value with the bicycle manufacturer or the handlebar manufacturer.

■ Dual control lever

- Dummy plugs are installed at the time of shipment from the factory. Do not remove them except when necessary.
- When routing the electric wires, take care to ensure that they do not interfere with the brake levers.

■ Satellite shifter

- When connecting electric wires, make sure that foreign matter does not get inside the plug or satellite shifter connection port. A connection with foreign matter present may result in a malfunction.
- If the plug is exposed during storage, transportation, or maintenance work, and there is a possibility of foreign matter getting inside, protect the plug with masking tape or a similar material.
- If you do not feel a click when connecting an electric wire, check that there is no foreign matter inside the plug or satellite shifter connection port. If foreign matter is present, use a blower to remove it. If the problem persists, replace the satellite shifter with a new one.

■ Notes on reinstalling and replacing components

- Pairing is required after reinstalling or replacing the dual control levers or rear derailleur. Perform pairing with a wired or wireless connection.
- If the component configuration changes or malfunction is observed, use E-TUBE PROJECT to update the firmware of each component to the latest version and perform a check again. Also, make sure that E-TUBE PROJECT is the latest version. If the software is not the latest version, the component compatibility or the product functions may not be available.

The actual product may differ from the illustration because this manual is intended mainly to explain the procedures for using the product.

# List of tools to be used

The following tools are needed for installation, adjustment, and maintenance purposes.

| Tool | |
|---|---|
| 2 | 2 mm hexagon wrench |
| 2.5 | 2.5 mm hexagon wrench |
| 3 | 3 mm hexagon wrench |
| 4 | 4 mm hexagon wrench |
| 5 | 5 mm hexagon wrench |
| 8 | 8 mm spanner |
| 0.8x4 | Slotted screwdriver 0.8 x 4 |
| TL-EW300 | TL-EW300 |
| TL-BH62 | TL-BH62 |
| TL-BR001 | TL-BR001 (syringe and tube) |
| TL-BR002 | TL-BR002 (oil funnel and oil stopper) |
| | Utility knife |
| | Cutters |
| | Micrometer |

# Installation/removal

## Installing the disc brake rotor

Refer to the Dealer's Manual for the Wheels to install and remove the disc brake rotor.

# Installing the dual control levers

**NOTICE**

- Wireless gear shifting requires the dual control levers to be paired with the rear derailleur. For information on pairing the components wirelessly with E-TUBE PROJECT, refer to the E-TUBE PROJECT user's manual . For information on pairing the components via a wired connection, refer to the dealer's manual for the rear derailleur (Di2) . The position of the E-TUBE port differs depending on the model.

- The ST-R7170 is for wireless gear shifting only. It does not support wired gear shifting.

1. **Turn over the bracket cover from the back side.**

   Gently turn over the ends of the bracket cover with both hands and slowly push them down.

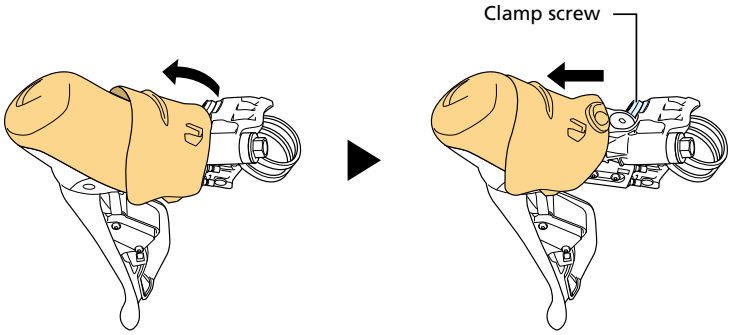


**NOTICE**

- Forcibly pulling the bracket cover may damage it because of its material properties.

2. **Loosen the clamp screw and pass the clamp band over the handlebar.**

   The clamp screw is found on top of the lever bracket when the bracket cover is turned over.

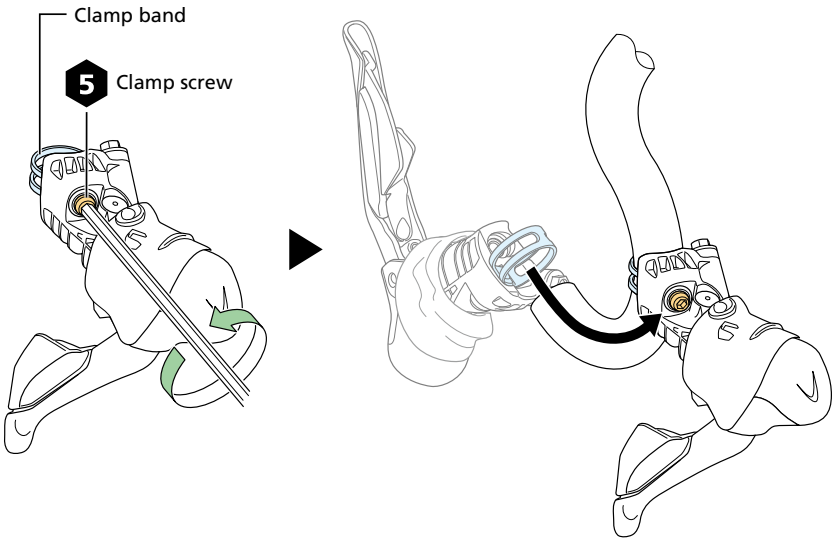


**NOTICE**

- Be sure to loosen the clamp screw sufficiently. Otherwise the handlebar may be damaged when passing the clamp band over the drop handlebar.

3. **Temporarily install the lever to the handlebar.**

   Temporarily install the lever so that it cannot move.

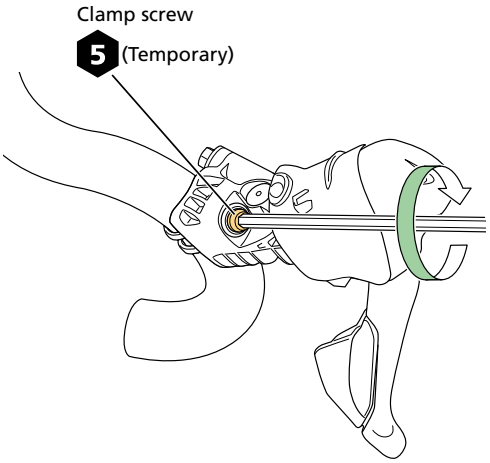


**NOTICE**

- Use the parts indicated in the exploded view of the dual control levers when you replace the clamp band, clamp screw, or clamp nut.

4. **Connect the electric wire when making a wired connection. If required, first remove the dummy plug from the E-TUBE port.**

   Be sure to push it in firmly with the TL-EW300 until you feel a click.

   For instructions on using the TL-EW300, refer to the ROAD Di2 Series General Guide .

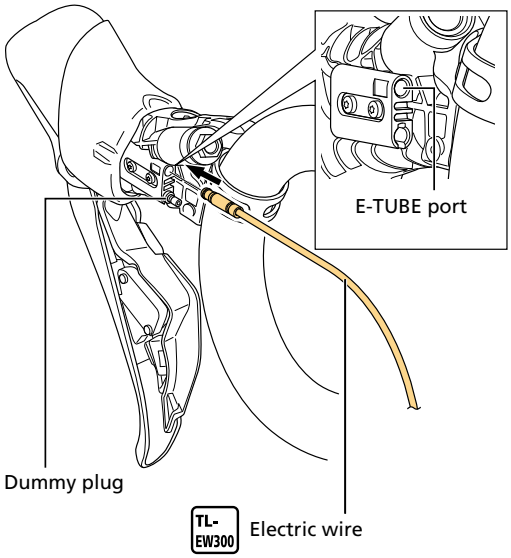


**NOTICE**

- It is possible for the electric wires to become disconnected accidentally while riding or winding the handlebar tape. By allowing sufficient wire length, accidental disconnection can be prevented after winding the handlebar tape.
- Ensure that the electric wire to connect to the dual control levers has extra length to make it easier to remove and insert when performing maintenance.

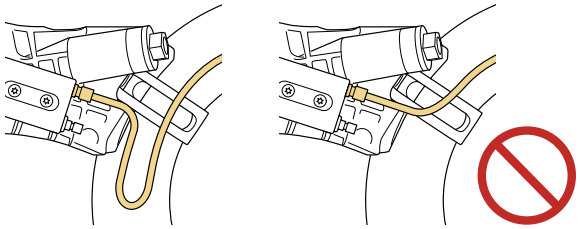

**TECH TIPS**

- PC linkage devices can be connected to the E-TUBE port when performing maintenance. However, leave the dummy plug attached to the unused E-TUBE port when a PC linkage device is not in use.

5. **After installing and connecting brake hose and electric wire, check the connections.**
6. **Secure the dual control levers to the handlebar.**

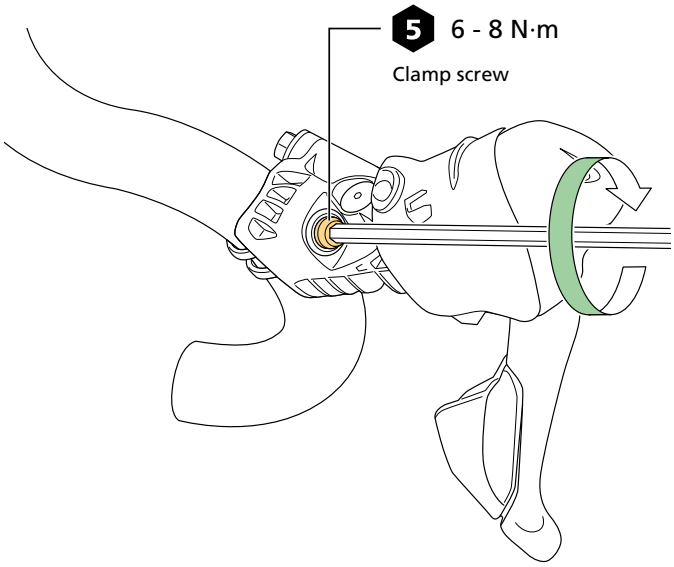
5
6 - 8 N·m
Clamp screw

# Installing satellite shifters

This section describes how to add a satellite shifter.

**NOTICE**

- A satellite shifter cannot be added to the ST-R7170 because it does not have a satellite shifter connection port.

## SW-RS801-T

### Routing map

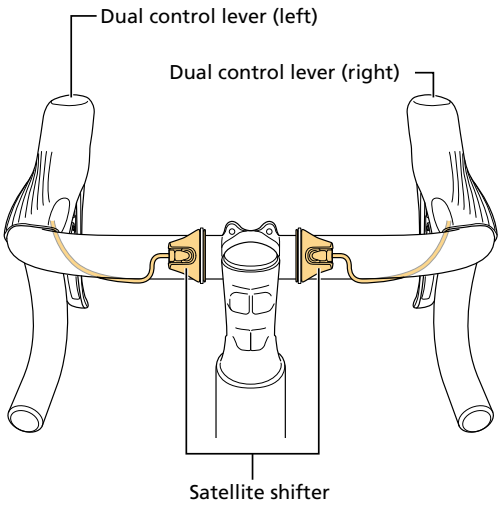


### Connection method

1. **Set the band on the shift unit.**

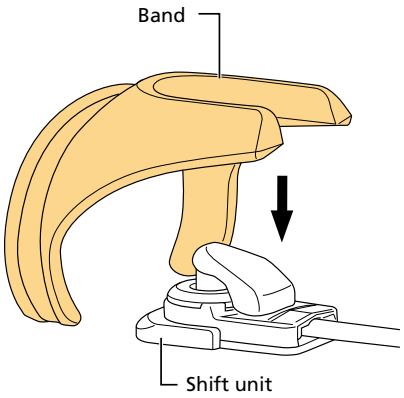


2. **Place the rubber sheet on the installation position and set the satellite shifter on top of it.**

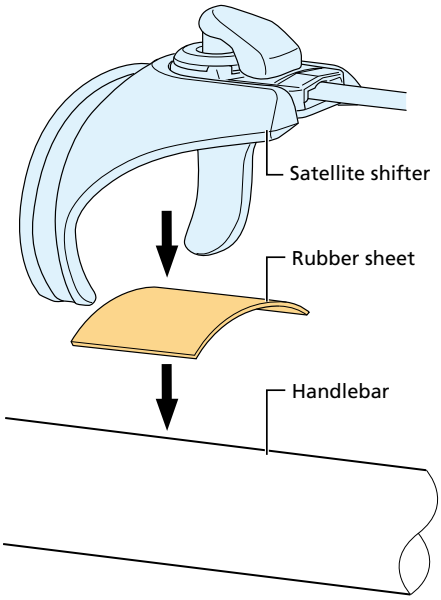


3. **Secure the satellite shifter to the handlebar with a zip tie.**

   Wind the zip tie aligned with the groove on the band.

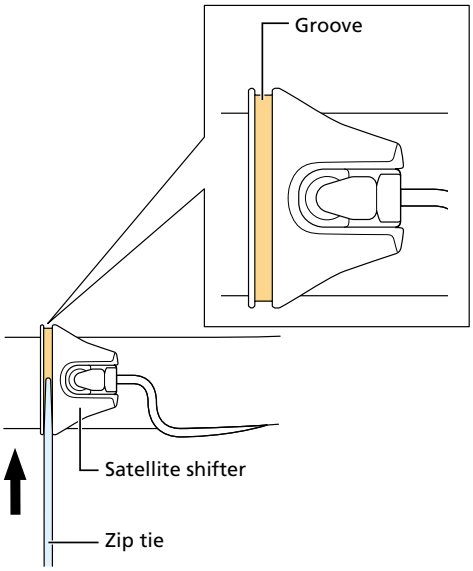


4. **Cut the remaining part of the zip tie using cutters, etc.**

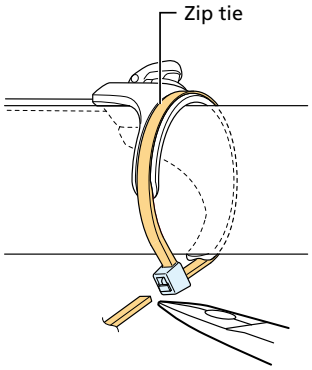


5. **Connect the electric wire of the satellite shifter to the satellite shifter connection port of the dual control levers.**

There is an alignment tab on the plug of the electric wire, which should be aligned with the shape of the satellite shifter connection port.

Be sure to push it in firmly with the TL-EW300 until you feel a click.

For instructions on using the TL-EW300, refer to the ROAD Di2 Series General Guide .

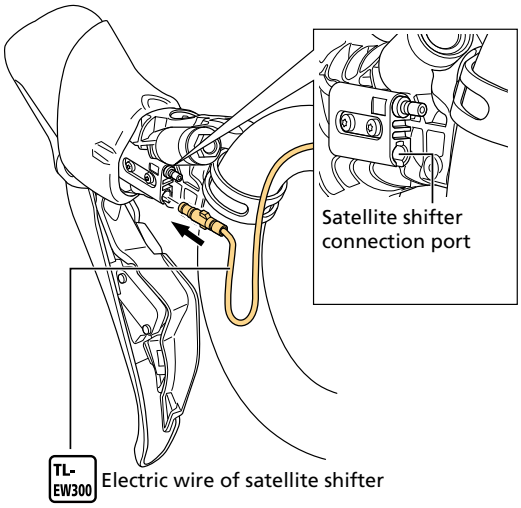


**NOTICE**

- When passing an electric wire through the frame, handlebar, or other parts, protect the plug with masking tape or a similar material to prevent foreign matter from getting inside.

**TECH TIPS**

- If there is length to spare in the electric wire of the satellite shifter, retaining it on the dual control lever side will make it easier to remove and insert wiring when performing maintenance.

# SW-RS801-E / SW-RS801-S

## Routing map

**SW-RS801-E**

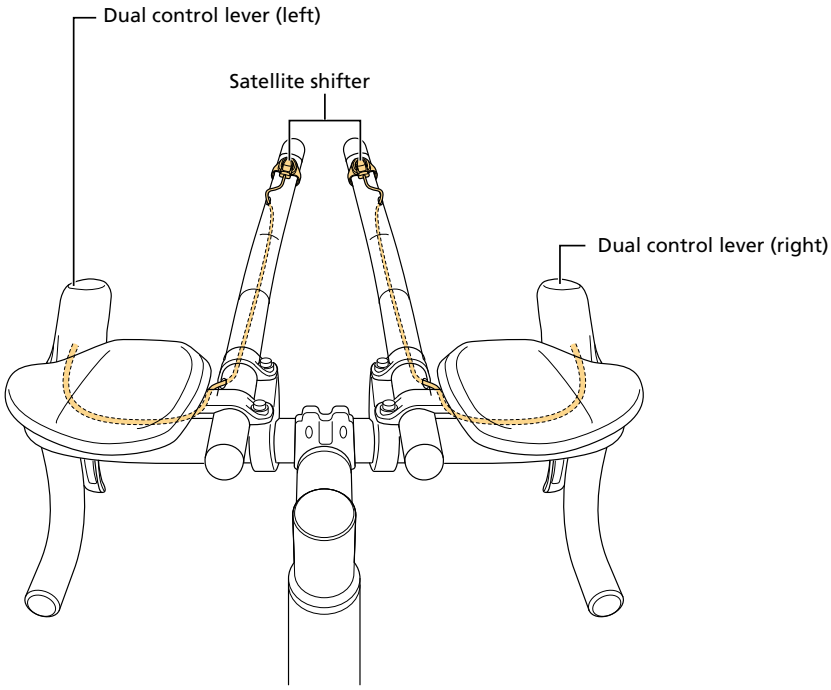


**SW-RS801-S**

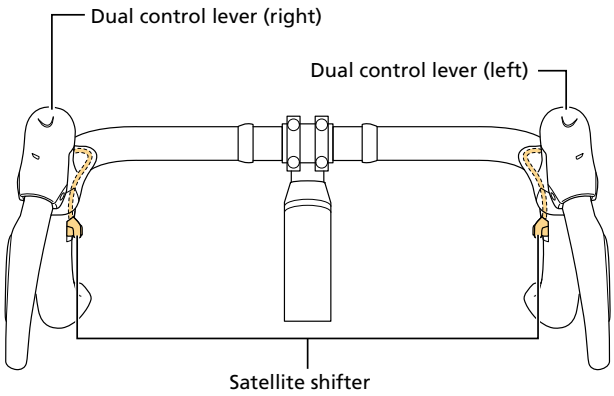


## Connection method

1. **Use a utility knife or a similar tool to cut the handlebar tape to the length of 80 mm.**

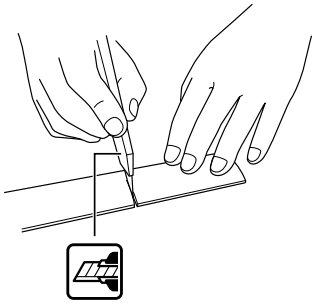

**NOTICE**

- Make sure that you handle the utility knife safely and correctly in accordance with the instructions which are provided with the utility knife.

2. **Make a hole in the cut handlebar tape for the button of the satellite shifter to pass through (13 mm x 9**

**mm).**

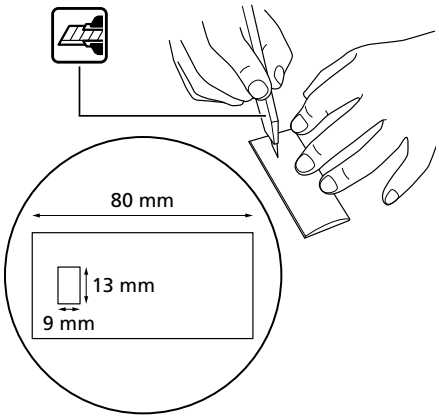


3. **Set the band on the shift unit.**

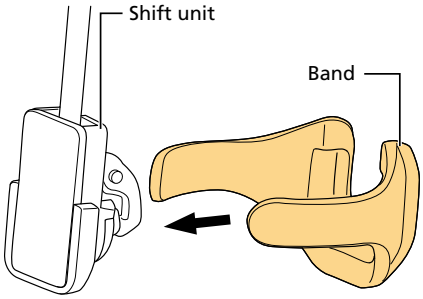


4. **Affix double-sided tape to the satellite shifter.**

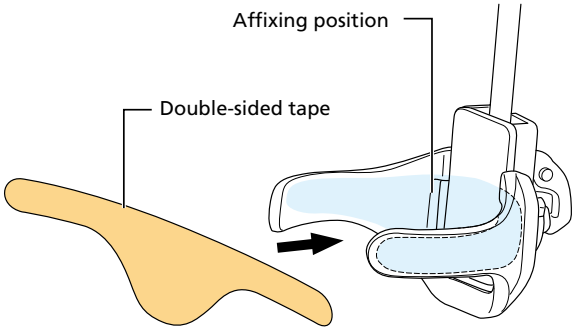


5. **Connect the electric wire of the satellite shifter to the satellite shifter connection port of the dual control levers.**

   There is an alignment tab on the plug of the electric wire, which should be aligned with the shape of the satellite shifter connection port.

   Be sure to push it in firmly with the TL-EW300 until you feel a click.

   For instructions on using the TL-EW300, refer to the ROAD Di2 Series General Guide .

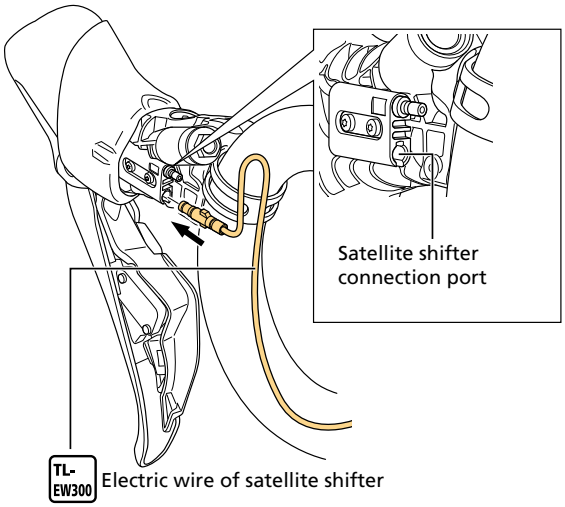


**NOTICE**

- When passing an electric wire through the frame, handlebar, or other parts, protect the plug with masking tape or a similar material to prevent foreign matter from getting inside.

6. **Mark the installation position, and affix the satellite shifter to the handlebar using double-sided tape.**

**SW-RS801-E**

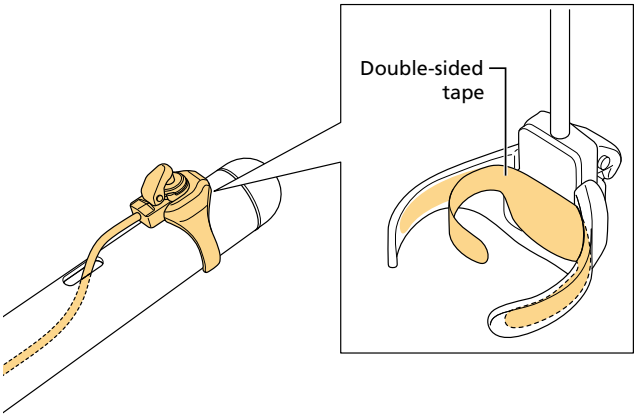


**SW-RS801-S**

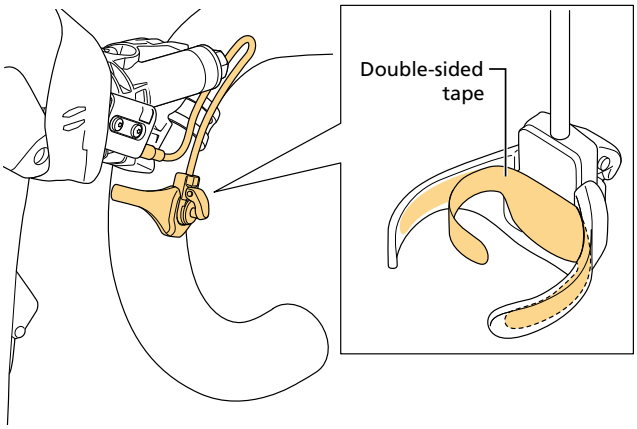

**NOTICE**

- The adhesive force weakens if there is any dirt, water or oil on the surface where the double-sided tape is applied.

7. **Align the cut hole in the handlebar tape with the button.**

**SW-RS801-E**

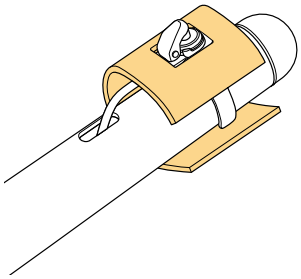

**SW-RS801-S**

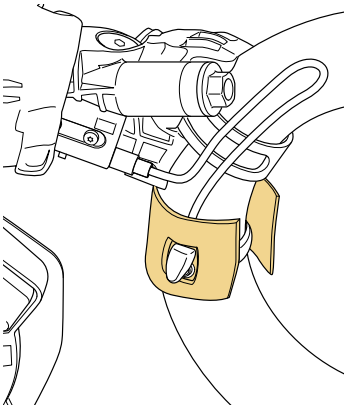

8. **Wind on the handlebar tape.**

Wind the handlebar tape on securely so that the satellite shifter does not move.

**SW-RS801-E**

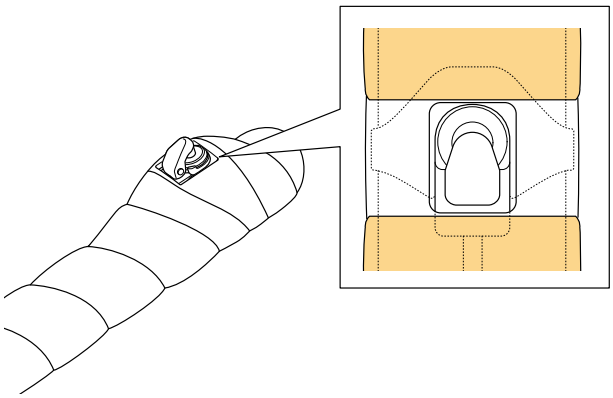

**SW-RS801-S**

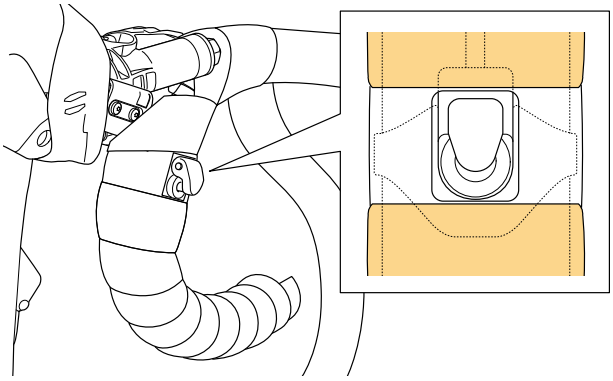

**NOTICE**

- In order to protect the electric wire, use handlebar tape to secure the wire. Do not secure the wire with the zip tie or the bracket for the cycle computer.

**TECH TIPS**

- The illustration shows an example of how to wind the handlebar tape.

# Troubleshooting

Check the following information if you have a problem.

If the problem is not covered below or cannot be solved with the indicated method, contact a distributor.

| Symptoms | Causes / possibilities | Remedies |
|---|---|---|
| **Click cannot be felt when connecting an electric wire.**<br>**Cannot fully connect a wire.** | Is there foreign matter inside the plug or satellite shifter connection port? | Check that there is no foreign matter inside the plug or satellite shifter connection port. If foreign matter is present, use a blower to remove it. If the problem persists, replace the satellite shifter with a new one. |

# Installing the brake hose (easy hose joint system)

## Overview of the easy hose joint system

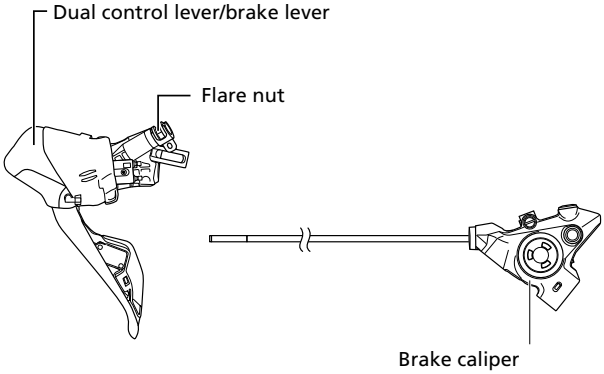


## Checking the length of the hose

1. **Route the brake hose into the final installation position.**

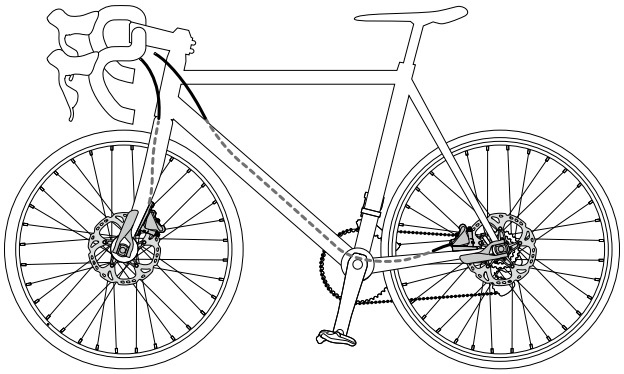

**NOTICE**

- This figure is only for explanatory purposes. For details on how to route the brake hoses, consult the manufacturer of the bicycle or refer to the bicycle's manual.

2. **Check the appropriate length of the brake hose.**

   Secure the lever in the position used when riding.

   Check the mark on the brake hose with the edge of the brake lever flare nut.

   * If the hose is at the appropriate length, it is not necessary to cut the hose. Proceed to " Connecting the hose " in "Installing the brake hose (easy hose joint system)."

   * If the hose needs to be shortened, proceed to " Cutting the hose " in "Installing the brake hose (easy hose joint system)" to shorten the hose.

   * If the hose length is insufficient, replace with a hose that has an appropriate length.

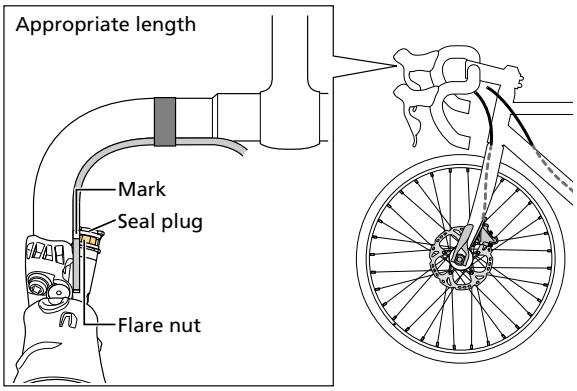


## Cutting the hose

Use care when cutting the hose, as oil may leak when the hose is cut.

**NOTICE**

- Make sure to also refer to the manual for TL-BH62.

1. **Determine the appropriate length and add a witness mark on the brake hose.**

   Add the mark so it is aligned with the edge of the flare nut.

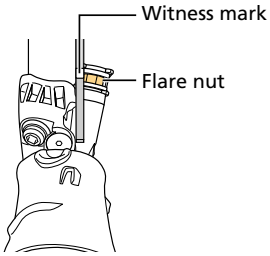


2. **Add a cut mark.**

   Mark the hose at a position 21 mm from the witness mark towards the end of the hose.

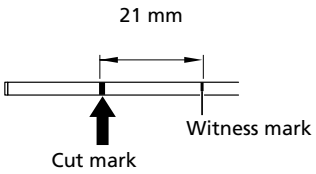


3. **Prepare tool TL-BH62 for the cutting of the brake hose.**

   Do not move the lever indicated in the figure before disassembling TL-BH62.

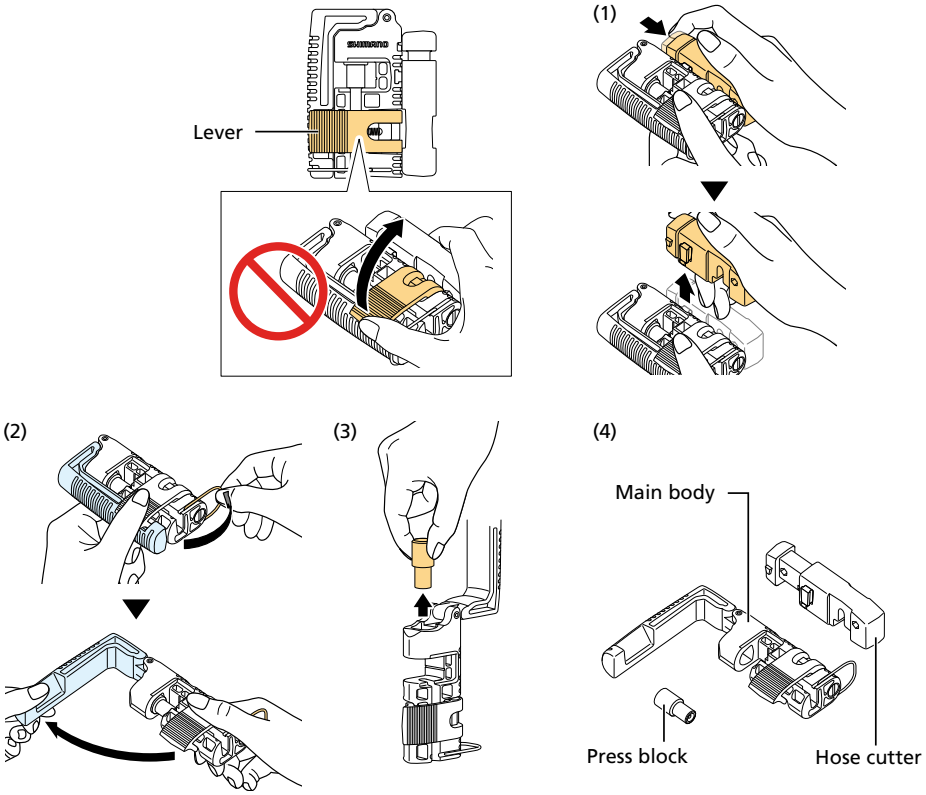


**4. Insert the brake hose into the TL-BH62.**

When placing the brake hose, make sure that the cut mark is parallel with the alignment groove in the tool.

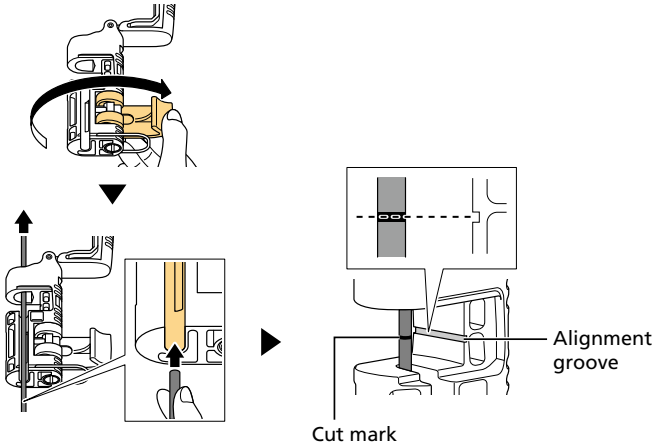


**5. Check the cut location and secure the brake hose in place.**

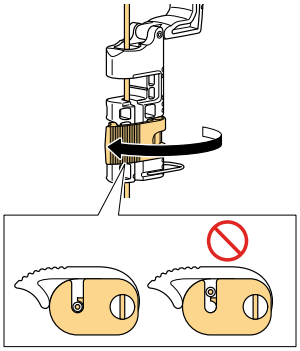

**6. Check that the hose is secure, then install the hose cutter.**

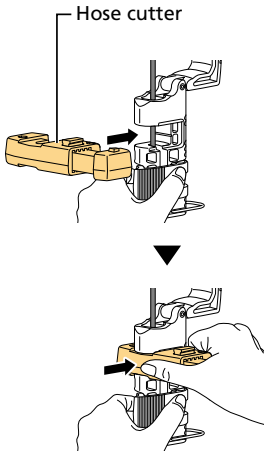


**7. Press the hose cutter as shown in the figure to cut the brake hose.**

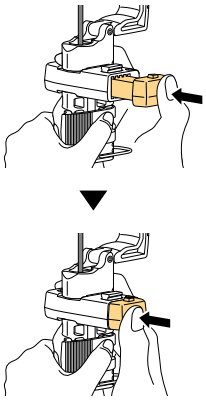

**8. Remove the hose cutter and check that the cut end is even.**

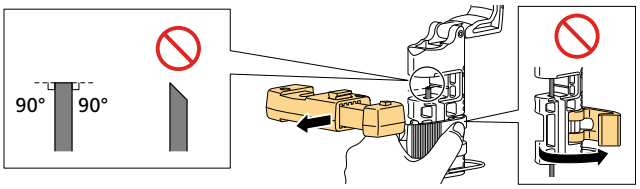


**9. Install the connector insert in the press block, then set the press block in the TL-BH62.**

Make sure that the tip of the connector insert is correctly positioned inside the opening of the brake hose.

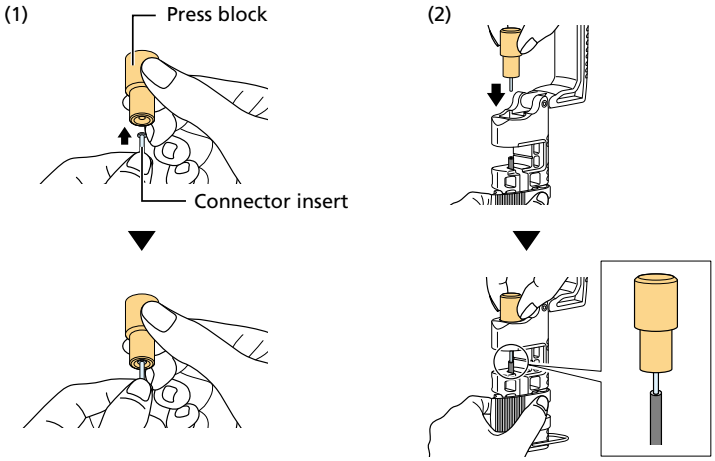

**NOTICE**

- When connecting with an easy hose joint system, a specific Connector Insert (SHIMANO CODE No.: Y8JA98020/color: silver) must be used. Use of any connector insert other than the specified one may lead to oil leakage and other malfunctions.

**10. Depress the lever on the TL-BH62 to install the connector insert in the brake hose.**

Check that the connector insert is installed correctly.

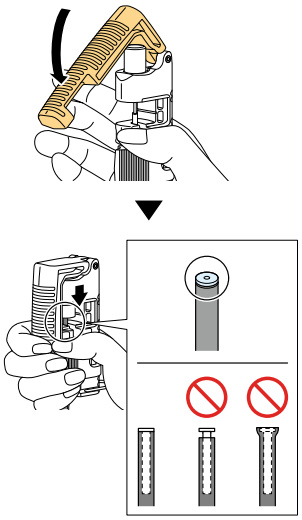

**11. Remove the brake hose from the TL-BH62.**

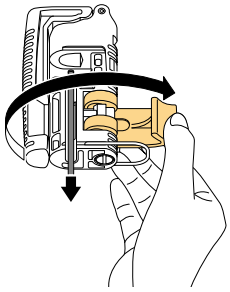

## Connecting the hose

**1. Secure the lever with the hose connector facing up by changing the angle of the handlebar, etc.**

Perform this task with the brake caliper removed from the frame as needed.

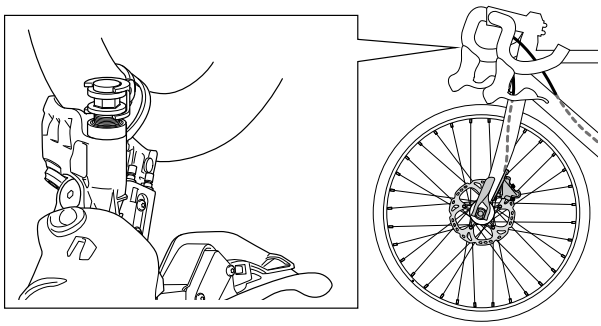

**NOTICE**

- You may need to adjust the angle of the lever outward in order to gain clearance for the spanner. Be careful not to damage the handlebar and other parts when doing so.

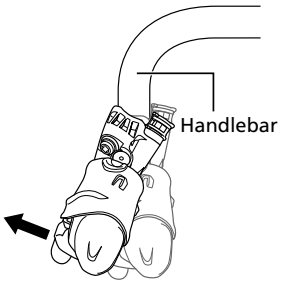


2. **Remove the plug holder.**

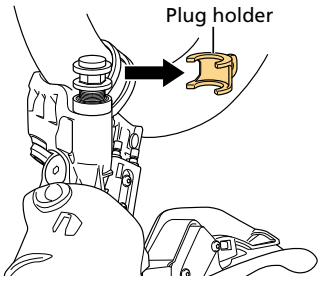


3. **Remove the seal plug.**

   Use a clean rag to keep oil from dripping off the seal plug.

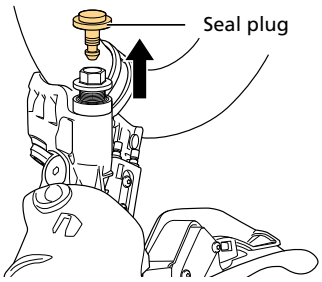


4. **Insert the brake hose in the brake hose connection port.**

   The lever comes with a pre-installed olive. When inserting the hose, ensure it does not snag on the olive.

   Insert the hose up to the witness mark on the outer hose casing.

   Cover with a clean rag while conducting this procedure as some of the internal oil may leak.

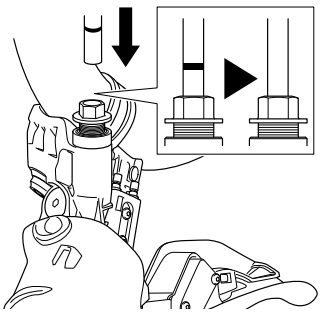

5. **Tighten the flare nut with flange.**

   Tighten the flare nut with flange while pushing the brake hose in.

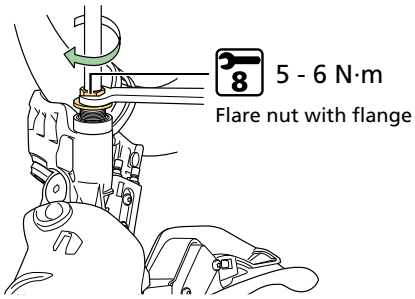


**NOTICE**

- Make sure to fully insert the brake hose and tighten the flare nut. Otherwise, oil leaks or insufficient braking force may occur.

6. **Wipe away any excess oil.**
7. **Check that the pad spacer is installed in the caliper.**
8. **Operate the brake lever several times. Check that the brake pads grip the pad spacer and that the lever becomes stiff.**

   If the lever does not become stiff, refer to " Adding mineral oil and bleeding air " and bleed the air from the system.

# Installing the brake hose

## Connecting the hose

1. **Cut the brake hose and install the connector insert.**

   Refer to " Cutting the hose " in "Installing the brake hose (easy hose joint system)."

2. **Pass the brake hose through the flare nut and olive as shown in the figure.**

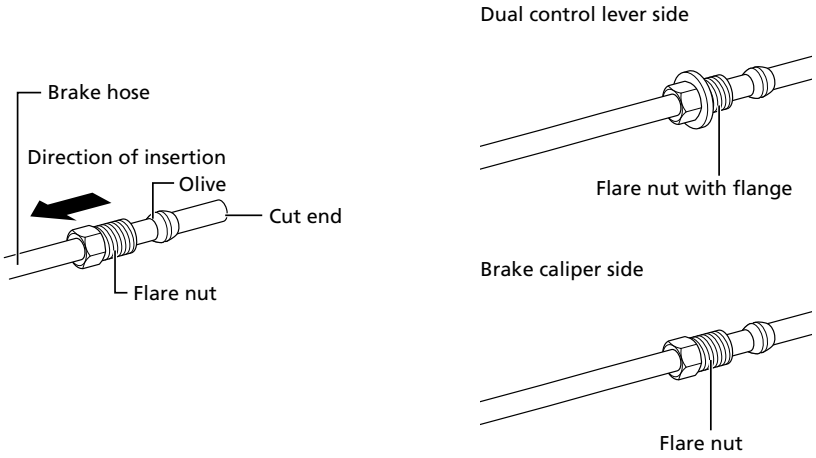


**NOTICE**

- Use a flare nut with flange on the dual control lever side.

3. **Check that the olive is in the position shown in the figure, then apply SHIMANO Premium Grease to the threads of the flare nut and outer surface of the olive.**

Dual control lever side

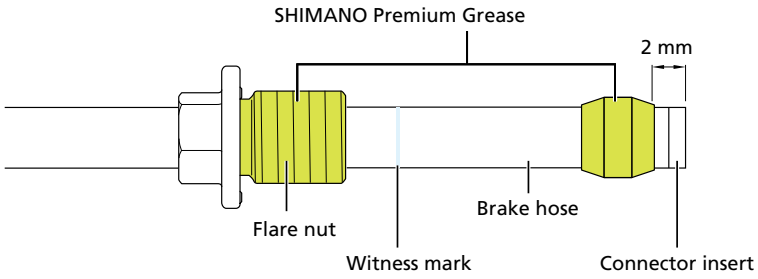


Brake caliper side

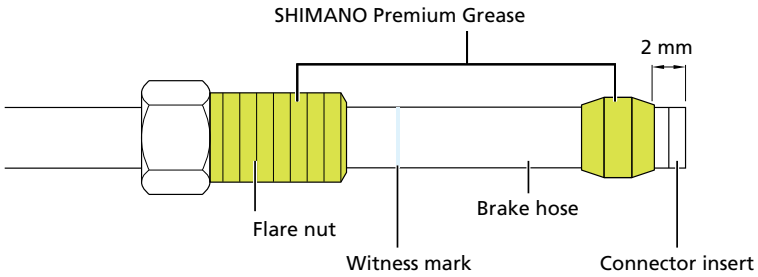

**⚠ WARNING**

- Use the dedicated connector insert supplied with SM-BH90-JK-SS. Use of any connector insert other than the one supplied may produce a loose assembly, which may prevent the brakes from operating and result in serious injury due to a fall or collision.

  Model number: SM-BH90-JK-SSR

  Length: 11.2 mm

  Color: Silver

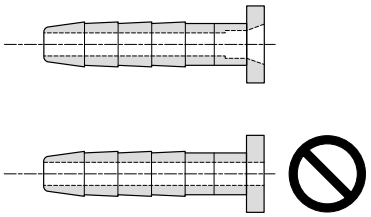

**4. Insert the brake hose.**

Insert the hose up to the witness mark on the outer hose casing.

Make sure that the brake hose is not twisted.

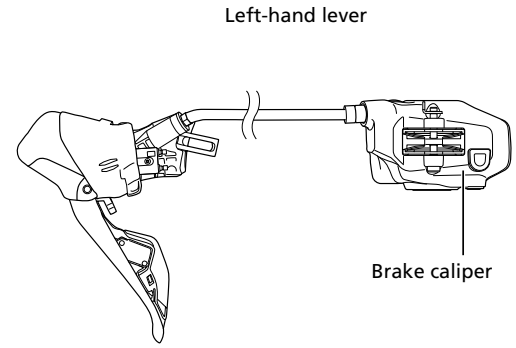


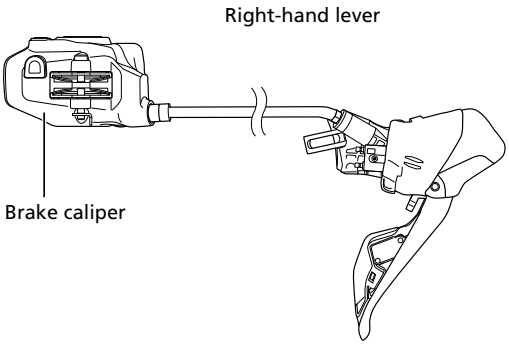


**5. Secure the brake hose.**

(1) Secure the dual control levers to the handlebar.

(2) Tighten the flare nut with flange to the lever while pushing the brake hose.

(3) Tighten the flare nut to the caliper while pushing the brake hose.

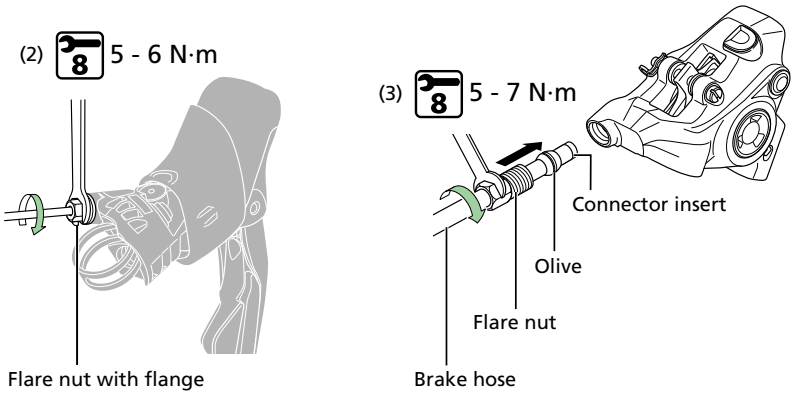


**NOTICE**

- Make sure the brake hose is straight when pushing.
- You may need to adjust the angle of the lever outward in order to gain clearance for the spanner. Be careful not to damage the handlebar and other parts when doing so.

**6. Temporarily secure the brake hose to the handlebar (by using tape or a similar material).**

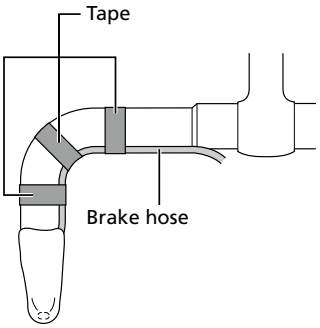

# Installing the brake calipers

## Installing the brake pads

1. **Remove the bleed spacer (yellow).**
   (1) Remove the retaining clip.
   (2) Remove the pad axle.
   (3) Remove the bleed spacer (yellow).

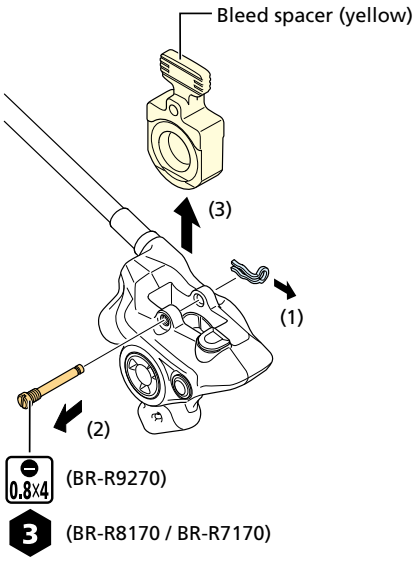


**NOTICE**

- Check the shape of the bleed spacer (yellow) and ensure you use the correct type.

2. **Set the pad presser spring in the brake pads.**
   Set the pads as shown in the figure.

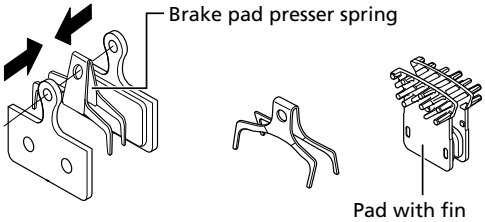


3. **Install the brake pads.**
   (1) Set the brake pads in the caliper.
   (2) Insert the pad axle.
   (3) Install the retaining clip.
   (4) Install the pad spacer (orange).

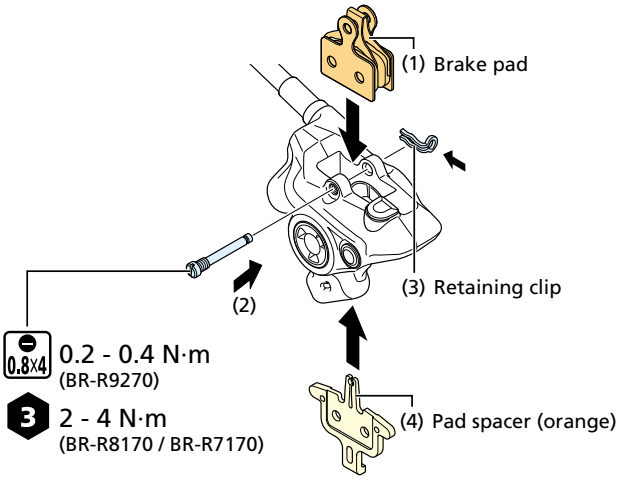


**NOTICE**

- When using pads with fins, take note of the left (L) and right (R) markings when setting them.

4. **Depress the brake lever several times.**

   Perform this operation only after the brake hose has been installed to the dual control levers. For instructions, see the section " Installing the brake hose ."

   Remove the pad spacer (orange) after depressing the brake lever several times.

# Installing to the frame

With the brake pads in place, install the caliper to the frame. The installation method differs according to the disc brake rotor used.

## Installation with a mount bracket: When using a Ø140 mm disc brake rotor (140/160 mm mount) or a Ø160 mm disc brake rotor (160/180 mm mount)

**NOTICE**

- A dedicated mount bracket may be required depending on the frame and disc brake rotor combination.

| Disc brake rotor size | Fork mount type | |
|---|---|---|
| | Flat mount 140/160 front | Flat mount 160/180 front |
| Ø140 mm (SS) | For ϕ140 or ϕ160 for 160/180 mount | - |
| Ø160 mm (S) | For ϕ160 or ϕ180 for 160/180 mount | For ϕ140 or ϕ160 for 160/180 mount |
| Ø180 mm (M) | - | For ϕ160 or ϕ180 for 160/180 mount |

1. **Install the wheel with an attached disc brake rotor onto the frame.**
2. **Attach the mount bracket to the brake caliper.**

(1) Tighten it using caliper fixing screws B/B2.

(2) Install the screw fixing pin.

* Check that the screw fixing pin is fully inserted all the way to the back.

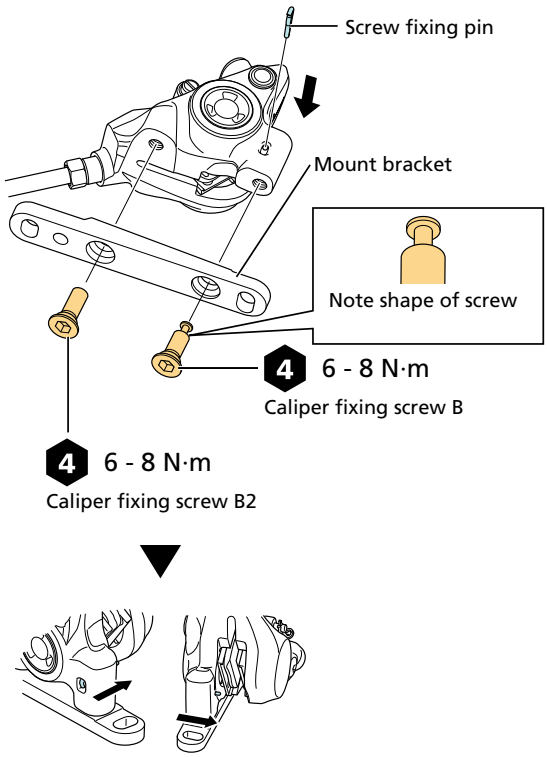


**⚠ CAUTION**

- Correctly install caliper fixing screw B. There are two types of caliper fixing screws, and only caliper fixing screw B can be retained using a screw fixing pin. Failing to install correctly may cause the caliper fixing screws to fall out or lead to insufficient force for holding the brake caliper.

***NOTICE***

- Pay attention to the marking on the mount bracket when attaching it.

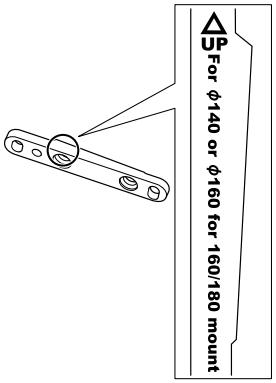


**3. Temporarily install the mount bracket to the frame so that it can move left and right.**

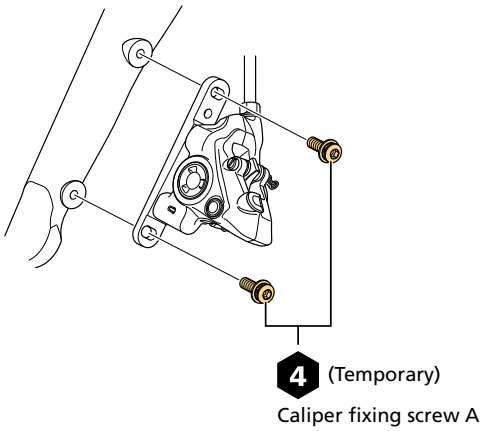


4. **Depress the brake lever so that the disc brake rotor is held between the pads, then tighten both caliper fixing screws A.**

   Perform this operation only after the brake hose has been installed to the dual control levers. For instructions, see the section " Installing the brake hose ."

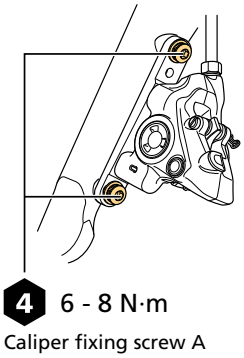


**TECH TIPS**

- Bring caliper fixing screws A up to torque in steps, alternating from one screw to the other. This will help keep the caliper centered over the disc brake rotor.

5. **Install the snap ring.**

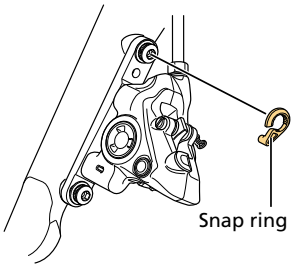


***NOTICE***

- Install the snap ring at the position specified in the figure.

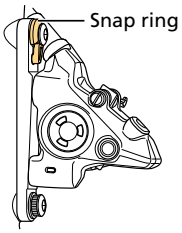


## Installation with a mount bracket: When using a Ø160 mm disc brake rotor (140/160 mm mount) or a Ø180 mm disc brake rotor (160/180 mm mount)

1. **Install the wheel with an attached disc brake rotor onto the frame.**
2. **Attach the mount bracket to the brake caliper.**
   (1) Tighten it using caliper fixing screws B/B2.
   (2) Install the screw fixing pin.
   * Check that the screw fixing pin is fully inserted all the way to the back.

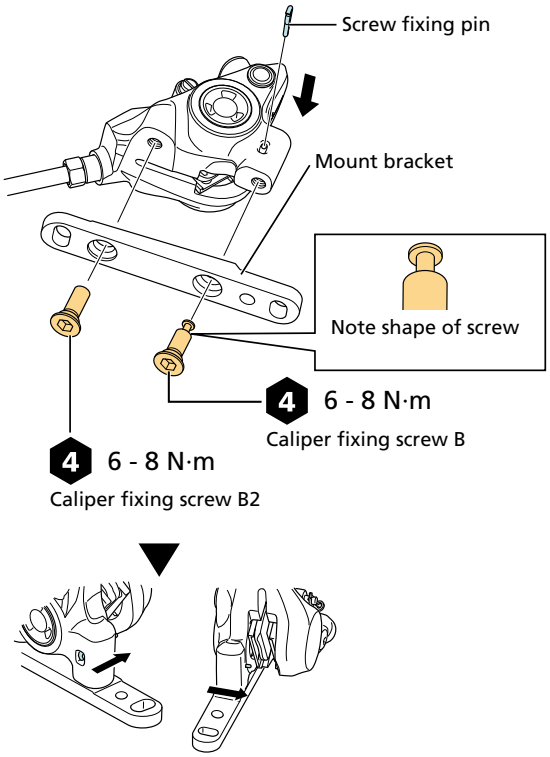


**⚠ CAUTION**

- Correctly install caliper fixing screw B. There are two types of caliper fixing screws, and only caliper fixing screw B can be retained using a screw fixing pin. Failing to install correctly may cause the caliper fixing screws to fall out or lead to insufficient force for holding the brake caliper.

**NOTICE**

- Pay attention to the marking on the mount bracket when attaching it.

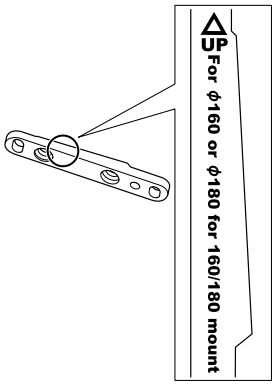


3. **Temporarily install the mount bracket to the frame so that it can move left and right.**

   As indicated in the figure, temporarily install the mount bracket to the frame with caliper fixing screws A passed through the holes of the mounting bracket in advance.

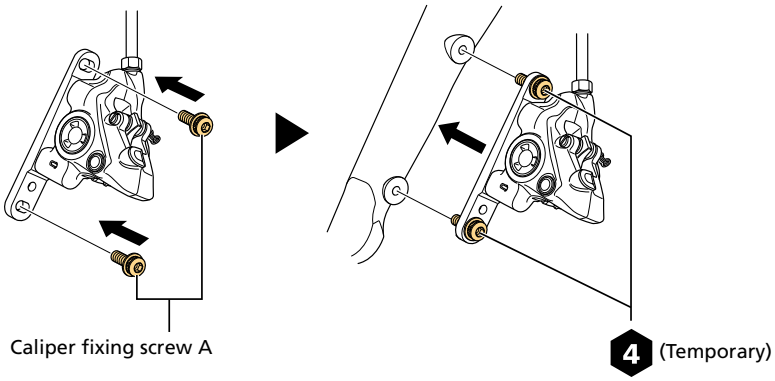


**NOTICE**

- Do not install the caliper fixing screws A after the mount bracket has been set against the frame. Doing so may cause interference between brake caliper and the caliper fixing screws A, which could result in damage to the caliper.

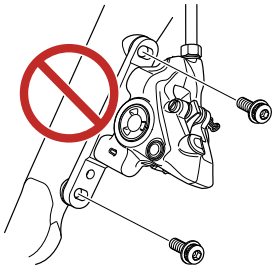

4. **Depress the brake lever so that the disc brake rotor is held between the pads, then tighten both caliper fixing screws A.**

   Perform this operation only after the brake hose has been installed to the dual control levers. For instructions, see the section " Installing the brake hose ."

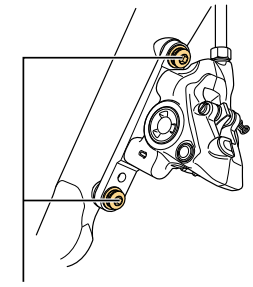

4 6 - 8 N·m
Caliper fixing screw A

**TECH TIPS**

- Bring caliper fixing screws A up to torque in steps, alternating from one screw to the other. This will help keep the caliper centered over the disc brake rotor.

5. **Install the snap ring.**

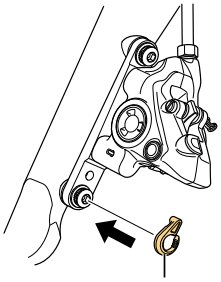

Snap ring

***NOTICE***

- Install the snap ring at the position specified in the figure.

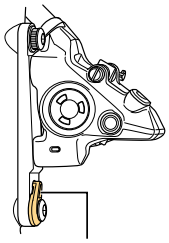

Snap ring

## Installation with the caliper fixing screw C/C2: When using a Ø140 mm disc brake rotor (140/160 mm mount) or a Ø160 mm disc brake rotor (160/180 mm mount)

1. **Insert the caliper fixing screws C/C2 into the frame mount area.**

   Make sure that the length of the protruding section of the caliper fixing screws C/C2 is the specified length.

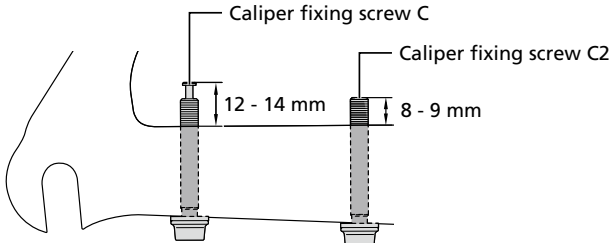


**NOTICE**

- When using a screw length selector:
  - Ensure the tip of caliper fixing screw C is within the range of dimension A.
  - Ensure the tip of caliper fixing screw C2 is within the range of dimension B.

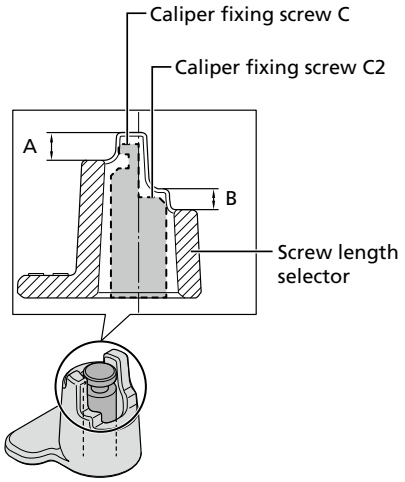


- Do not add any additional spacers to caliper fixing screws C/C2 when checking the length.
- The length of caliper fixing screws C/C2 to be used varies depending on the thickness of the frame. Use the caliper fixing screws C/C2 that are appropriate for the thickness of the frame.

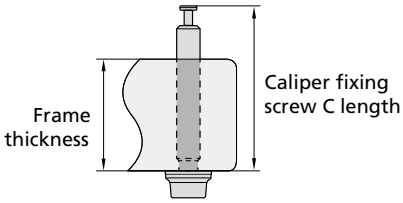


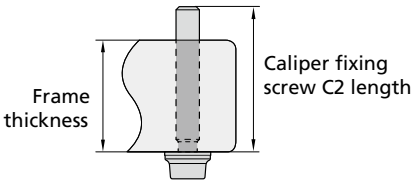


| Frame thickness | Caliper fixing screw C length | Caliper fixing screw C2 length |
|---|---|---|
| 10 mm | 23 mm (Y8N208000) | 19 mm (Y2J708000) |
| 15 mm | 28 mm (Y8N208050) | 24 mm (Y2J708050) |
| 20 mm | 33 mm (Y8PU08010) | 29 mm (Y2HW08010) |
| 25 mm | 38 mm (Y8PU08020) | 34 mm (Y2HW08020) |
| 30 mm | 43 mm (Y8PU08030) | 39 mm (Y2HW08030) |
| 35 mm | 48 mm (Y8N208040) | 44 mm (Y2J708040) |

- A dedicated mount bracket may be required depending on the frame and disc brake rotor combination.

| Disc brake rotor size | Frame mount type | |
|---|---|---|
| | Flat mount 140/160 rear | Flat mount 160/180 rear |
| Ø140 mm (SS) | Mount bracket not required | - |
| Ø160 mm (S) | SM-MA-R160 D/D | Mount bracket not required |
| Ø180 mm (M) | - | SM-MA-R160 D/D |

* BR-R9270 is not compatible with rear 180 mm (M) disc brake rotor.

**2. Temporarily install the brake caliper to the frame so that the brake caliper can still move horizontally.**

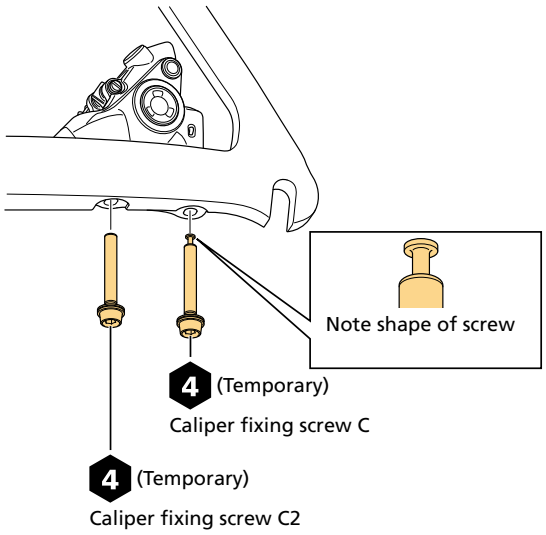


**⚠ CAUTION**

- Correctly install caliper fixing screw C. There are two types of caliper fixing screws, and only caliper fixing screw C can be retained using a screw fixing pin. Failing to install correctly may cause the caliper fixing screws to fall out or lead to insufficient force for holding the brake caliper.

**3. Depress the brake lever so that the disc brake rotor is held between the pads, then tighten the caliper fixing screws C/C2.**

Perform this operation only after the brake hose has been installed to the dual control levers. For instructions, see the section " Installing the brake hose ."

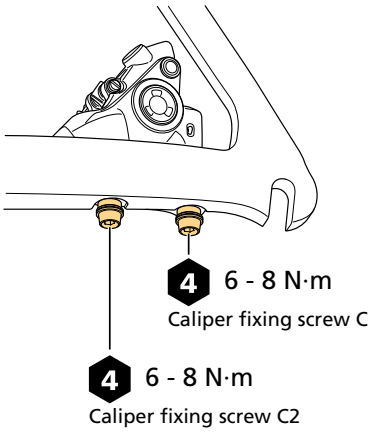


4. **Install the screw fixing pin.**

   Check that the screw fixing pin is fully inserted all the way to the back.

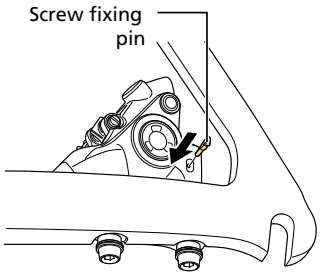


## Installation with the caliper fixing screw C/C2: When using a Ø160 mm disc brake rotor (140/160 mm mount) or a Ø180 mm disc brake rotor (160/180 mm mount)

1. **Check the length of caliper fixing screw C/C2.**

   Refer to step 1 in “Installation with the caliper fixing screw C/C2: When using a Ø140 mm disc brake rotor (140/160 mm mount) or a Ø160 mm disc brake rotor (160/180 mm mount).”

2. **Attach the mount bracket to the brake caliper.**

   (1) Tighten it using caliper fixing screws B/B2.

   (2) Install the screw fixing pin.

   * Check that the screw fixing pin is fully inserted all the way to the back.

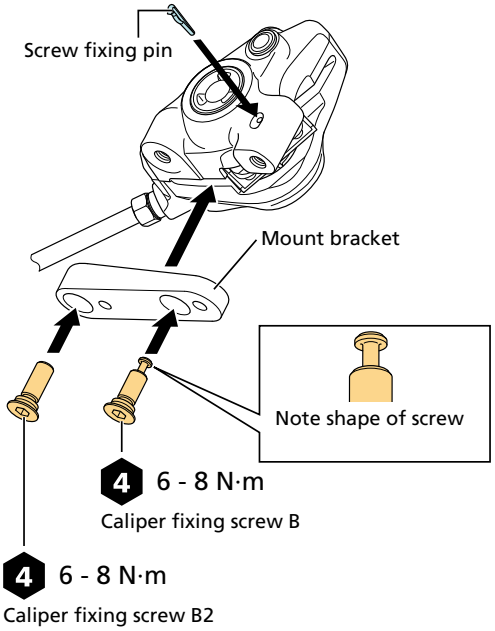


**CAUTION**

- Correctly install caliper fixing screw B. There are two types of caliper fixing screws, and only caliper fixing screw B can be retained using a screw fixing pin. Failing to install correctly may cause the caliper fixing screws to fall out or lead to insufficient force for holding the brake caliper.

**NOTICE**

- Pay attention to the marking on the mount bracket when attaching it.

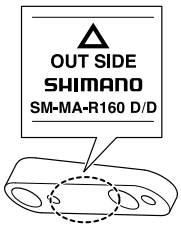


3. **Temporarily install the mount bracket to the frame so that it can move left and right.**

   Temporarily install it using caliper fixing screws C/C2 with an additional spacer under each screw head.

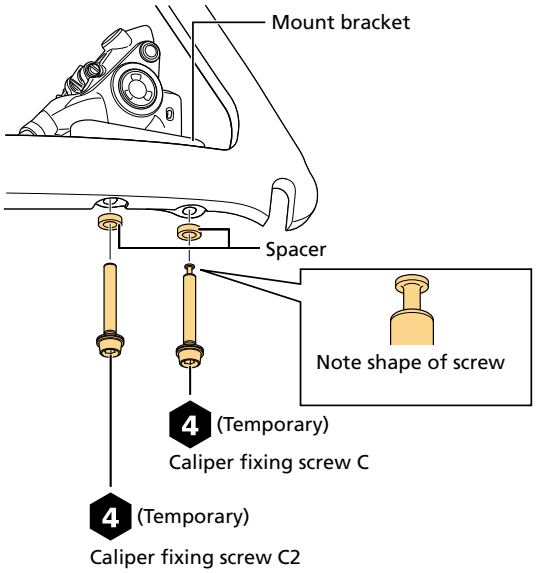


**CAUTION**

- Correctly install caliper fixing screw C. There are two types of caliper fixing screws, and only caliper fixing screw C can be retained using a screw fixing pin. Failing to install correctly may cause the caliper fixing screws to fall out or lead to insufficient force for holding the brake caliper.

4. **Depress the brake lever so that the disc brake rotor is held between the pads, then tighten the caliper fixing screws C/C2.**

   Perform this operation only after the brake hose has been installed to the dual control levers. For instructions, see the section " Installing the brake hose ."

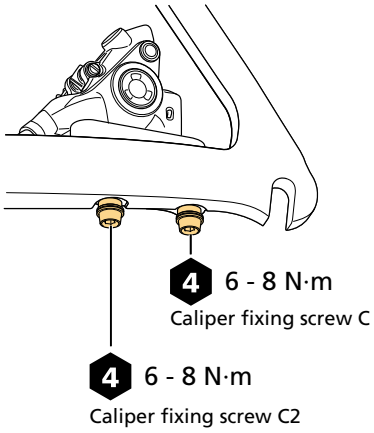


5. **Install the retaining clip.**

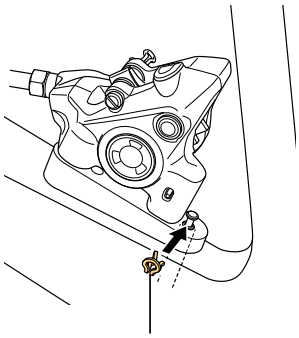
Retaining clip

# Adjustment

## Adjusting the reach

1. **Turn the reach adjustment screw to adjust the reach.**

   Tightening the reach adjustment screw (clockwise) widens the distance between the position of the brake lever and the handlebar, while loosening the screw (counterclockwise) narrows it.

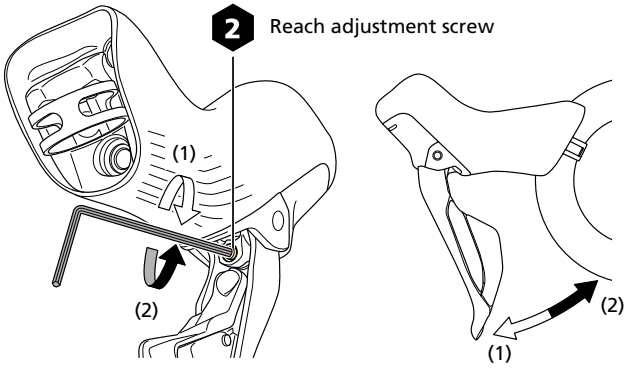

# Adjusting the free stroke

Adjust the amount of brake lever travel between the initial brake lever position and the point at which the brake pads contact the disc brake rotor. The free stroke adjustment moves only the initial position of the brake lever. If you want to move the pad engagement point relative to the handlebar, you must also perform a reach adjustment.

1. **Turn over the bracket cover from the front side.**

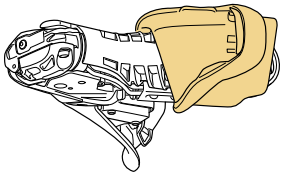

2. **Turn the free stroke adjustment screw to adjust the stroke.**

   Tightening the free stroke adjustment screw (clockwise) narrows the range of travel of the brake lever, while loosening the screw (counterclockwise) widens it.

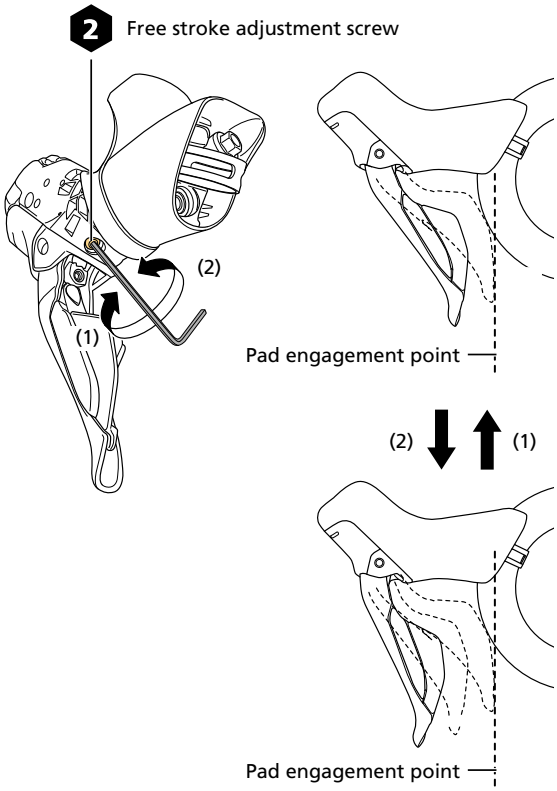


**NOTICE**

- Stop loosening the free stroke adjustment screw when the free stroke stops increasing. Loosening the free stroke adjustment screw excessively may cause the screw to fall out of the bracket body. Do not forcibly tighten the free stroke adjustment screw. Otherwise, the adjustment screw may be damaged.
- Do not remove the washer from the free stroke adjustment screw.
- Position the free stroke adjustment screw so that it does not interfere with the bracket cover.

# Maintenance

## Replacing the brake pads

Replace the brake pads in the following circumstances:

- When the brake pads become contaminated from oil, grease, etc.
- When the brake pads are worn down to a thickness of 0.5 mm
- When the brake pad presser spring is interfering with the disc brake rotor

1. **Remove the wheel from the frame.**
2. **Remove the brake pads from the caliper.**
   (1) Remove the retaining clip.
   (2) Remove the pad axle.
   (3) Remove the brake pads from the caliper.

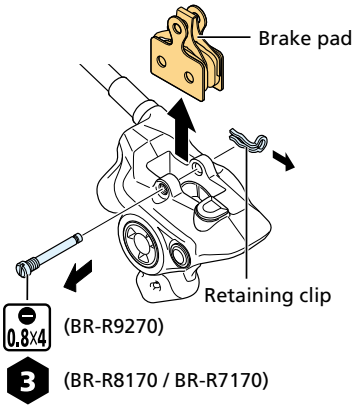


3. **Clean the pistons and the surrounding area.**
4. **Push the pistons straight back as far as they will go.**

   This brake system is designed to automatically adjust the gap between the disc brake rotor and the brake pads by the pistons gradually protruding in relation to the wear of the brake pads. As a result, when the brake pads are replaced, the pistons need to be pushed back into position.

   Use a flat-shaped tool to push the pistons back while being careful not to twist them.

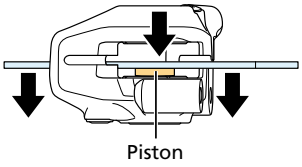


**NOTICE**

- Do not push the pistons with a sharp tool. Doing so may damage the pistons.

5. **Set a brake pad presser spring in the new brake pads.**

   Set the pads as shown in the figure.

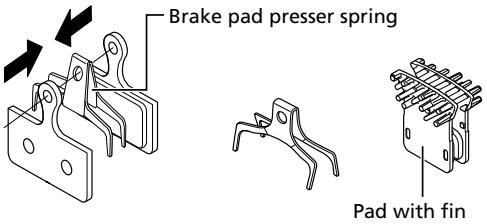


6. **Install the brake pads.**
   (1) Set the brake pads in the caliper.
   (2) Insert the pad axle.
   (3) Install the retaining clip.
   (4) Install the pad spacer (orange).

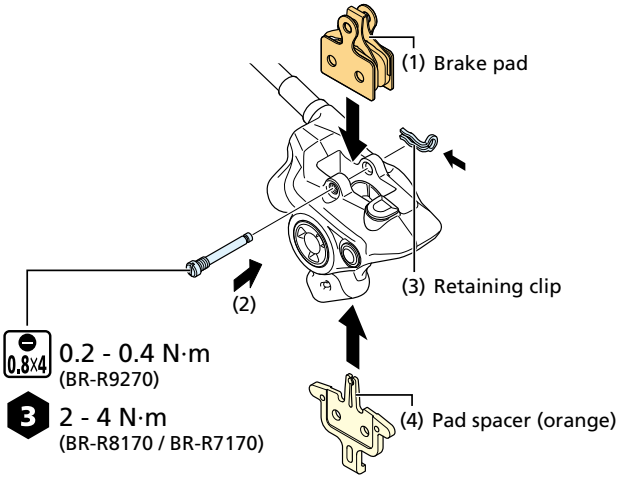


**NOTICE**

- When using pads with fins, take note of the left (L) and right (R) markings when setting them.

7. **Depress the brake lever a few times and make sure that the lever operation becomes stiff.**
8. **Remove the pad spacer and install the wheel.**
9. **Check that the disc brake rotor does not interfere with the brake pads.**

   If there is interference, check if the wheel is installed correctly. If there is no problem with the installation of the wheel, refer to " Installing the brake calipers " and adjust the position of the caliper.

**NOTICE**

- To optimize the performance of the brake pads and disc brake rotor after replacing the brake pads, perform the bed-in procedure as explained in the steps below:

  **(1)** Ride your bicycle in a flat and safe area without obstacles and accelerate to a moderate speed.

  **(2)** Operate the brake lever until you slow down to walking speed.

  Do this only with one brake lever at a time. Be careful when performing this procedure. Always operate your brake lever with moderation, especially when you bed in the front brake.

  **(3)** Repeat steps (1) and (2) at least 20 times for both the front and rear brakes.

  While repeating the process, the brake force will increase.

# SHIMANO genuine mineral oil replacement

It is recommended to change the oil when it becomes noticeably discolored.

## Draining the mineral oil

**⚠ CAUTION**

- Note the following cautions when handling SHIMANO genuine mineral oil:
  - Do not drink. May cause vomiting or diarrhea.
  - Keep out of reach of children.
  - Do not cut, let near heat, weld or pressurize the SHIMANO genuine mineral oil container. Doing so may cause an explosion or fire.
  - Disposal of used oil: Follow local county and/or state codes for disposal.
  - Directions: Keep the container sealed to prevent foreign objects and moisture from getting inside, and store it in a cool, dark area away from direct sunlight or heat. Keep from heat or flame.
  - For cleaning brake hoses exposed to mineral oil, or cleaning and maintaining tools, use isopropyl alcohol or a dry cloth. Do not use commercially available brake cleaners. Doing so may cause damage to plastic parts.

1. **Secure the bicycle so that it is parallel to the ground using a stand, etc.**

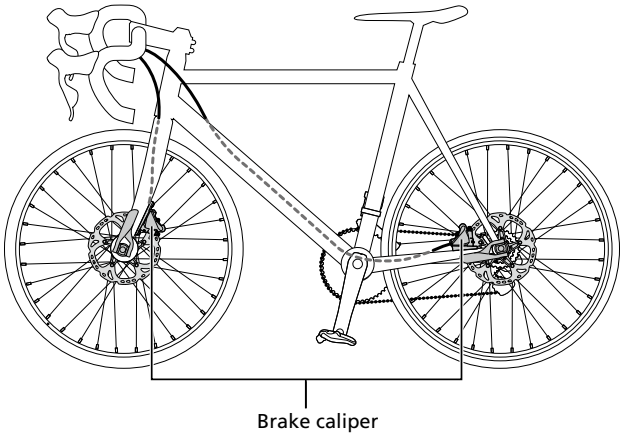


2. **Remove the brake pads from the caliper.**

   Remove the retaining clip, then remove the pad axle.

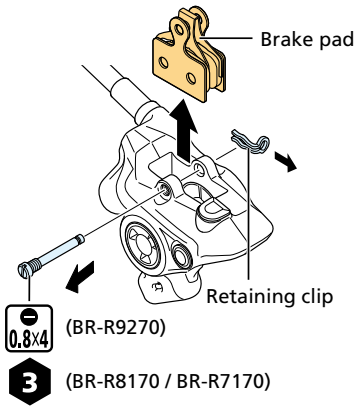


**3. Push the pistons straight back as far as they will go.**

Use a flat-shaped tool to push the pistons back while being careful not to twist them.

Do not push the pistons with a sharp tool. Doing so may damage the pistons.

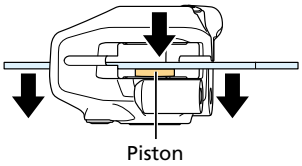


**4. Install the bleed spacer.**

(1) Set the bleed spacer (yellow) in the caliper.

(2) Insert the pad axle.

(3) Install the retaining clip.

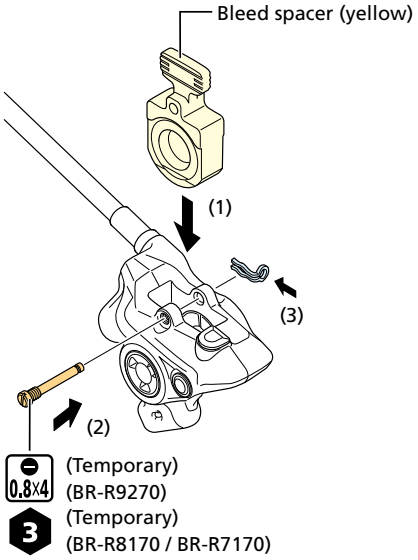


**5. Turn over the bracket cover from the back side.**

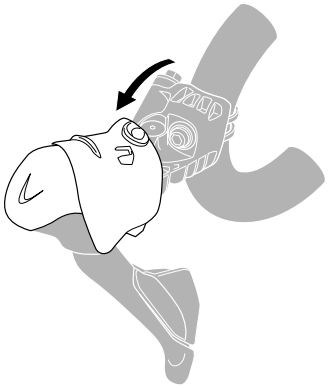

6. **Set the lever in a position where the top surface of the bleed screw is parallel with the ground.**

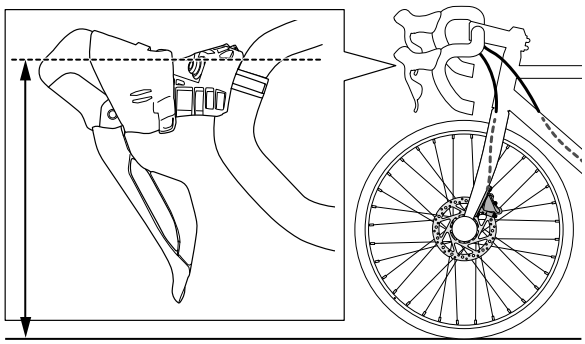

**NOTICE**

- When adjusting the angle of the brake lever, be careful not to strain the brake hose or electric wire to avoid damage.

7. **Remove the bleed screw and O-ring.**

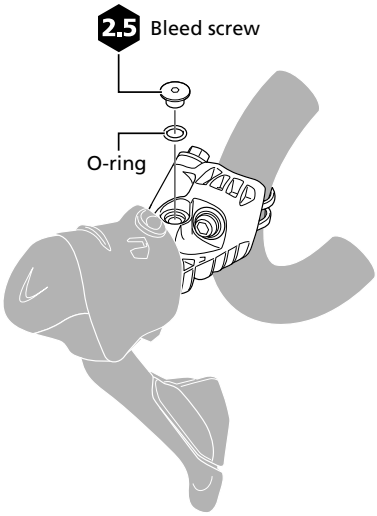


8. **Install a bag and tube on the bleed boss.**
   (1) Remove the bleed boss cap and bleed screw cap.
   (2) After attaching a bag to the tube, connect the tube to the bleed boss.

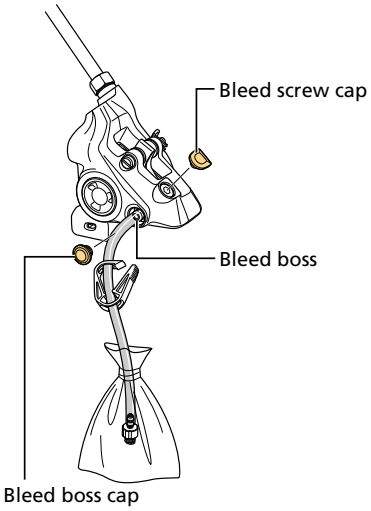


9. **Loosen the bleed screw.**

   The oil will begin to drain. Operating the brake lever while the oil drains will allow the oil to drain more quickly.

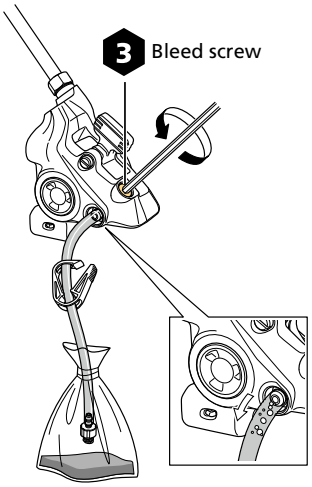


# Adding mineral oil and bleeding air

When adding oil, use only SHIMANO genuine mineral oil.

1. **Secure the bicycle so that it is parallel to the ground using a stand, etc.**

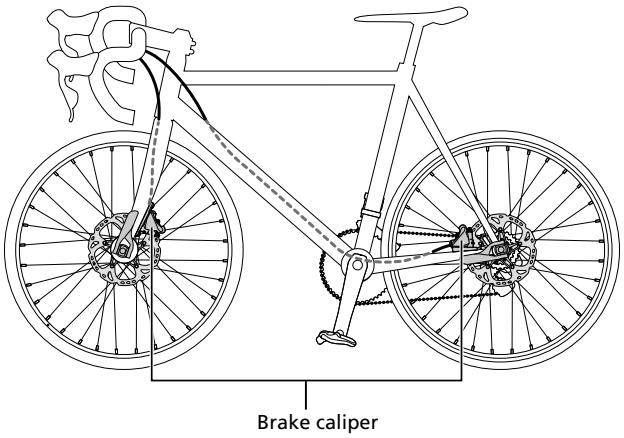

**NOTICE**

- When bleeding air you will need the TL-BR001 and TL-BR002 SHIMANO original bleed tools.

**2. Remove the brake pads from the caliper.**

Remove the retaining clip, then remove the pad axle.

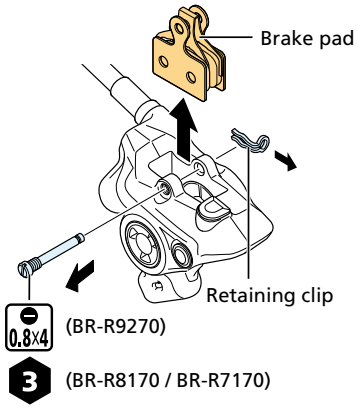


**3. Push the pistons straight back as far as they will go.**

Use a flat-shaped tool to push the pistons back while being careful not to twist them.

Do not push the pistons with a sharp tool. Doing so may damage the pistons.

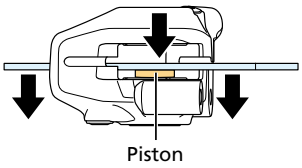


**4. Install the bleed spacer.**

(1) Set the bleed spacer (yellow) in the caliper.

(2) Insert the pad axle.

(3) Install the retaining clip.

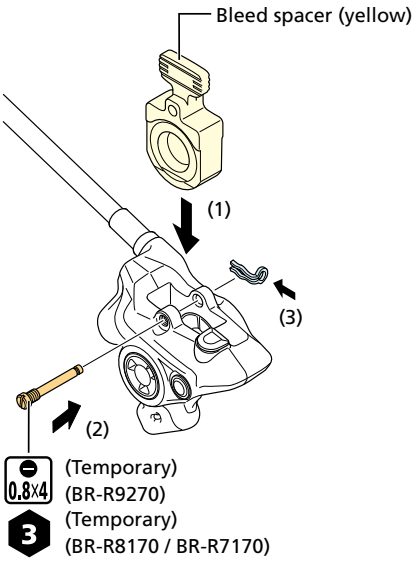

**TECH TIPS**

- When rebleeding, install the bleed spacer and operate the lever about 10 times to stabilize the position of the piston.

**5. Turn over the bracket cover from the back side.**

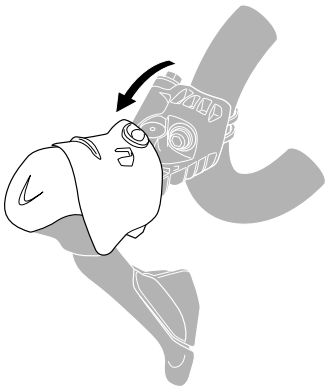

**6. Set the lever in a position where the top surface of the bleed screw is parallel with the ground.**

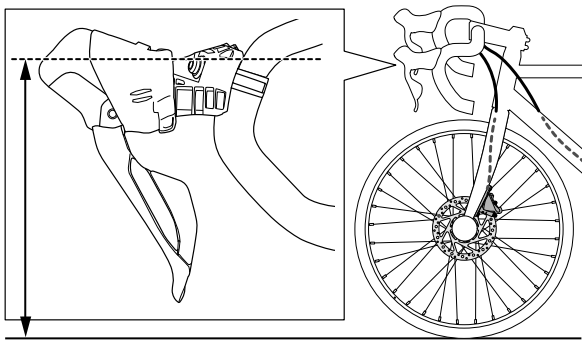

***NOTICE***

- When adjusting the angle of the brake lever, be careful not to strain the brake hose or electric wire to avoid damage.

**7. Remove the bleed screw and O-ring.**

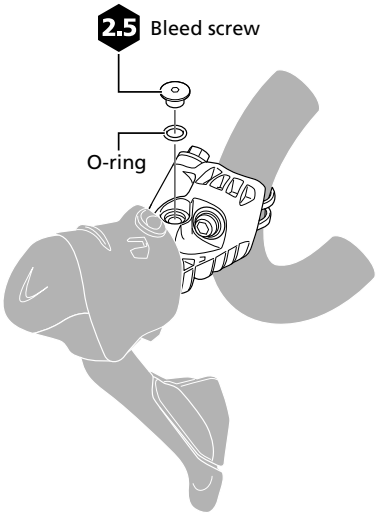


**NOTICE**

- Be careful not to drop the bleed screw or O-ring.

**8. Mount the oil funnel.**

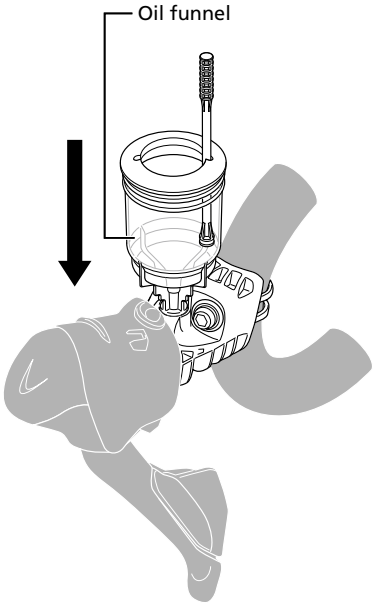


**9. Add the oil through the bleed boss.**

Do not depress the brake lever while adding oil. Doing so may introduce air bubbles into the system. If the lever was depressed, drain the oil and re-start the process.

(1) Remove the bleed boss cap and bleed screw cap.

(2) Fill a syringe with oil, then connect the tube to the bleed boss.

(3) Loosen the bleed screw by 1/2 of a turn.

(4) Push the piston of the syringe to add the oil.

(5) Oil will start to come out from the oil funnel. Continue adding the oil until there are no more air bubbles in the oil that is coming out.

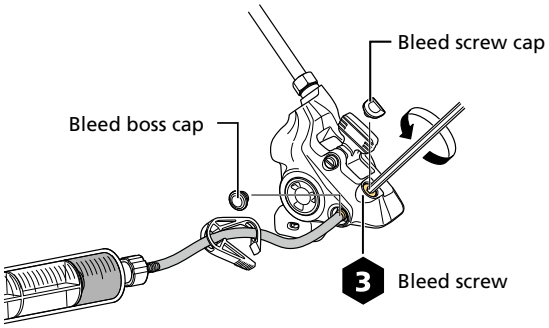


**10. Temporarily close the bleed screw.**

**11. Operate the lever about 10 times.**

**12. Set the lever in a position where the top surface of the oil funnel is 20° to the ground, as shown in the figure.**

Perform adjustment by changing the angle of the handlebar, etc.

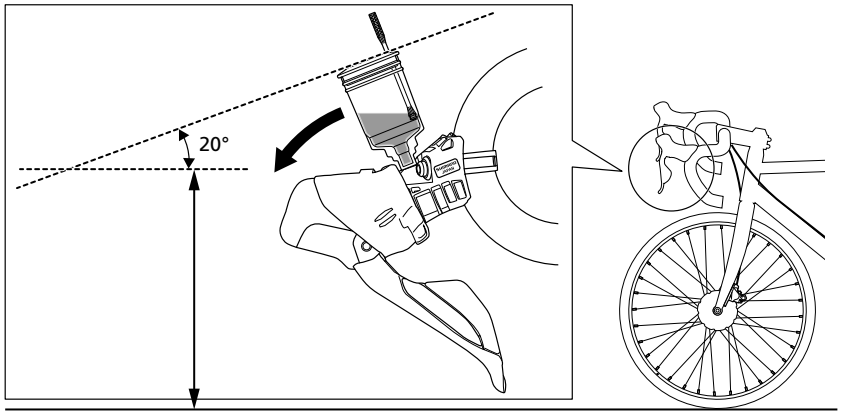


**13. Operate the lever.**

Air bubbles in the system rise up through the port into the oil funnel. Slowly repeat until no more air bubbles appear.

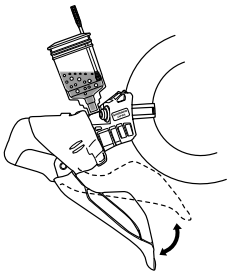

**14. Add the oil through the bleed boss.**

(1) Loosen the bleed screw by 1/2 of a turn.

(2) Push the piston of the syringe to add the oil.

(3) Continue adding oil until there are no more air bubbles in the oil that is coming out.

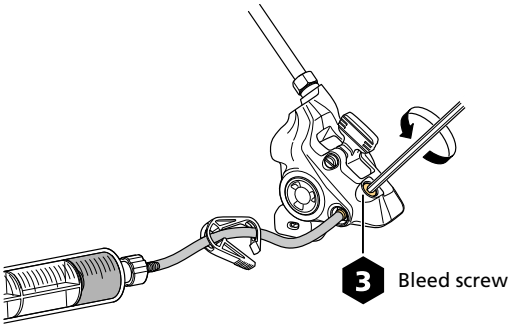


**15. Temporarily close the bleed screw.**

**16. Depress the brake lever a few times and make sure that the lever becomes stiff.**

If the lever does not become stiff, repeat the procedures from step 14 .

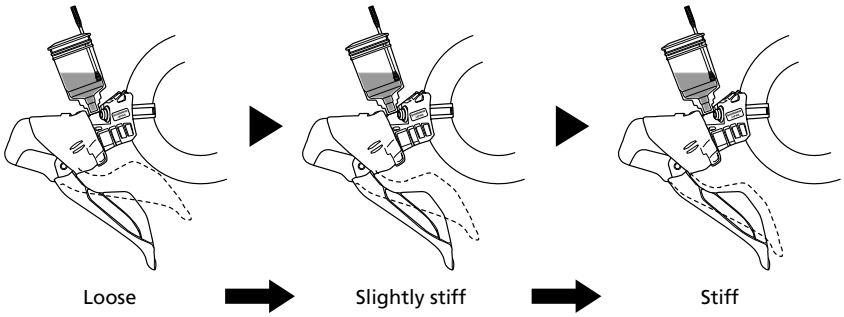


**17. Set the lever in a position where the top surface of the oil funnel is parallel to the ground.**

Perform adjustment by changing the angle of the handlebar, etc.

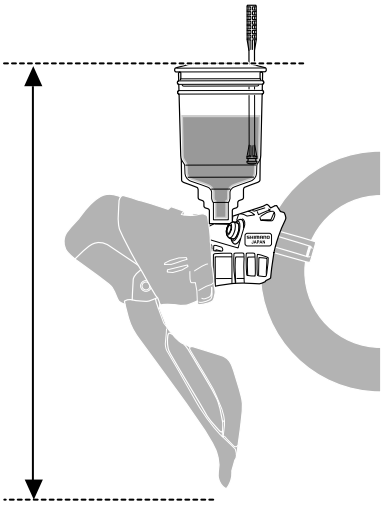

**18. Remove the syringe.**

Cover the end of the syringe tube with a clean rag to prevent spilling any oil.

**19. Bleed the remaining air.**

Most of the air bubbles remaining inside the brake system can be bled by performing the following operation:

(1) After attaching a bag to the tube, connect the tube to the bleed boss.

(2) Loosen the bleed screw.

(3) After a little while, the oil and air bubbles will flow naturally from the bleed boss into the tube.

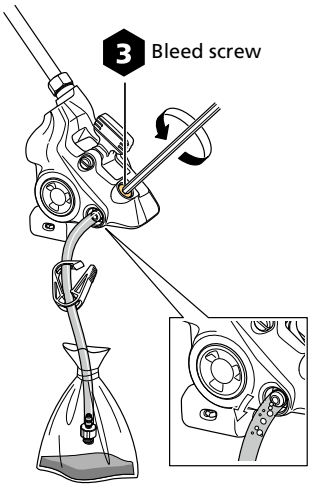


## TECH TIPS

- It may be effective to shake the brake hose gently, to tap the lever bracket or caliper gently with a non-marring screwdriver handle, or to move the position of the calipers.

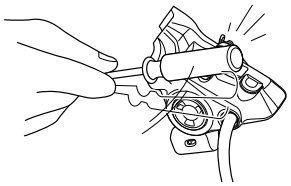

**20. As the oil level drops in the oil funnel, add oil to maintain the oil level and prevent air from getting into the system.**

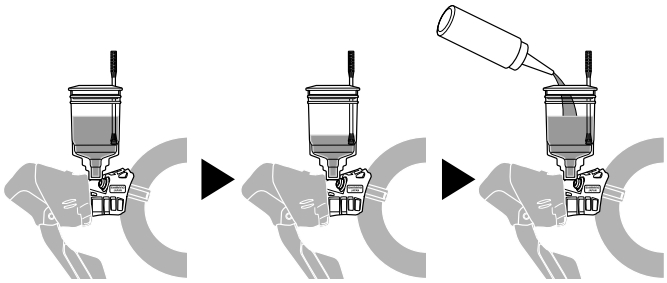

**21. Once no more air bubbles come out from the bleed boss, tighten the bleed screw.**

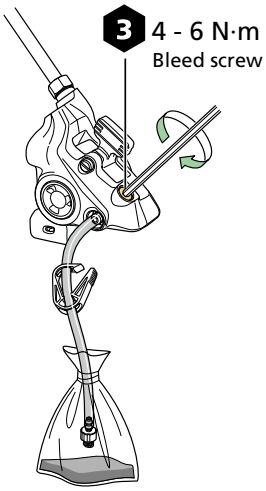

**22. Remove the tube and wipe clean the oil remaining in the bleed boss.**

Cover the end of the syringe tube with a clean rag to prevent spilling any oil.

**23. Install the bleed boss cap.**

**24. Plug the oil funnel with the oil stopper.**

Make sure that the side of the oil stopper with the O-ring attached is facing downward.

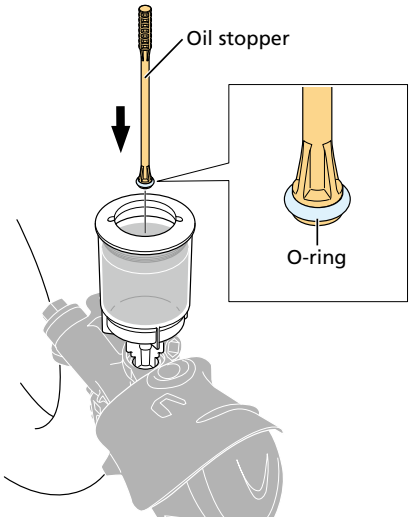


**25. Remove the oil funnel with the oil stopper still in place.**

Cover the bleed port with a clean rag when removing the funnel to absorb any excess oil that may drip out.

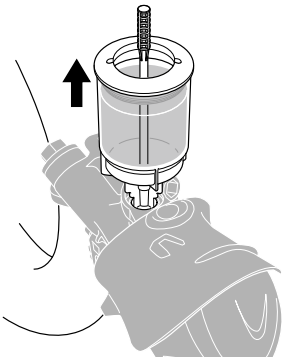

**26. Tighten a bleed screw with O-ring.**

Ensure the reservoir tank is full enough that oil flows out when tightening the bleed screw.

Do not operate the lever until the bleed screw is installed. If operated, there is a risk of air bubbles entering the cylinder.

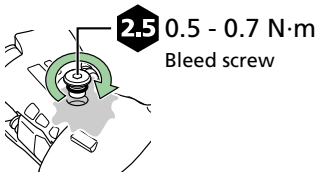


**27. Wipe away any oil that has overflowed.**

Use isopropyl alcohol to clean any oil that has overflowed.

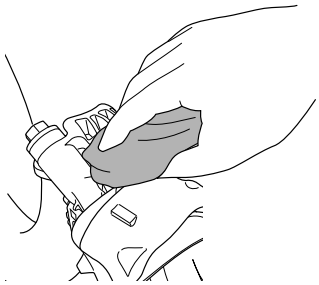

# Caliper piston maintenance

The caliper includes two pistons. Adjust the pistons with the following procedure if these pistons do not operate properly, if they protrude unevenly, or if the brake pads remain in contact with the disc brake rotor.

1. **Remove the wheel from the frame.**
2. **Remove the brake pads from the caliper.**

   Remove the retaining clip, then remove the pad axle.

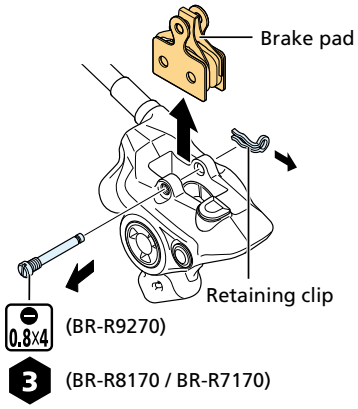


3. **Clean the pistons and the surrounding area.**
4. **Push the pistons straight back as far as they will go.**

   Use a flat-shaped tool to push the pistons back while being careful not to twist them.

   Do not push the pistons with a sharp tool. Doing so may damage the pistons.

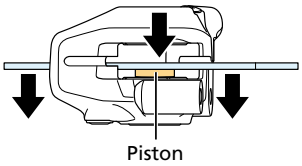


5. **Install the brake pads and pad spacer (orange) in the caliper.**
6. **Depress the lever a few times and make sure pistons protrude evenly.**

   If the pistons do not protrude evenly, repeat steps 2 to 6 .
7. **Remove the pad spacer and install the wheel.**
8. **Check that the disc brake rotor does not interfere with the brake pads.**

   If there is interference, loosen the fixing screw and adjust until there is no more interference.

# Replacing the bracket cover

1. **Remove the brake hose and electric wire from the dual control levers.**

   Be careful so that oil does not spill from the dual control levers or removed brake hose.

2. **Remove the dual control levers from the handlebar.**

3. **Remove the bracket cover.**

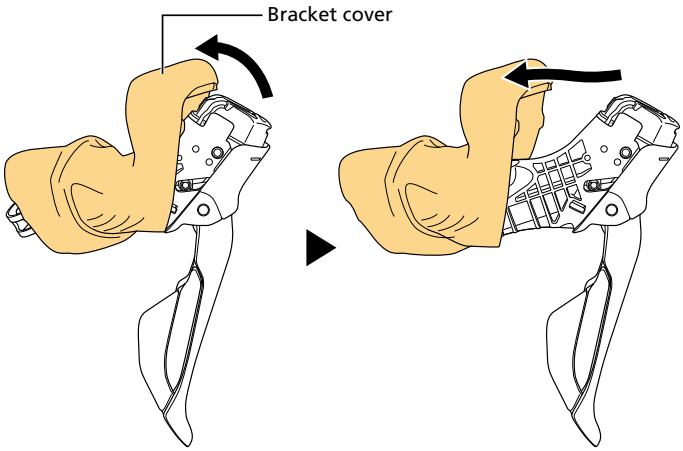


4. **Install a new bracket cover.**

   Insert the protrusions on the bracket cover into the recesses in the bracket body when fitting on the bracket cover.

   The inside of the bracket cover has a marking indicating the left side or right side.

**TECH TIPS**

- It is easier to perform installation if isopropyl alcohol is applied to the inside of the bracket cover.

5. **Reinstall the dual control levers.**

   (1) Install the dual control levers to the handlebar.

   (2) Install the brake hose and electric wire to the dual control levers.

***NOTICE***

- A new olive and connector insert is required to reinstall the brake hose.
- Make sure to perform the procedure in “ Adding mineral oil and bleeding air .”

# Replacing the coin batteries of the dual control levers

## Before replacing the coin batteries

- The included battery is for test purposes. When the battery level becomes low, replace it with a new battery.
- When replacing the battery or opening/closing the battery holder, move to an area well away from sources of water (such as rivers, lakes, the ocean, or ditches).
- Do not perform this task in locations with a lot of water or mud, such as outdoors during rain or car washing facilities. If not observed, problems with operation may occur.
- Do not perform this task in areas with a lot of sand or dust in the air. If not observed, problems with operation may occur.
- Before replacing the battery, wipe the battery holder and battery case to remove water, dirt, etc. If not observed, problems with operation may occur.
- Use your hands or an insulated tool with a blunt tip to perform this task. Using a conductive tool such as pliers may short the terminals of the coin battery and cause a malfunction.
- Take care of the terminals when removing the coin batteries in order to prevent damage to the coin batteries.
- When performing this task with your hands, clean your hands and remove all water and dirt before performing this task.
- Static electricity can damage electronic components. Discharge static electricity from your body before performing this task.
- Refer to the table for the coin batteries used with the dual control levers.

| | Coin battery model number | Quantity (left/right) |
|---|---|---|
| ST-R9270 / ST-R8170 | CR1632 | 2 (1 left + 1 right) |
| ST-R7170 | CR1632 | 4 (2 left + 2 right) |

- It is recommended that you use new coin batteries.

## Checking the dual control lever battery level

If you hold down two shift switches simultaneously for 0.5 seconds or longer, the LED changes to any of the status shown in the figure depending on the battery level.

| | | |
|---|---|---|
| 11% - 100% | | Yellow-green |
| 1% - 10% | | Red |
| 0% | | Off |

## Replacing the coin batteries

## ST-R9270 / ST-R8170

1. **Turn over the bracket cover from the front side.**

2. **Open the battery holder using a screwdriver, and remove the old coin battery by pushing its tip down.**

   If it is difficult to remove a coin battery, affix tape, etc. to the surface of the coin battery and pull it out.

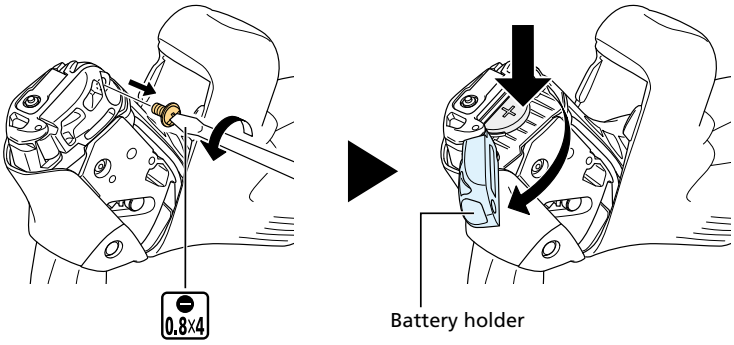


3. **Set a new coin battery (CR1632) in the battery holder.**

   As shown in the figure, set the coin battery with the positive (+) side showing.

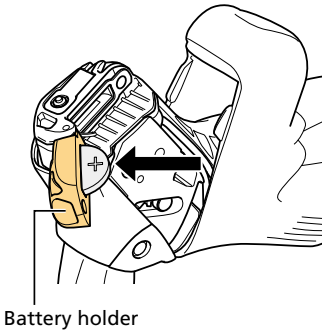


4. **Gently close the battery holder, and firmly secure it with a screwdriver.**

   Be careful not to overtighten the screw, as it may cause damage.

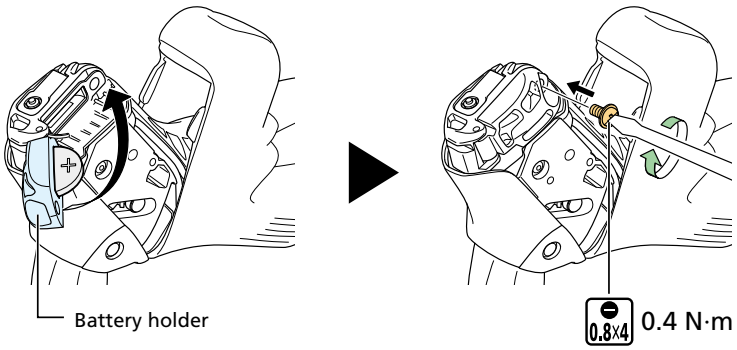


**NOTICE**

- Before closing the battery holder, check that the waterproof sealing gasket and contacting surfaces are free of foreign substances (such as dirt, dust, sand, hair, thread, or liquids).
- If there are foreign substances present, wipe them away with a clean, dry cloth that does not shed lint or fibers.
- Open the battery holder only when replacing the coin batteries, and do not leave it open. Doing so may cause problems with operation due to foreign objects getting inside or deterioration to the electronic component, etc.
- Installing the coin battery with the positive (+) and negative (-) polarities reversed will not only stop the component from operating, it may also cause the component to malfunction. Make sure the coin battery is installed correctly.
- After replacement, check that it works normally.

## ST-R7170

1. **Turn over the bracket cover from the front side.**

2. **Open the battery holder using a screwdriver, and remove the old coin battery by pushing its tip down.**

   If it is difficult to remove a coin battery, affix tape, etc. to the surface of the coin battery and pull it out.

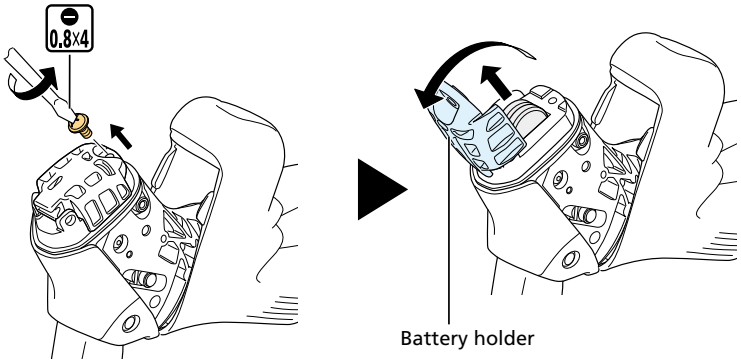


**3. Set the new coin batteries (CR1632) to the battery case.**

As shown in the figure, set the two coin batteries with the positive (+) side on the side of the + mark.

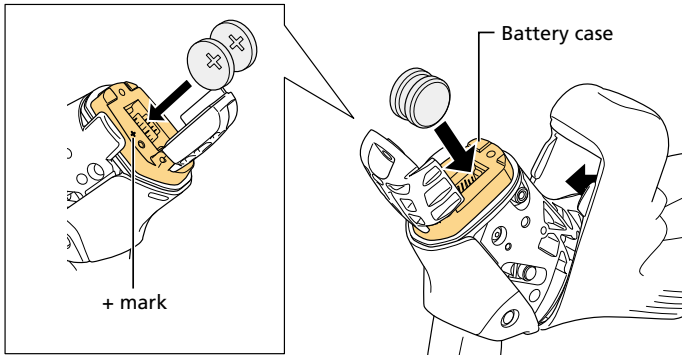


**4. Close the battery holder, and firmly secure it with a screwdriver.**

Be careful not to overtighten the screw, as it may cause damage.

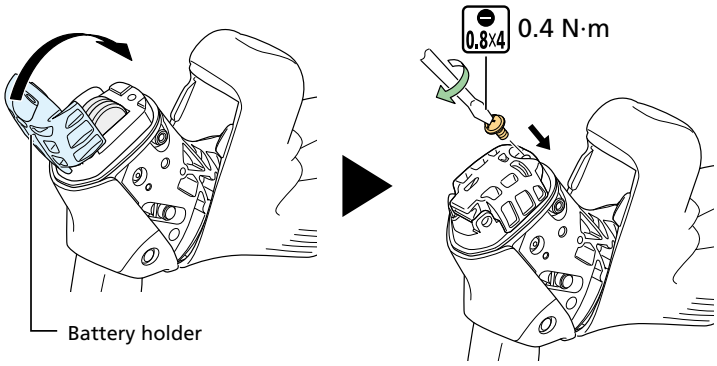


**NOTICE**

- Before closing the battery holder, check that the waterproof sealing gasket and contacting surfaces are free of foreign substances (such as dirt, dust, sand, hair, thread, or liquids).
- If there are foreign substances present, wipe them away with a clean, dry cloth that does not shed lint or fibers.
- Open the battery holder only when replacing the coin batteries, and do not leave it open. Doing so may cause problems with operation due to foreign objects getting inside or deterioration to the electronic component, etc.

- Installing the coin battery with the positive (+) and negative (-) polarities reversed will not only stop the component from operating, it may also cause the component to malfunction. Make sure the coin battery is installed correctly.
- After replacement, check that it works normally.

SHIMANO

**SHIMANO NORTH AMERICA BICYCLE, INC.**
One Holland, Irvine, California 92618, U.S.A. Phone: +1-949-951-5003

**SHIMANO EUROPE B.V.**
High Tech Campus 92, 5656 AG Eindhoven, The Netherlands Phone: +31-402-612222

**SHIMANO INC.**
3-77 Oimatsu-cho, Sakai-ku, Sakai City, Osaka 590-8577, Japan

Please note: specifications are subject to change for improvement without notice. (English)

© Sep. 2024 by SHIMANO INC. ITP