Dealer's Manual

ROAD	MTB	Trekking
City Touring/ Comfort Bike	URBAN SPORT	E-BIKE

SHIMANO

ULTEGRA

R8050 series

(SHIMANO Hydraulic Mineral Oil)

ULTEGRA

SW-R9150
SW-R9160
SW-R610

ST-R8050
ST-R8060
ST-R8070
ST-R8071

FD-R8050
RD-R8050

BR-R8070

SM-EW90-A
SM-EW90-B
EW-RS910

EW-WU111

EW-SD50
EW-SD50-I
EW-JC130

SM-EWC2
SM-JC40
SM-JC41

SM-BTR1
BT-DN110
BT-DN110-A
BM-DN100

SM-BA01
SM-BCR1
SM-BCR2
SM-BCC1

SM-RT800

CONTENTS

IMPORTANT NOTICE 5

TO ENSURE SAFETY 6

LIST OF TOOLS TO BE USED 20

INSTALLATION 22

Electric wire wiring diagram (overall conceptual diagram) 22
Electric wire wiring diagram (junction A side) 25
How to use TL-EW02 (for EW-SD50-I) 38
Conversion adapter 38
How to use TL-EW300 (for EW-SD300-I) 39
Installation of the dual control lever and brake cable 41
Installation of the front derailleur 46
Installation of the rear derailleur 51
Direct mount type 52
Installing the shifting switch 53
Installation of junction A (SM-EW90-A/B) 61
Installation of junction A (EW-RS910) 62
Installation of junction B 67
Points to check before attaching the wireless unit (EW-WU111) 68
Attaching the wireless unit (EW-WU111) 69
Installing the battery 72

INSTALLATION OF HYDRAULIC DISC BRAKE SYSTEM 78

List of tools to be used when installing hydraulic disc brake system 78
Installation of the disc brake rotor 79
Installation of the brake hose 79
Installing the brake hose (ST-R8071) 84
Installation of the brake hose (easy hose joint system) 85
Installation to the handlebar 97
Adding SHIMANO hydraulic mineral oil and bleeding air 98
Installing the brake caliper 107
Temporary tightening of the frame fixing bolts 115

CONNECTION OF ELECTRIC WIRES 117

Connection of junction A 117
Connection of junction B 120
Connecting to the dual control lever 126
Routing junction B and the electric wires inside the frame 129
Assembly of the bottom bracket 130
Installation of grommets 131
Checking connections 132
Disconnection of the electric wires 133

HOW TO OPERATE 136

Gear position control 136

ADJUSTMENT 138

Adjustment of the rear derailleur 138
Installing the chain 143
Adjustment of the front derailleur 144
Adjustment of lever stroke 154
Free stroke adjustment (ST-R8070/ST-R8071) 156

CHARGING THE BATTERY 158
Names of parts 158
Charging method 160
When charging is not possible 162

CONNECTION AND COMMUNICATION WITH DEVICES 165
Settings customizable in E-TUBE PROJECT 165

MAINTENANCE 168
Replacing the bracket cover 168
Disassembly of the bracket body and lever body (ST-R8050) 169
Assembly of the switch unit 170
Assembly of the bracket body and lever body 172
Replacement of the pulley 173
Replacement of the plate and the plate tension spring 174
Replacing the brake pads 176
Replacing SHIMANO hydraulic mineral oil 177
Replacing SHIMANO hydraulic mineral oil (ST-R8071) 178

IMPORTANT NOTICE

- **This dealer's manual is intended primarily for use by professional bicycle mechanics.**
  Users who are not professionally trained for bicycle assembly should not attempt to install the components themselves using the dealer's manuals.
  If any part of the information on the manual is unclear to you, do not proceed with the installation. Instead, contact your place of purchase or a local bicycle dealer for their assistance.
- Make sure to read all instruction manuals included with the product.
- Do not disassemble or modify the product other than as stated in the information contained in this dealer's manual.
- All manuals and technical documents are accessible online at https://si.shimano.com.
- For consumers who do not have easy access to the internet, please contact a SHIMANO distributor or any of the SHIMANO offices to obtain a hardcopy of the User's Manual.
- Please observe the appropriate rules and regulations of the country, state or region in which you conduct your business as a dealer.
- The Bluetooth® word mark and logos are registered trademarks owned by the Bluetooth SIG, Inc. and any use of such marks by SHIMANO INC. is under license.
  Other trademarks and trade names are those of their respective owners.

For safety, be sure to read this dealer's manual thoroughly before use, and follow it for correct use.

The following instructions must be observed at all times in order to prevent personal injury and physical damage to equipment and surroundings.
The instructions are classified according to the degree of danger or damage which may occur if the product is used incorrectly.

DANGER

Failure to follow the instructions will result in death or serious injury.

WARNING

Failure to follow the instructions could result in death or serious injury.

CAUTION

Failure to follow the instructions could cause personal injury or physical damage to equipment and surroundings.

TO ENSURE SAFETY

⚠ DANGER

Be sure to also inform users of the following.

■ Lithium-ion battery

Be sure to observe the following instructions in order to avoid burns or other injury from fluid leakage, overheating, fire, or explosion:

- Use the designated battery charger to charge the battery. If any non-specified items are used, fire, overheating or leakage may occur.
- Do not heat the battery or throw it into a fire. Doing so may cause bursting or ignition.
- Do not deform, modify, disassemble, or apply solder directly to the battery. Do not use or leave the battery in places which may exceed 60°C in temperature, such as places which are exposed to direct sunlight, inside vehicles on hot days or near stoves. If this is not observed, leakages, overheating or bursting may cause fire, burns, or other injuries.
- Do not connect the (+) and (-) terminals with metallic objects. Do not carry or store the battery together with metallic objects such as necklaces or hairpins. If this is not observed, short-circuits, overheating, burns or other injury may occur.
- If any liquid leaking from the battery gets into the eyes, immediately wash the affected area with clean water without rubbing the eyes, then seek medical attention. If this is not done, blindness may occur.

■ Battery charger/battery charger cord

Be sure to observe the following instructions in order to avoid burns or other injury from fluid leakage, overheating, fire, or explosion:

- Do not get the battery charger wet and do not touch or hold it while it is wet or with wet hands. If this is not observed, problems with operation or electric shocks may occur.
- Do not use the battery charger when it is covered with a cloth or other material. If this is not observed, heat may build up and the case may become deformed, or fire, ignition, or overheating may occur.
- Do not disassemble or modify the battery charger. If this is not observed, electric shocks or injury may occur.
- Use the battery charger at the specified power supply voltage only. If a power supply voltage other than that specified is used, fire, destruction, smoke, overheating, electric shocks or burns may occur.
- Do not touch the metallic parts of the device or the power plug on the AC adapter or other parts if there is a lightning storm. If lightning strikes, electric shocks may occur.

■ SM-BCR2: Battery charger for SM-BTR2/BT-DN110/BT-DN110-A

- Use an AC adapter with a USB port with a voltage of 5.0 V DC and with a current equal to or higher than 1.0 A DC. If the one with a current lower than 1.0 A is used, the AC adapter may heat up, potentially causing a fire, smoke, overheating, destruction, electric shock, or burns.

⚠ WARNING

- **Be sure to follow the instructions provided in the manuals when installing the product.**
  Only use SHIMANO genuine parts. If a component or replacement part is incorrectly assembled or adjusted, it can lead to component failure and cause the rider to lose control and crash.
- Wear approved eye protection while performing maintenance tasks such as replacing components.
- This dealer's manual is for use with the ULTEGRA R8050 series (electronic gear shifting system) only.
  For information on products not explained in this manual, search for the model on our website (https://si.shimano.com).
- Store the dealer's manuals after reading so that they can be referenced at any time.

Be sure to also inform users of the following:

- ***Never use alkali-based or acid-based solvents such as rust cleaners. If those solvents are used the chain might break and cause serious injury.***
- ***Clean the chain with an appropriate chain cleaner regularly. Intervals between maintenance depend on the use and riding circumstances.***
- Check that the wheels are fastened securely before riding the bicycle. Using the axle release lever incorrectly may cause the wheel to fall off, etc. and lead to serious injury due to a fall.
- Check the chain for any damage (deformation or cracking), skipping, or other abnormalities such as unintended gear shifting. If any problems are found, consult your place of purchase or a distributor. The chain may break, and you may fall.
- Be careful not to let the hemming of your clothes get caught in the chain while riding. Otherwise, you may fall off the bicycle.

■ Lithium-ion battery

- Do not place the battery into fresh water or sea water, and do not allow the battery terminals to get wet. Doing otherwise may cause it to overheat, burst, or ignite.
- Do not use the battery if it has any noticeable scratches or other external damage. If this is not observed, bursting, overheating or problems with operation may occur.
- Do not throw or subject the battery to strong shock. Doing otherwise may cause it to overheat, burst, or ignite.
- Do not use the battery if leakages, discoloration, deformation or any other abnormalities occur. If this is not observed, bursting, overheating or problems with operation may occur.
- If any leaked fluid gets on your skin or clothes, wash it off immediately with clean water. The leaked fluid may damage your skin.
- Do not use the battery outside its operating temperature ranges. If the battery is used or stored in temperatures which are outside these ranges, fire, injury or problems with operation may occur. The operating temperature ranges are given below:
  1. During discharge: -10°C - 50°C
  2. During charging: 0°C - 45°C

SM-BTR1: Lithium-ion battery (external type)

- If charging is not complete after 1.5 hours, stop charging. If this is not observed, fire, bursting, ignition, or overheating may occur.

SM-BTR2/BT-DN110/BT-DN110-A: Lithium-ion battery (built-in type)

- If the battery does not become fully charged after 4 hours of charging, stop charging. If this is not observed, fire, bursting, ignition, or overheating may occur.

■ Battery charger/battery charger cord

SM-BCR1: Battery charger for SM-BTR1

- Hold the power plug when connecting or disconnecting from the electrical outlet. Failure to do so may cause a fire or electric shock.
- If the following symptoms are observed, stop using the device and contact your place of purchase. A fire or electric shock may be caused.
  * If heat, acrid-smell, or smoke is coming out from the power plug.
  * There may be a bad connection inside the power plug.
- Do not overload the electrical outlet with appliances beyond its rated capacity, and use only a 100 V - 240 V AC electrical outlet. If the electrical outlet is overloaded by connecting too many appliances using adapters, overheating resulting in fire may occur.
- Do not damage the power cord or power plug. (Do not damage, modify, forcibly bend, twist or pull it, put it near hot objects, place heavy objects on it or bundle it tightly together.) If it is used while damaged, fire, electric shocks or short-circuits may occur.
- Do not use the battery charger with commercially-available electrical transformers designed for overseas use (travel converters). They may damage the battery charger.
- Always be sure to insert the power plug as far as it will go. If this is not observed, fire may occur.

SM-BCR2: Battery charger for SM-BTR2/BT-DN110/BT-DN110-A

- Do not use any USB cable other than the USB cable which is supplied with the PC linkage device. This may cause a charging error, fire, or failure to connect to PC due to overheating.
- Do not connect the battery charger to PC when it is on standby. This may cause a PC failure depending on its specifications.
- When connecting or disconnecting the USB cable or the charging cable, be sure to hold the cable by the plug. Failure to do so may cause a fire or electric shock. If the following symptoms are observed, stop using the device and contact your place of purchase. A fire or electric shock may be caused.
  * If heat, acrid-smell, or smoke is coming out from the power plug.
  * There may be a bad connection inside the power plug.
- If it thunders while charging with an AC adapter with a USB port, do not touch the device, bicycle, or the AC adapter. If lightning strikes, electric shocks may occur.
- Use an AC adapter with a USB port that has a voltage of 5.0Vdc and a current equal to or higher than 1.0Adc. If the one with a current lower than 1.0Adc is used, a charge error may occur or the AC adapter may heat up, leading to a fire.
- Do not use a USB hub when connecting the cable to a computer USB port. This may cause a charging error or fire due to overheating.
- Be careful not to damage the charging cable. Do not damage, process, forcibly bend, twist or pull them, bring them near hot objects, place heavy objects on them or bundle them tightly together. If they are used while damaged, fire, electric shocks or short-circuits may occur.

■ Brake

- Because each bicycle may handle slightly differently depending on the model, be sure to learn the proper braking technique (including brake lever pressure and bicycle control characteristics) and operation of your bicycle. Improper use of your bicycle's brake system may result in a loss of control, which could lead to serious injury due to a fall or collision.
- Do not apply the front brake too strongly. If you do so, the front wheel may lock and the bicycle may fall forward, and serious injury may result.
- Because the required braking distance will be longer during wet weather, reduce your speed and apply the brakes early and gently. You may fall or collide and be seriously injured.
- A wet road surface may cause tires to lose traction; therefore, to avoid this, reduce your speed and apply the brakes early and gently. If the tires lose traction, you may fall and be seriously injured.

■ Hydraulic disc brake

- Please use extra caution to keep your fingers away from the rotating disc brake rotor. The disc brake rotor is sharp enough to inflict severe injury to your fingers if caught within the openings of moving rotor.

- Do not touch the calipers or disc brake rotor while riding or immediately after dismounting from the bicycle. The calipers and disc brake rotor will become hot when the brakes are operated, so you may get burned if you touch them.
- Do not allow any oil or grease to get onto the disc brake rotor and brake pads. Riding the bicycle with oil or grease on the disc brake rotor and brake pads may prevent the brakes from operating and result in serious injury due to a fall or collision.
- Check the thickness of the brake pads and do not use them if they have a thickness of 0.5 mm or less. Doing so may prevent the brakes from operating and result in serious injury due to a fall or collision.

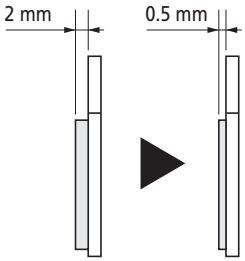

- Do not use the disc brake rotor if it is cracked or deformed. The disc brake rotor may break, and result in serious injury due to a fall.
- Do not use the disc brake rotor if its thickness is 1.5 mm or less. Also do not use it if the aluminum surface becomes visible. The disc brake rotor may break, and result in serious injury due to a fall.
- Do not continuously apply the brakes. Doing so may cause a sudden increase in the brake lever stroke, preventing the brakes from operating and resulting in serious injury due to a fall or collision.
- Do not use the brakes with fluid leaking. Doing so may prevent the brakes from operating and result in serious injury due to a fall or collision.

For installation to the bicycle and maintenance

- When operating the shift switch, be careful not to allow your fingers to be caught in the derailleur. The motor in the derailleur is powerful enough to be operated without stopping until the shifting position is reached, and may cause serious injury if your fingers interfere with the shifting motion.

■ Hydraulic disc brake

- Please make sure to keep your fingers away from the rotating disc brake rotor during installation or maintenance of the wheel.
  The disc brake rotor is sharp enough to inflict severe injury to your fingers if caught within the openings of moving disc brake rotor.

- Do not use the disc brake rotor if it is cracked or warped. The disc brake rotor may break, and result in serious injury due to a fall.
- Do not use the disc brake rotor if its thickness is 1.5 mm or less. Also do not use it if the aluminum surface becomes visible. The disc brake rotor may break, and result in serious injury due to a fall.
- The calipers and disc brake rotor will become hot when the brakes are operated; do not touch them while riding or immediately after dismounting from the bicycle. Otherwise, you may get burned.
- Check the information on the supported models for each oil type (https://si.shimano.com/dm/BROIL), and use the correct oil for the product. Doing otherwise may prevent the brakes from operating and result in serious injury.
- Do not mix SHIMANO hydraulic mineral oil with SHIMANO low viscosity oil. Doing so may prevent the brakes from operating and result in serious injury.
- Be sure to use only oil from a freshly-opened container. Doing so may prevent the brakes from operating and result in serious injury due to a fall or collision.
- Do not let water or air bubbles get into the brake system. Doing so may prevent the brakes from operating and result in serious injury due to a fall or collision.
- If the quick release lever is on the same side as the disc brake rotor, confirm that it does not interfere with the disc brake rotor. Otherwise, the bicycle may fall forward, and serious injury may result.
- Do not use with a tandem bicycle. Doing so may prevent the brakes from operating and result in serious injury due to a fall or collision.
- When installing the brake caliper using bolt fixing pins, be sure to use mounting bolts of the appropriate length.
  If not, the bolt fixing pins may not be securely fastened, and the bolts may fall out.

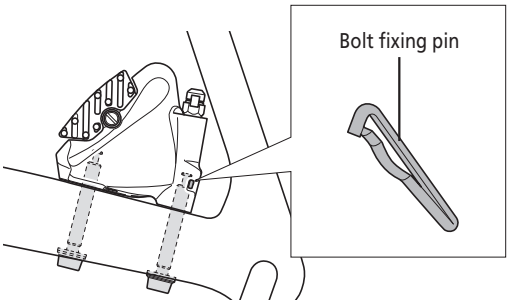

■Brake hose

- The connector insert is for this brake hose only. Use an appropriate connector insert according to the following table. Use of a connector insert incompatible with the brake hose may cause fluid leaks.

Model No.	Length	Color
SM-BH90-JK-SSR	11.2 mm	Silver

- Do not reuse the olive piece or the connector insert when reinstalling. Doing so may prevent the brakes from operating and result in serious injury due to a fall.

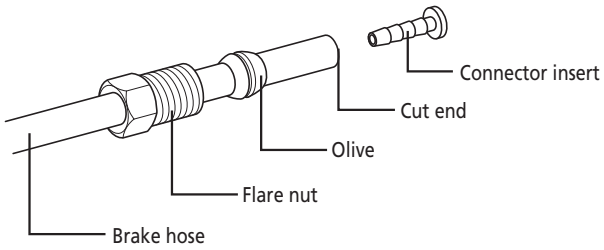

- Cut the brake hose so that the cut end is perpendicular to the length of the hose. If the brake hose is cut at an angle, fluid leaks may result.

■Points to note about the handlebars

ST-R8060/SW-R9160

- Handle inner diameter: Ø19.0 - 22.5 mm
- Handle outer diameter: Ø22.2 - 24.0 mm
- Applicable handlebars: Carbon handlebars (with aluminum inserts where the brake levers are installed) or aluminum handlebars.
  * Carbon handlebars without aluminum inserts, where the brake levers are installed, cannot be used.

EW-RS910 (Built-in bar end type)

- Handle inner diameter: Ø20.5 - 21.5 mm
- Handle outer diameter: Ø23.8 - 24.2 mm

⚠ CAUTION

Be sure to also inform users of the following.

■ Lithium-ion battery

- Store the product in a safe place out of the reach of infants and pets.

SM-BTR1: Lithium-ion battery (external type)

- When you do not use the battery for a long period, remove and charge the battery before storage.

SM-BTR2/BT-DN110/BT-DN110-A: Lithium-ion battery (built-in type)

- When you do not use the battery for a long period, charge the battery before storage.

■ Battery charger/battery charger cord

SM-BCR1: Battery charger for SM-BTR1

- Disconnect the power plug from the electrical outlet when performing maintenance.

SM-BCR2: Battery charger for SM-BTR2/BT-DN110/BT-DN110-A

- Disconnect the USB cable or the charging cable when performing maintenance.

■ Hydraulic disc brake

Cautions on SHIMANO hydraulic mineral oil

- Use appropriate eye protection when handling SHIMANO hydraulic mineral oil, and avoid contact with eyes. In the event of eye contact, flush with fresh water and seek medical assistance immediately. Contact with eyes may result in irritation.
- Wear gloves when handling SHIMANO hydraulic mineral oil. In the event of skin contact, wash well with soapy water. Contact with skin may cause a rash and discomfort.
- When using SHIMANO hydraulic mineral oil, cover your nose and mouth with a respirator type mask and ensure that the area is well-ventilated. Inhalation of oil mist or vapors emitted from SHIMANO hydraulic mineral oil may cause nausea.
- If oil mist or vapor emitted from SHIMANO hydraulic mineral oil is inhaled, go immediately to an area with fresh air. Cover up with a blanket. Stay warm and stable and seek professional medical advice.

Bed-in period

- Disc brakes have a bed-in period, and the braking force will gradually increase as the bed-in period progresses. Accidents or falls may occur due to losing control of the bicycle, possibly resulting in serious injury.
  (The same thing will happen when the brake pads or disc brake rotor are replaced.)

For installation to the bicycle and maintenance

■ Hydraulic disc brake

Handling SHIMANO hydraulic mineral oil

- Do not drink. May cause vomiting or diarrhea.
- Keep out of reach of children.
- Do not cut, let near heat, weld or pressurize the SHIMANO hydraulic mineral oil container. Doing so may cause an explosion or fire.
- Disposal of used oil: Follow local county and/or state codes for disposal. Use caution when preparing the oil for disposal.
- Directions: Keep the container sealed to prevent foreign objects and moisture from getting inside, and store it in a cool, dark area away from direct sunlight or heat. Keep from heat or flame
- For cleaning brake hoses exposed to SHIMANO hydraulic mineral oil, or cleaning and maintaining tools, use isopropyl alcohol or a dry cloth. Do not use commercially available brake cleaners. Doing so may cause damage to plastic parts.

When cleaning with a compressor

- If disassembling the caliper body to clean the internal parts using a compressor, note that moisture from the compressed air may remain on the caliper components. Let the caliper components dry sufficiently before reassembling the calipers.

Brake hose

- When cutting the brake hose, handle the knife carefully so as not to cause injury.
- Be careful to avoid injury from the olive.

NOTICE

Be sure to also inform users of the following:

- Be sure to rotate the crank while performing all switch operations related to gear shifting.
- The connectors are small and waterproof, so do not connect and disconnect electric wires except when necessary. Doing so may impair the waterproofing.
- Be careful not to get water into the E-TUBE ports.
- The components are designed to be fully waterproofed to withstand wet weather riding conditions; however, do not deliberately place them into water.
- Do not clean the bicycle with a high-pressure washer. If water gets into any of the components, operating problems or rusting may result.
- Be sure to keep turning the crank during gear shifting operations.
- Handle the components carefully, and avoid subjecting them to strong shock.
- Do not use the thinners or harsh solvents to clean the products. Such solvents may damage the surface.
- If gear shifting operation does not feel smooth, consult the place of purchase for assistance.
- Keep away from magnetic objects. If this is not observed, problems with operation may occur.
  When installing a product that uses a magnet, make sure the magnet is set in the specified location before installing the product.
- Contact the place of purchase for updates of the component firmware. The most up-to-date information is available on the SHIMANO website.
- Products are not guaranteed against natural wear and deterioration from normal use and aging.
- For maximum performance we highly recommend Shimano lubricants and maintenance products.

■Lithium-ion battery

- Lithium-ion batteries are recyclable, valuable resources.
  For information on used batteries, contact the place of purchase or a distributor.
- Charging can be carried out at any time regardless of the battery level. Always be sure to use the special battery charger to charge the battery until it is fully recharged.
- The battery is not fully charged at the time of purchase. Before riding, be sure to fully charge the battery.
- When the battery is completely depleted, charge it as soon as possible. If you leave the battery without charging it, it will cause the battery to deteriorate.
- The battery is an exhaustible item. The battery will gradually lose its capacity to charging after repeated use.
  If the length of time that the battery can be used becomes extremely short, it has probably reached the end of its life, and so you will need to purchase a new battery.
- The life of the battery will vary depending on factors such as the storage method, the usage conditions, the surrounding environment and the characteristics of the individual battery pack.
- If storing the battery away for a long period, remove it when the battery level is 50% or higher or when the green indicator is illuminating in order to prolong its useful life; and it is recommended that you charge the battery approximately every six months.
- If the storage temperature is high, the performance of the battery is reduced, and its useable time will be shorter. When you use the battery after a long storage period, store the battery indoors where the battery will not be exposed to direct sunlight or rain.
- If the ambient temperature is low, the battery's usable time will be shorter.

SM-BTR1: Lithium-ion battery (external type)

- When storing the battery away, remove the battery from the bicycle and install the terminal cover first.
- The charging time is approximately 1.5 hours. (Note that the actual time will vary depending on the remaining battery charge.)
- If the battery feels difficult to insert or remove, apply specified grease (Premium Grease) to the part that touches the O-ring at the side.

SM-BTR2/BT-DN110/BT-DN110-A: Lithium-ion battery (built-in type)

- After removing the battery from the bicycle for storage, install a dummy plug.

- The charging time of an AC adapter with a USB port is approximately 1.5 hours, and that of computer USB port type approximately 3 hours. (Note that the actual time will vary depending on the amount of charge remaining in the battery. Depending on the specifications of the AC adapter, recharging via the AC adapter may require as much time (approximately 3 hours) as recharging via PC.)

■Battery charger/battery charger cord

- Use this instrument under the direction of a safety supervisor or the direction for use. Do not allow anyone (including children) with reduced physical, sensual, or mental capacity, or those without experience or knowledge, to use the product.
- Do not allow children to play near the product.

Disposal information for countries outside the European Union

This symbol is only valid within the European Union.
Contact the place of purchase or a distributor for advice on disposing.

- Charge the battery indoors to avoid exposure to rain or wind.
- Do not use outdoors or in environments with high humidity.
- Do not place the battery charger on dusty floors when using it.
- Place the battery charger on a stable surface such as a table when using it.
- Do not place any objects on top of the battery charger or its cable.
- Do not bundle the cables.
- Do not hold the battery charger by the cables when carrying it.
- Do not apply excessive tension to the cables.
- Do not wash the battery charger or wipe it using detergents.

SM-BCR2: Battery charger/PC linkage device for SM-BTR2/BT-DN110/BT-DN110-A

- Connect the PC linkage device directly to the USB port on a PC, without using an intermediate device such as a USB hub.
- Do not ride the bicycle while the PC linkage device and cable are still connected to it.
- Do not connect two or more of the same units to the same connection point. If this is not done, the units may not operate correctly.
- Do not connect or disconnect units again while unit recognition is in progress or after recognition is complete. If this is not done, the units may not operate correctly.
  Check the procedures which are given in the user's manual for the E-TUBE PROJECT when connecting and disconnecting units.
- The tightness of the PC link cable will tend to drop after repeated connections and disconnections. If this happens, replace the cable.
- Do not connect two or more PC linkage devices at the same time. If two or more PC linkage device units are connected, they will not operate correctly. In addition, the PC may need to be restarted if operating errors occur.
- PC linkage devices cannot be used while the battery charger is connected.

■Rear derailleur

- If gear shifting operation does not feel smooth, consult the place of purchase for assistance.
- If you feel the chain or other drivetrain components skipping, consult the place of purchase for assistance.
- If the pulleys of the derailleur develop excess play or noise, consult the place of purchase for assistance.
- The gears should be periodically washed with a neutral detergent. In addition, cleaning the chain with neutral detergent and lubricating it can be an effective way of extending the life of the gears and the chain.
- If excess play in the links is so great that gear shifting adjustments cannot be made, replace the shifting unit.

■Hydraulic disc brake

- When the bicycle wheel has been removed, it is recommended that pad spacers are installed. Do not depress the brake lever while the wheel is removed. If the brake lever is depressed without the pad spacers installed, the pistons will protrude further than normal. If that happens, consult a place of purchase.
- Use soapy water and a dry cloth when cleaning and carrying out maintenance of the brake system. Do not use commercially available brake cleaners or silencing agents, as they can cause damage to parts such as the seals.

■Dual control lever

- ST-R8071 does not use coin batteries. Do not open the holder or insert a coin battery into the holder.

■Wireless unit

- If using EW-WU111, use it together as a set with one of the following units.
  External type: BM-DN100, built-in type: BT-DN110/BT-DN110-A
- The connectors are small and waterproof, so do not connect and disconnect electric wires except when necessary. Doing so may impair the waterproofing.
- Be careful not to get water into the E-TUBE ports.
- The components are designed to be fully waterproofed to withstand wet weather riding conditions; however, do not deliberately place them into water.
- Do not clean the bicycle with a high-pressure washer. If water gets into any of the components, operating problems or rusting may result.
- Handle the components carefully, and avoid subjecting them to strong shock.
- As shown in the figure, install the product so that it does not reach the side of the bicycle body.
  Otherwise, it could be damaged if the bicycle tips over and it is pinched between the frame and curb.

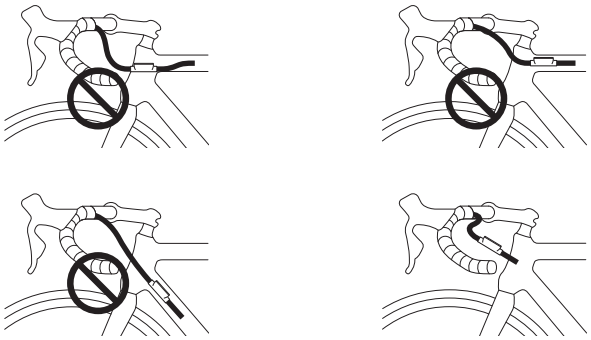

- Do not use the thinners or harsh solvents to clean the products. Such solvents may damage the surface.
- Do not leave the product in an area exposed to strong sunlight for an extended period of time.
- Do not disassemble the product as it cannot be reassembled.
- When cleaning the product, use a cloth moistened with a diluted neutral detergent.
- Contact the place of purchase for updates of the component firmware. The most up-to-date information is available on the SHIMANO website.

For installation to the bicycle and maintenance

- Be sure to attach dummy plugs to any unused E-TUBE ports.
- Always be sure to use the TL-EW02 to remove the electric wires.
- The motor unit cannot be disassembled and repaired.
- Contact SHIMANO INC. for information regarding the shipment of the battery charger to South Korea and Malaysia.
- Use a brake hose/outer casing which still has some length to spare even when the handles are turned all the way to either side. Furthermore, check that the shift lever does not touch the bicycle frame when the handles are turned all the way.
- Use the specified cable and cable guide for smooth operation.
- The clamp band, clamp screw and clamp nut are not compatible with other products. Be sure to always use the clamp band, clamp screw and clamp nut which is specific to each product.

■Electric wires/electric wire covers

- Secure the electric wires with a zip tie so that they do not interfere with the chainrings, sprockets or tires.
- The strength of the adhesive is fairly weak to prevent the paint on the frame from being peeled off when removing the electric wire cover, such as when replacing the electric wires. If the electric wire cover is peeled off, replace it with a new one. When removing the electric wire cover, do not peel it off too vigorously. If so, the paint on the frame will peel off, too.
- Do not remove the wire holders which are attached to the built-in type electric wires (EW-SD50-I). The wire holders prevent the electric wires from moving inside the frame.
- When installing to the bicycle, do not forcibly bend the electric wire plug. It may result in a poor contact.

■Rear derailleur

- Be sure to adjust the high limit screw and the low limit screw according to the instructions given in the adjustment section.
  If these are not adjusted, the chain may become clamped between the spokes and the largest sprocket and the wheel may lock, or the chain may slip onto the small sprocket.
- Periodically clean the shifting unit and lubricate all moving parts (mechanism and pulleys).
- If gear shifting adjustments cannot be carried out, check the degree of parallelism of the dropout.
- The guide pulley and tension pulley have an arrow on one side to indicate the direction of rotation. When installing the pulleys, install so that the surfaces with arrows are on the inner side when looking from the outer side of the shifting unit.

■Hydraulic disc brake

- If the brake caliper mounting boss and the dropout are not of standard dimensions, the disc brake rotor and caliper may touch.
- When the bicycle wheel has been removed, it is recommended that pad spacers are installed. The pad spacers will prevent the piston from coming out if the brake lever is depressed while the wheel is removed.
- If the brake lever is depressed without the pad spacers installed, the pistons will protrude further than normal. Use a slotted screwdriver or other tool to push open the brake pads, while being careful not to damage the surfaces of the brake pads. (If the brake pads are not installed, use a flat-shaped tool to push the pistons straight back in, while being careful not to damage them.)
  If it is difficult to push the brake pads or pistons back, remove the bleed screws then try again. (Note that some oil may overflow from the reservoir tank at this time.)
- Use isopropyl alcohol, soapy water or a dry cloth when cleaning and carrying out maintenance of the brake system. Do not use commercially available brake cleaners or silencing agents. Such substances can cause damage to parts such as seals.
- Do not remove the pistons when cleaning the calipers.
- If the disc brake rotor is worn, cracked or warped, it should be replaced.

■Dual control lever

- Dummy plugs are installed at the time of shipment from the factory. Do not remove them except when necessary.
- When routing the electric wires, take care to ensure that they do not interfere with the brake levers.

The actual product may differ from the illustration because this manual is intended mainly to explain the procedures for using the product.

For installation to the bicycle

■Notes on reinstalling and replacing components

- When the product is reinstalled or replaced, it is automatically recognized by the system to allow operation according to the settings.
- If the system does not operate after reassembly and replacement, follow the system power reset procedure below to check the operation.
- If the component configuration changes or malfunction is observed, use E-TUBE PROJECT to update the firmware of each component to the latest version and perform a check again. Also, make sure that E-TUBE PROJECT is the latest version. If the software is not the latest version, the component compatibility or the product functions may not be available.

Be sure to also inform users of the following:

■About used batteries

- Lithium-ion batteries are recyclable, valuable resources.
  For information on used batteries, contact the place of purchase or a distributor.

■About system power reset

- When the system fails to operate, it may be recovered by resetting the system power.
- After the battery is removed, approximately one minute is usually required for the system power to reset.

In the case of using SM-BTR1

- Remove the battery from the battery mount. After approximately one minute, install the battery.

If using SM-BTR2/BT-DN110/BT-DN110-A

- Disconnect the plug from SM-BTR2/BT-DN110/BT-DN110-A. After approximately one minute, insert the plug.

■Connection and communication with a PC

- PC linkage devices (SM-PCE02) can be used to connect a PC to the bicycle (system or components), and E-TUBE PROJECT Professional can be used to carry out tasks such as customizing single components or the whole system and updating their firmware.
  If your version of E-TUBE PROJECT Professional and the firmware for each component are not up to date, there could be problems operating the bicycle. Check the application versions and update them to the latest ones.

■Connection and communication with a smartphone

- The smartphone version of E-TUBE PROJECT Cyclist can be used to carry out tasks such as customizing single components or the whole system and updating their firmware, after connecting the bicycle (system or components) to a smartphone via Bluetooth® LE.
- Disconnect the Bluetooth® LE connection when not using the smartphone version of E-TUBE PROJECT Cyclist.
  Using a wireless unit without disconnecting the Bluetooth® LE connection could increase battery consumption.

About compatibility with E-TUBE

- Check the following website for information on compatibility with each unit and functional limitations.
  (https://bike.shimano.com/e-tube/project/compatibility.html#guide_list)

■About the multi shift function

- On this system, the multi shift function can be configured using E-TUBE PROJECT. The gears will continue to shift when the shift switch is pressed using the multi shift function. Shifting speed setting for multi-shifting can also be modified. When modifying the gear changing settings for multi-shifting, carefully read "**Settings customizable in E-TUBE PROJECT**" in this dealer's manual.
- If a high multi-shift speed is set in combination when the crank rotation speed is low, the chain will be unable to follow the movement of the rear derailleur, possibly leading to issues such as the chain slipping over the tip of the cassette sprocket teeth, the cassette sprocket deforming, or the chain breaking.

Item	Multi-shift speed	Characteristics	Usage notes	Crank rotation speed when operating multi-shifting
Very fast	High speed	Quick multi-shifting is possible • The crank rotation speed can be adjusted quickly depending on changes in riding conditions. • The speed can be adjusted quickly.	• Over-shifting occurs easily. • If the rotation speed of the crank is low, the chain will be unable to follow the movement of the rear derailleur. The chain may therefore slip over the tip of the cassette sprocket teeth.	High crank rotation speed
Fast				
Normal	Default setting			
Slow				
Very slow	Low speed	Accurate multi-shifting is possible	Multi-shifting takes some time	

By default it is set to **Normal**.
Fully understand the features of the multi-shift speed, and choose a multi-shift speed setting according to the riding conditions (terrain, riding method, etc.).

LIST OF TOOLS TO BE USED

LIST OF TOOLS TO BE USED

The following tools are needed for installation, adjustment, and maintenance purposes.

Tool		Tool		Tool	
2 mm	2 mm hexagon wrench	0.8×4	Slotted screwdriver (nominal dia. 0.8 × 4)		Utility knife
2.5 mm	2.5 mm hexagon wrench	#5	Hexalobular[#5]		Handlebar tape cutout tool
3 mm	3 mm hexagon wrench	#10	Hexalobular[#10]	TL-CT12	TL–CT12
4 mm	4 mm hexagon wrench		Snap ring pliers	TL-EW02	TL-EW02
5 mm	5 mm hexagon wrench		Special snap ring removal tool	TL-EW300	TL-EW300
23mm	23 mm hub spanner		Soft face mallet		Micrometer
#2	Screwdriver[#2]				

INSTALLATION

INSTALLATION

■ Electric wire wiring diagram (overall conceptual diagram)

Lithium ion battery (external type) SM-BTR1

External type (SM-JC40)

SM-EW90-A/B

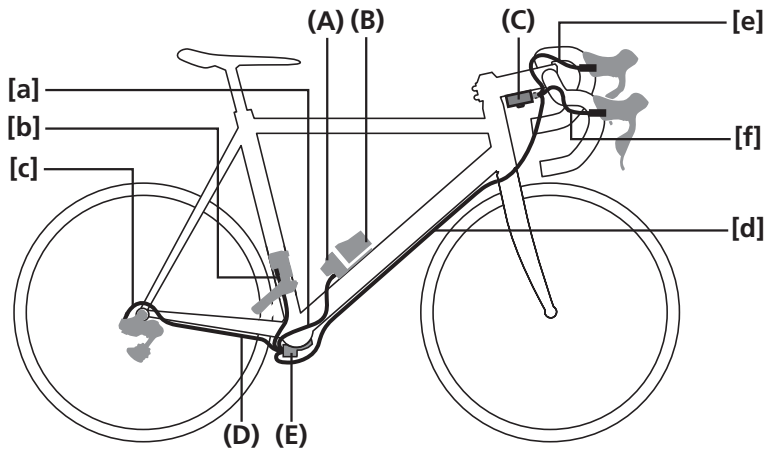

EW-RS910

Built-in bar end type

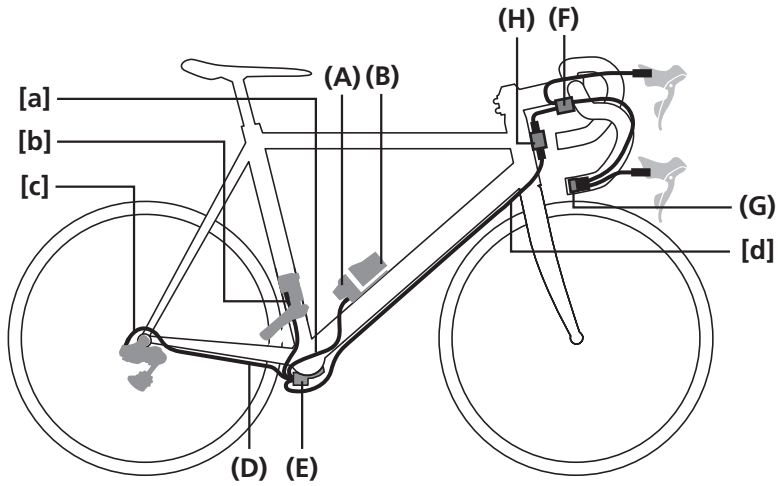

Built-in frame type

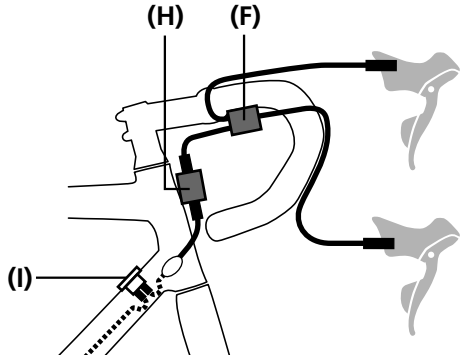

(A) Battery mount SM-BMR2/ BM-DN100
(B) Lithium ion battery (external type) SM-BTR1
(C) Junction A SM-EW90-A/B
(D) Electric wire EW-SD50
(E) Junction B SM-JC40
(F) EW-JC130
(G) EW-RS910 (Built-in bar end type)
(H) EW-WU111
(I) EW-RS910 (Built-in frame type)

TECH TIPS

- **Cable length (EW-SD50)**

  [a] + [b] ≤ 900 mm
  [a] + [c] ≤ 1,100 mm
  [d] ≤ 1,400 mm
  [e], [f] ≤ 500 mm

  Cable length (EW-JC130)
  EW-JC130 is available in three variations of differing length.
  Refer to the table and select the appropriate variation.

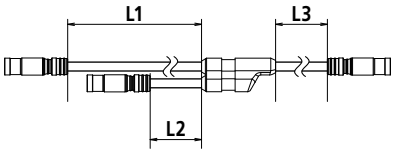

	L1 (mm)	L2 (mm)	L3 (mm)
EW-JC130-SS	350	50	250
EW-JC130-SM	350	50	450
EW-JC130-MM	550	50	550

- If using EW-WU111, use it in combination with BT-DN110, BT-DN110-A or BM-DN100.

Electric wire wiring diagram (overall conceptual diagram)

Built-in type (SM-JC41)

SM-EW90-A/B

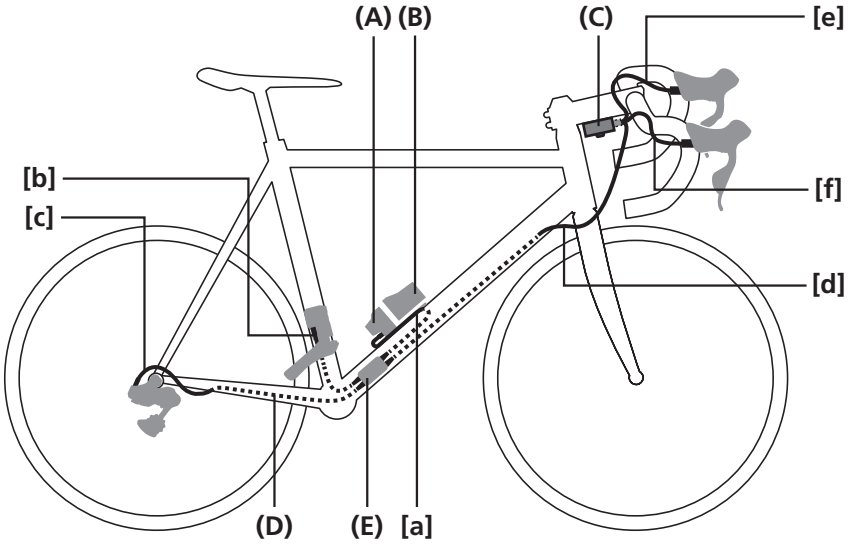

EW-RS910

Built-in bar end type

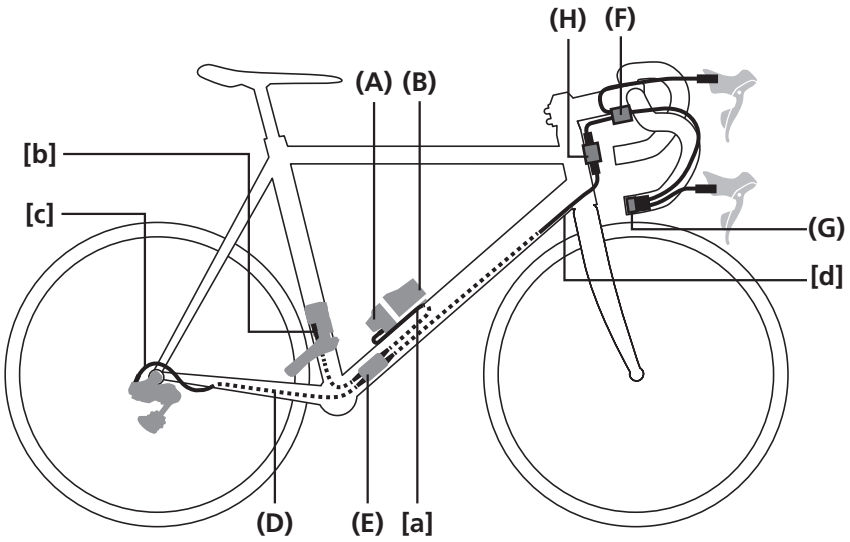

Built-in frame type

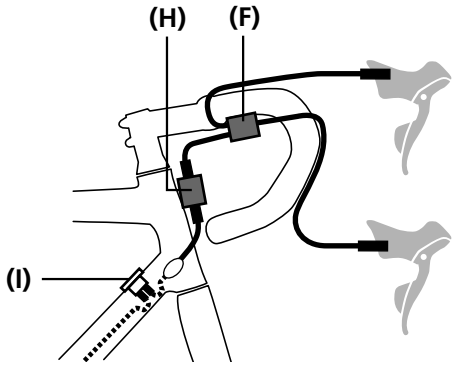

(A) Battery mount SM-BMR2/ BM-DN100
(B) Lithium ion battery (external type) SM-BTR1
(C) Junction A SM-EW90-A/B
(D) Electric wire EW-SD50-I
(E) Junction B SM-JC41
(F) EW-JC130
(G) EW-RS910 (Built-in bar end type)
(H) EW-WU111
(I) EW-RS910 (Built-in frame type)

TECH TIPS

- **Cable length (EW-SD50)**

  [a] + [b] ≤ 1,500 mm
  [a] + [c] ≤ 1,700 mm
  [d] ≤ 1,400 mm
  [e], [f] ≤ 500 mm

Cable length (EW-JC130)
EW-JC130 is available in three variations of differing length.
Refer to the table and select the appropriate variation.

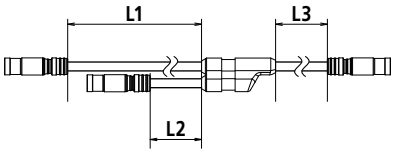

	L1 (mm)	L2 (mm)	L3 (mm)
EW-JC130-SS	350	50	250
EW-JC130-SM	350	50	450
EW-JC130-MM	550	50	550

- If using EW-WU111, use it in combination with BT-DN110, BT-DN110-A or BM-DN100.

Electric wire wiring diagram (overall conceptual diagram)

Built-in battery type SM-BTR2/BT-DN110/BT-DN110-A

Built-in type (SM-JC41)

SM-EW90-A/B

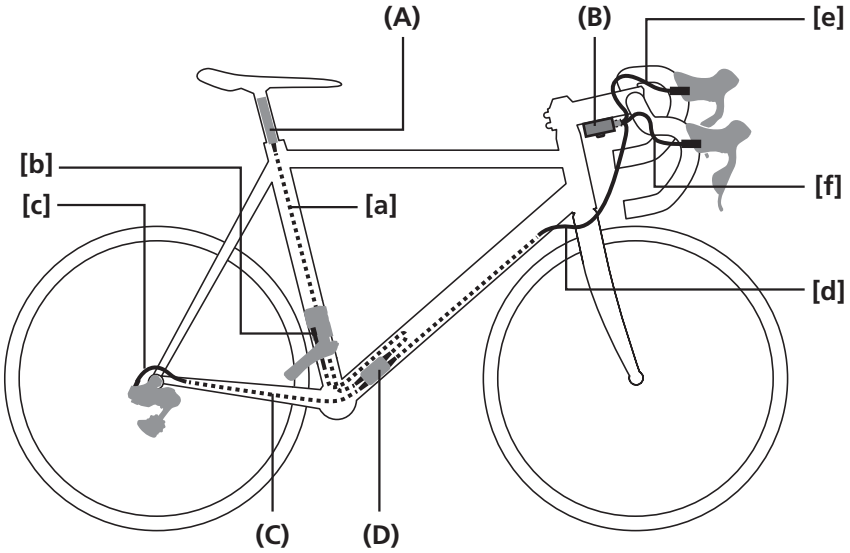

EW-RS910
Built-in bar end type

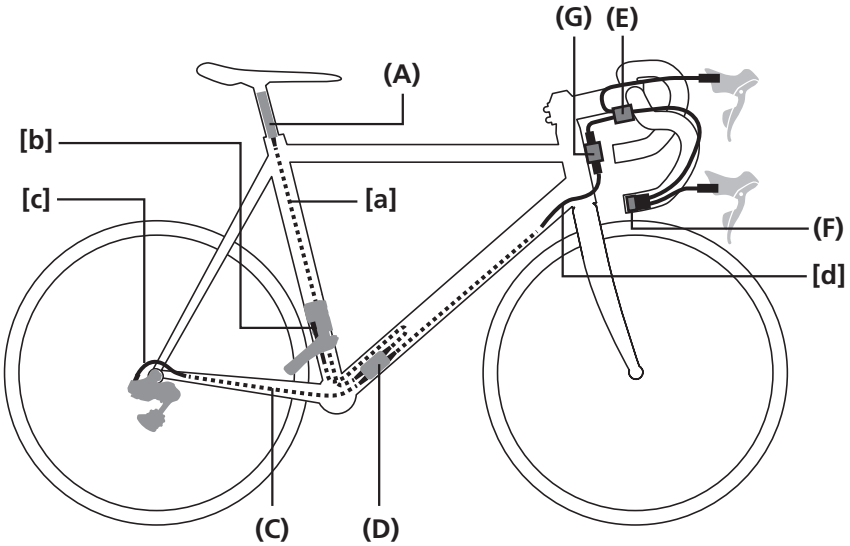

Built-in frame type

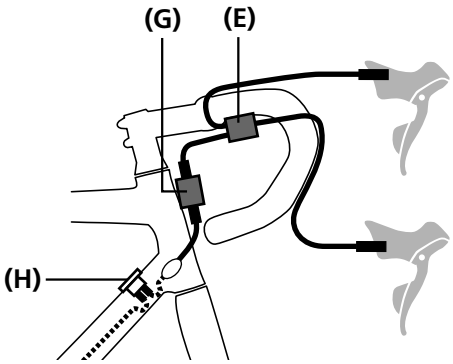

(A) Lithium ion battery (built-in type) SM-BTR2/BT-DN110
(B) Junction A SM-EW90-A/B
(C) Electric wire EW-SD50-I
(D) Junction B SM-JC41
(E) EW-JC130
(F) EW-RS910 (Built-in bar end type)
(G) EW-WU111
(H) EW-RS910 (Built-in frame type)

TECH TIPS

- **Cable length (EW-SD50)**

  [a] + [b] ≤ 1,500 mm
  [a] + [c] ≤ 1,700 mm
  [d] ≤ 1,400 mm
  [e], [f] ≤ 500 mm

  Cable length (EW-JC130)
  EW-JC130 is available in three variations of differing length.
  Refer to the table and select the appropriate variation.

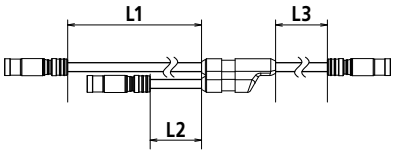

	L1 (mm)	L2 (mm)	L3 (mm)
EW-JC130-SS	350	50	250
EW-JC130-SM	350	50	450
EW-JC130-MM	550	50	550

- If using EW-WU111, use it in combination with BT-DN110, BT-DN110-A or BM-DN100.

■ Electric wire wiring diagram (junction A side)

SM-EW90-A (3 port type)

Drop handlebar type

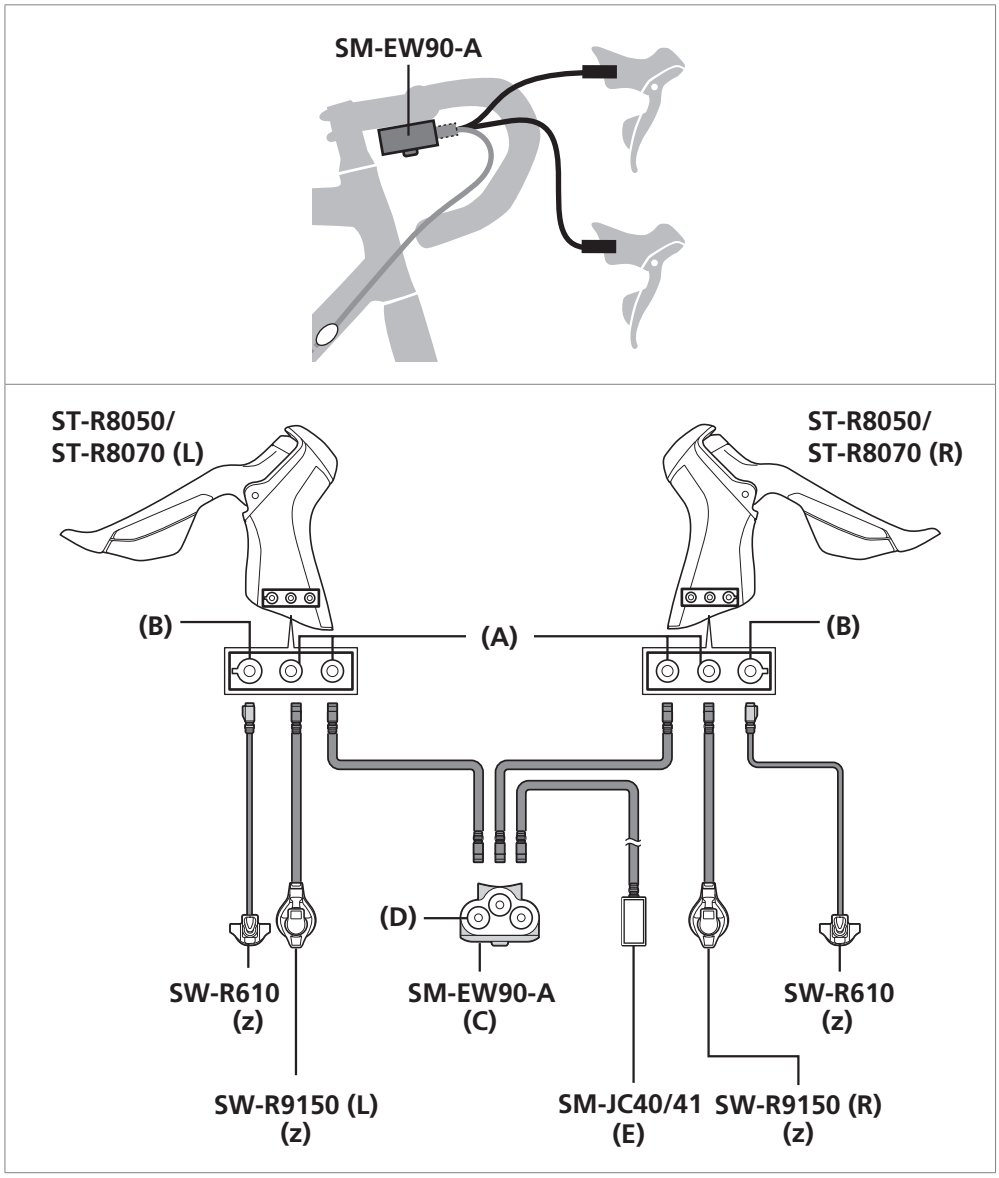

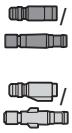
E-TUBE plug

Satellite shifter plug

(z) Option

(A) E-TUBE port ×2
(B) Port for satellite shifter (ST-R8070 does not have this port.)
(C) Junction A
(D) E-TUBE port ×3
(E) Junction B
(F) E-TUBE port (for SD300)
(G) EW-SD300-I
(H) EW-AD305

Electric wire wiring diagram (junction A side)

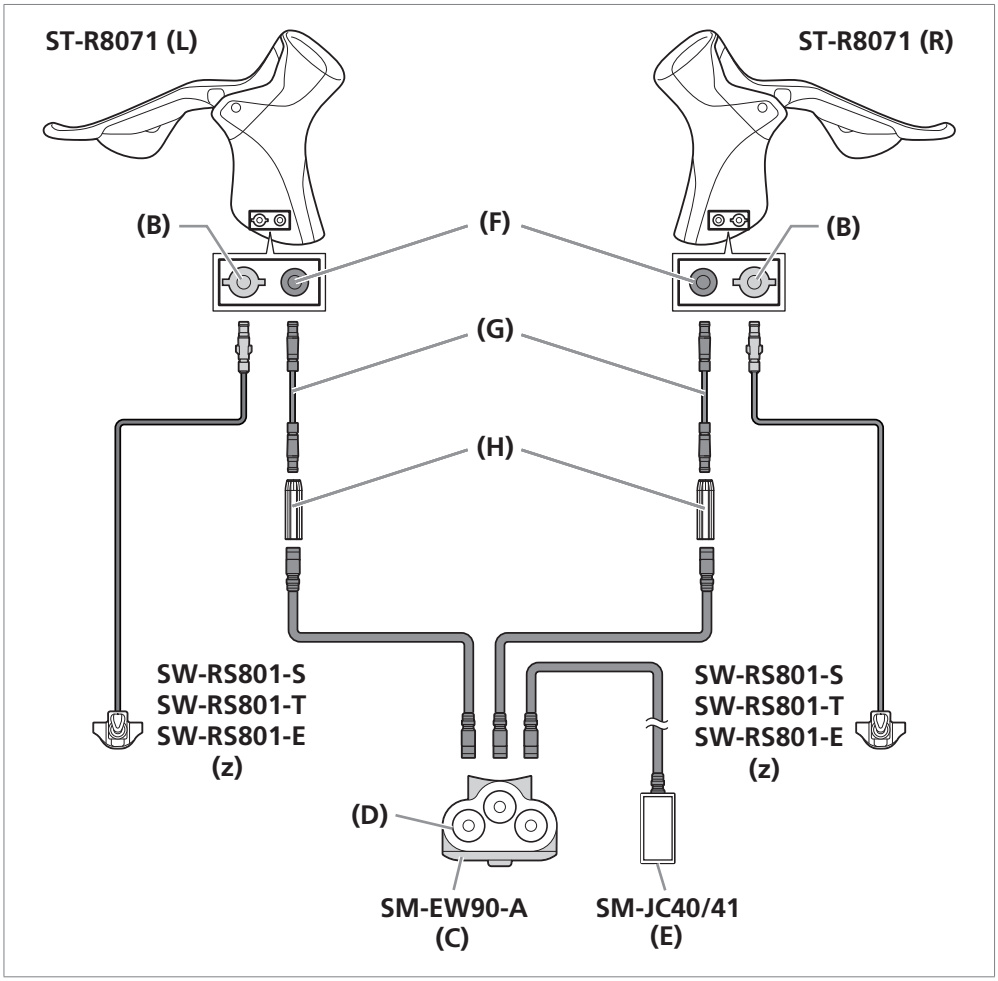

E-TUBE plug

Satellite shifter plug

(z) Option

(A) E-TUBE port ×2
(B) Port for satellite shifter (ST-R8070 does not have this port.)
(C) Junction A
(D) E-TUBE port ×3
(E) Junction B
(F) E-TUBE port (for SD300)
(G) EW-SD300-I
(H) EW-AD305

Electric wire wiring diagram (junction A side)

Clip-on bar type

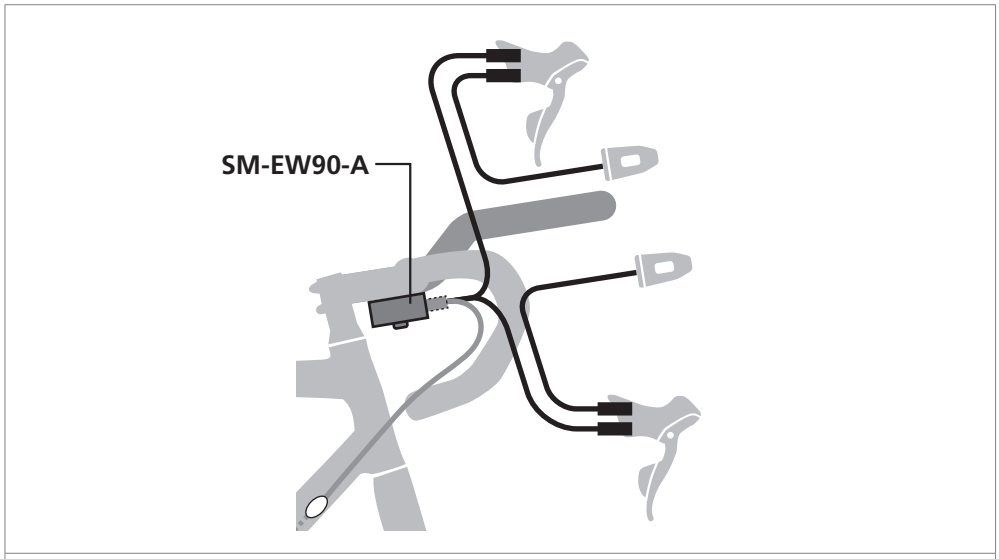

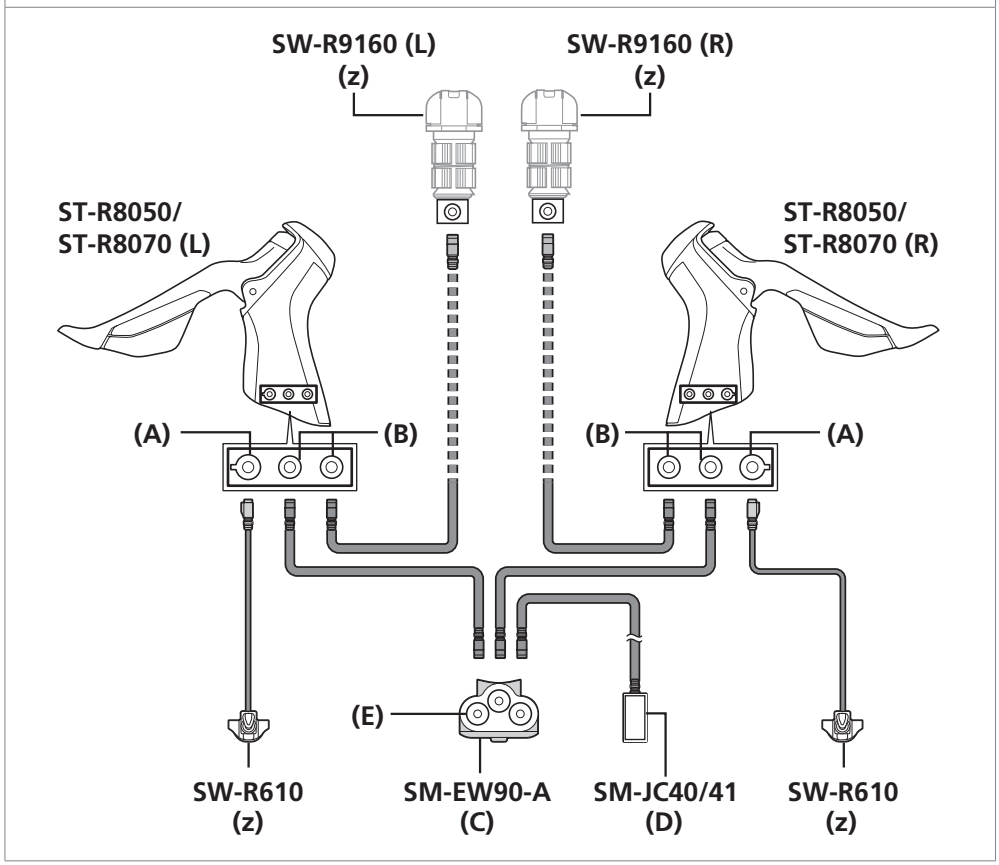

	E-TUBE plug
	Satellite shifter plug

(z)	Option

(A)	Port for satellite shifter (ST-R8070 does not have this port.)
(B)	E-TUBE port ×2
(C)	Junction A
(D)	Junction B
(E)	E-TUBE port ×3

Electric wire wiring diagram (junction A side)

SM-EW90-B (5 port type)

Clip-on bar type

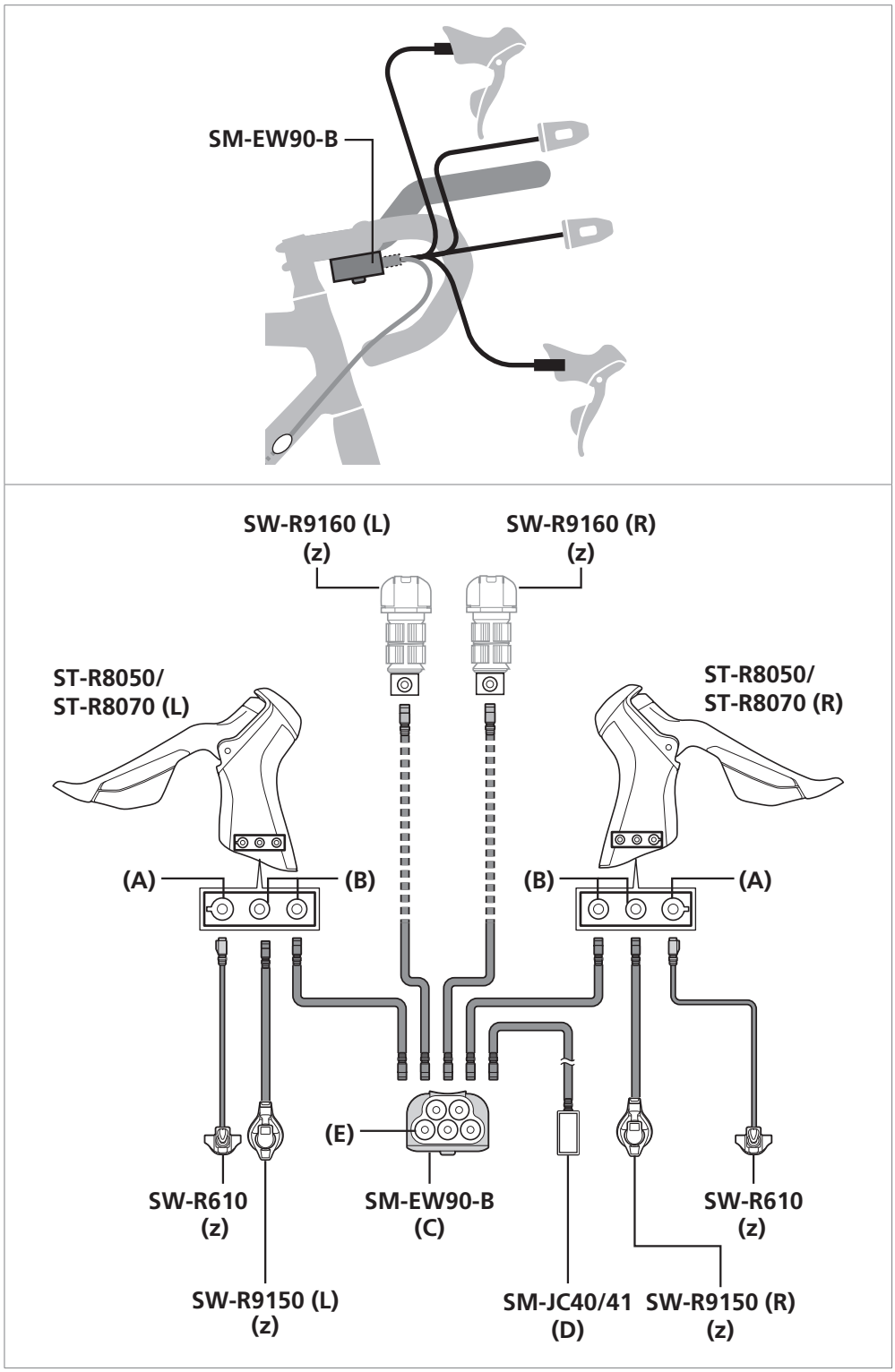

E-TUBE plug

Satellite shifter plug

(z) Option

(A) Port for satellite shifter (ST-R8070 does not have this port.)
(B) E-TUBE port ×2
(C) Junction A
(D) Junction B
(E) E-TUBE port ×5
(F) E-TUBE port (for SD300)
(G) EW-SD300-I
(H) EW-AD305

Electric wire wiring diagram (junction A side)

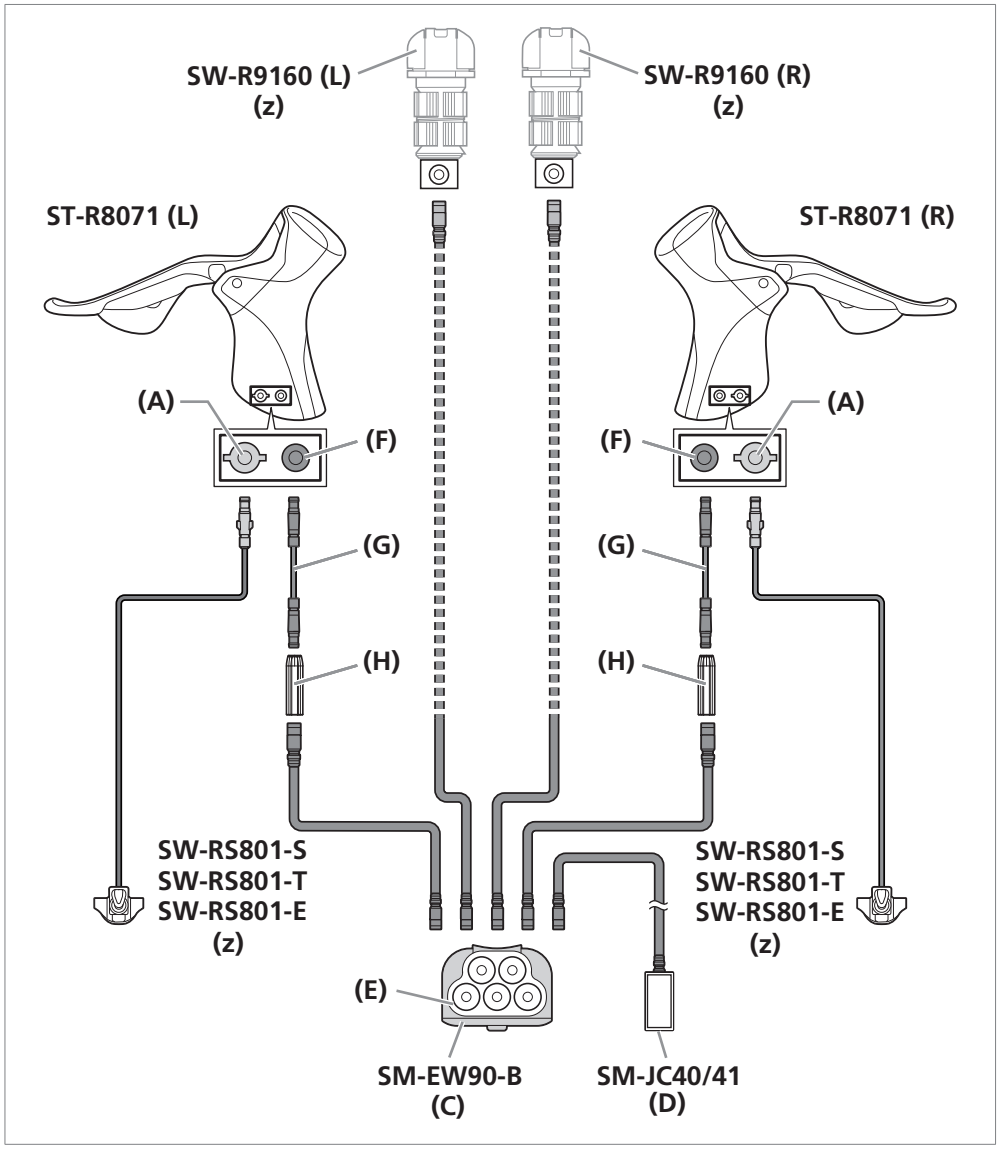

E-TUBE plug

Satellite shifter plug

(z) Option

(A) Port for satellite shifter (ST-R8070 does not have this port.)
(B) E-TUBE port ×2
(C) Junction A
(D) Junction B
(E) E-TUBE port ×5
(F) E-TUBE port (for SD300)
(G) EW-SD300-I
(H) EW-AD305

Electric wire wiring diagram (junction A side)

Drop handlebar type

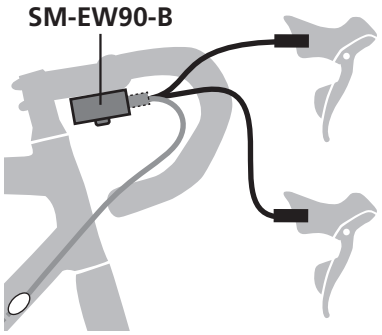

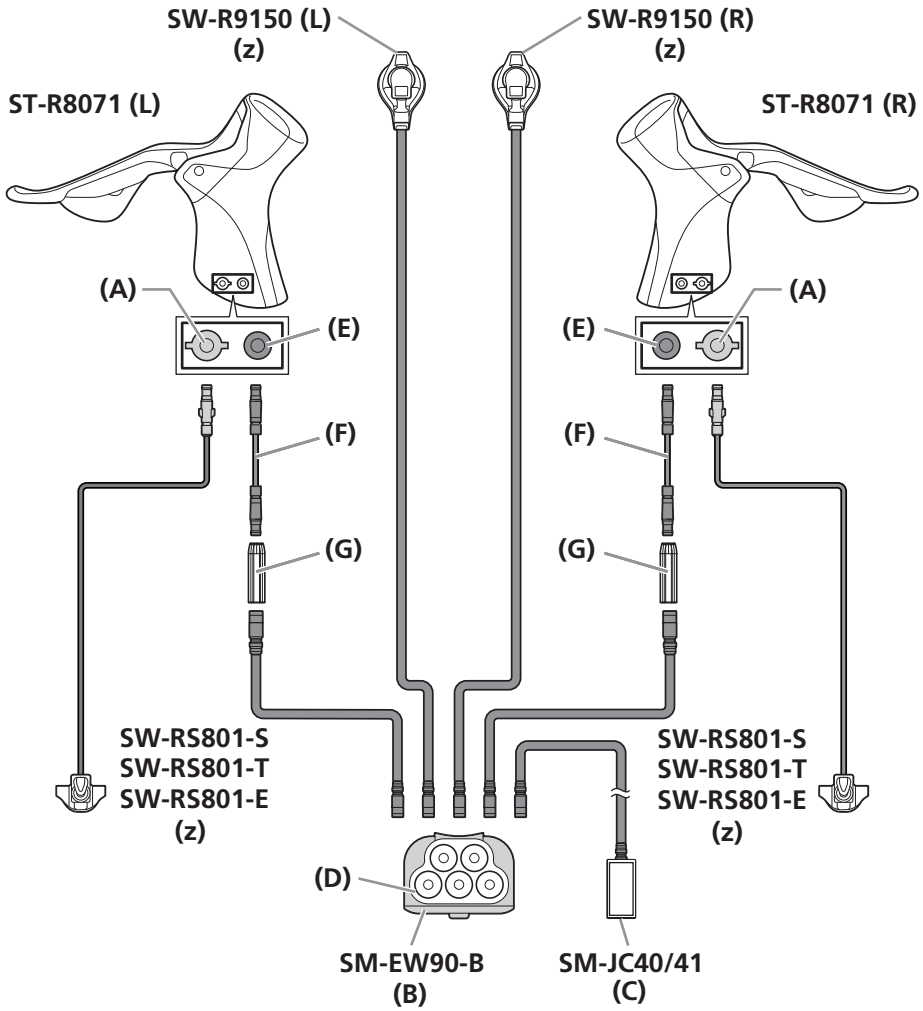

	E-TUBE plug
	Satellite shifter plug

(z)	Option

(A)	Port for satellite shifter (ST-R8070 does not have this port.)
(B)	Junction A
(C)	Junction B
(D)	E-TUBE port ×5
(E)	E-TUBE port (for SD300)
(F)	EW-SD300-I
(G)	EW-AD305

Electric wire wiring diagram (junction A side)

Time trial/triathlon handle type

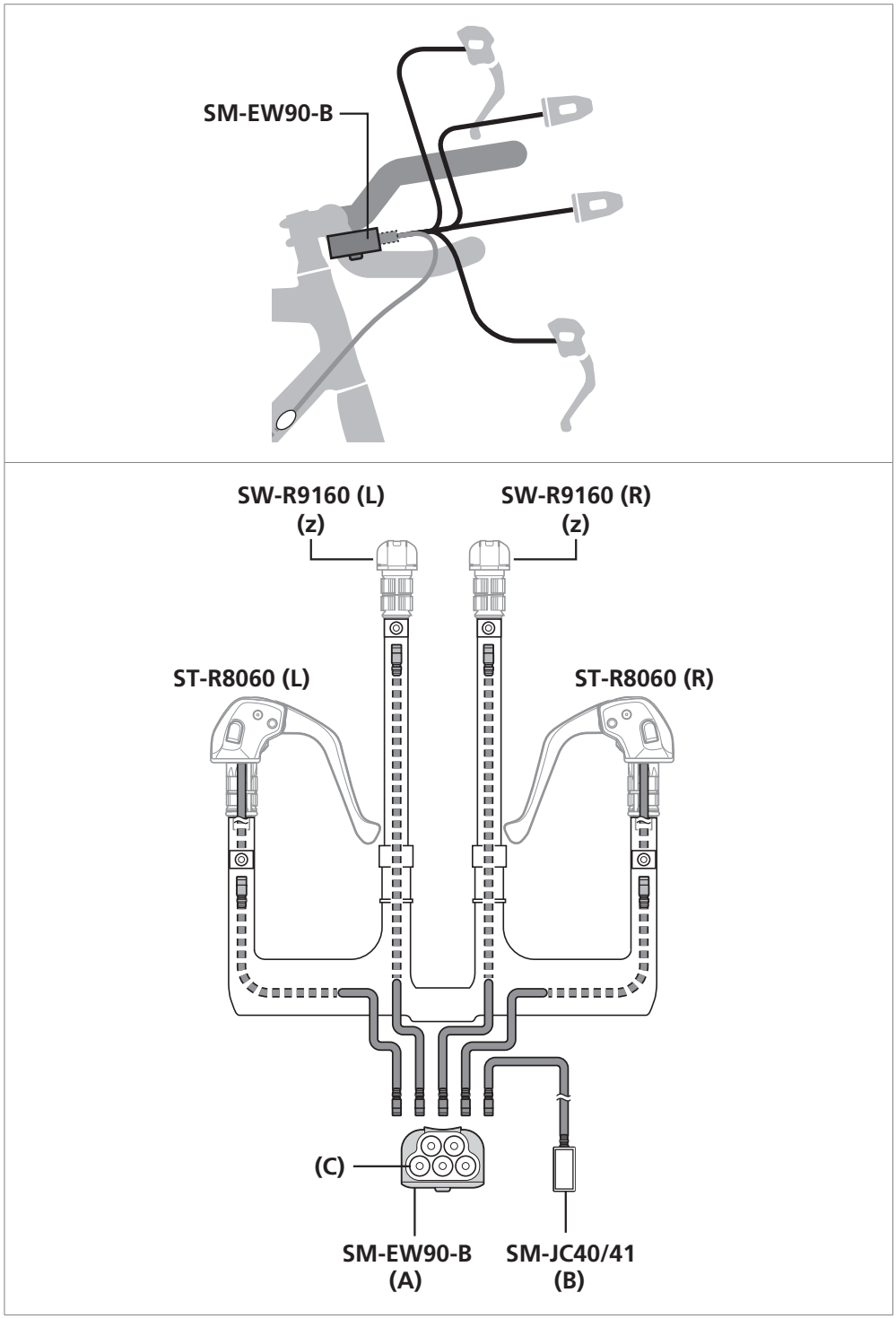

E-TUBE plug

Satellite shifter plug

(z) Option

(A) Junction A
(B) Junction B
(C) E-TUBE port ×5

Electric wire wiring diagram (junction A side)

EW-RS910 (Built-in bar end type)

Drop handlebar type

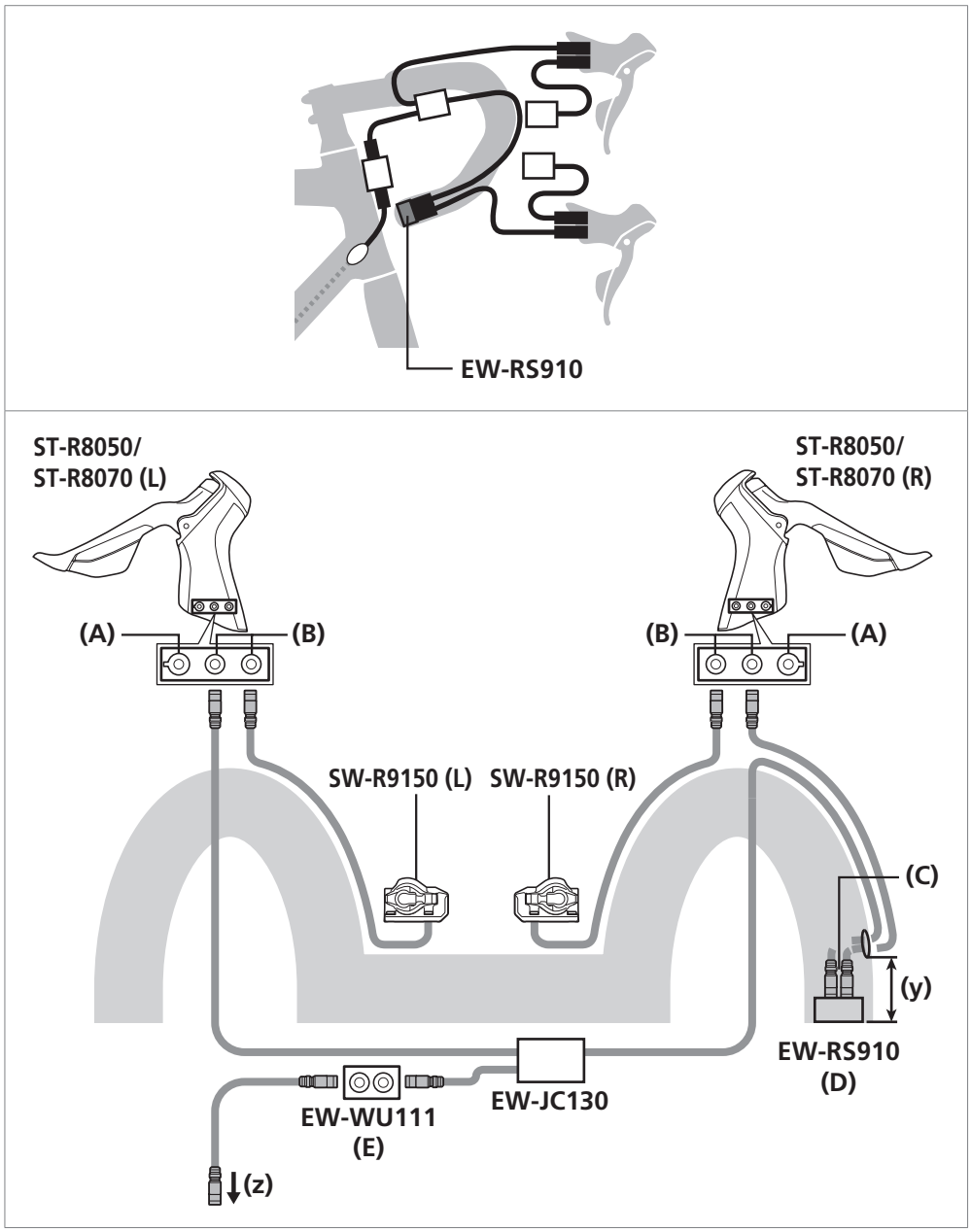

E-TUBE plug

(y) At least 40 mm

(z) To frame (Junction B)

(A) Port for satellite shifter (ST-R8070 does not have this port.)

(B) E-TUBE port ×2

(C) E-TUBE port ×2

(D) Junction A (2 port bar end type junction)

(E) Wireless unit

(F) E-TUBE port (for SD300)

(G) EW-SD300-I

(H) EW-AD305

Electric wire wiring diagram (junction A side)

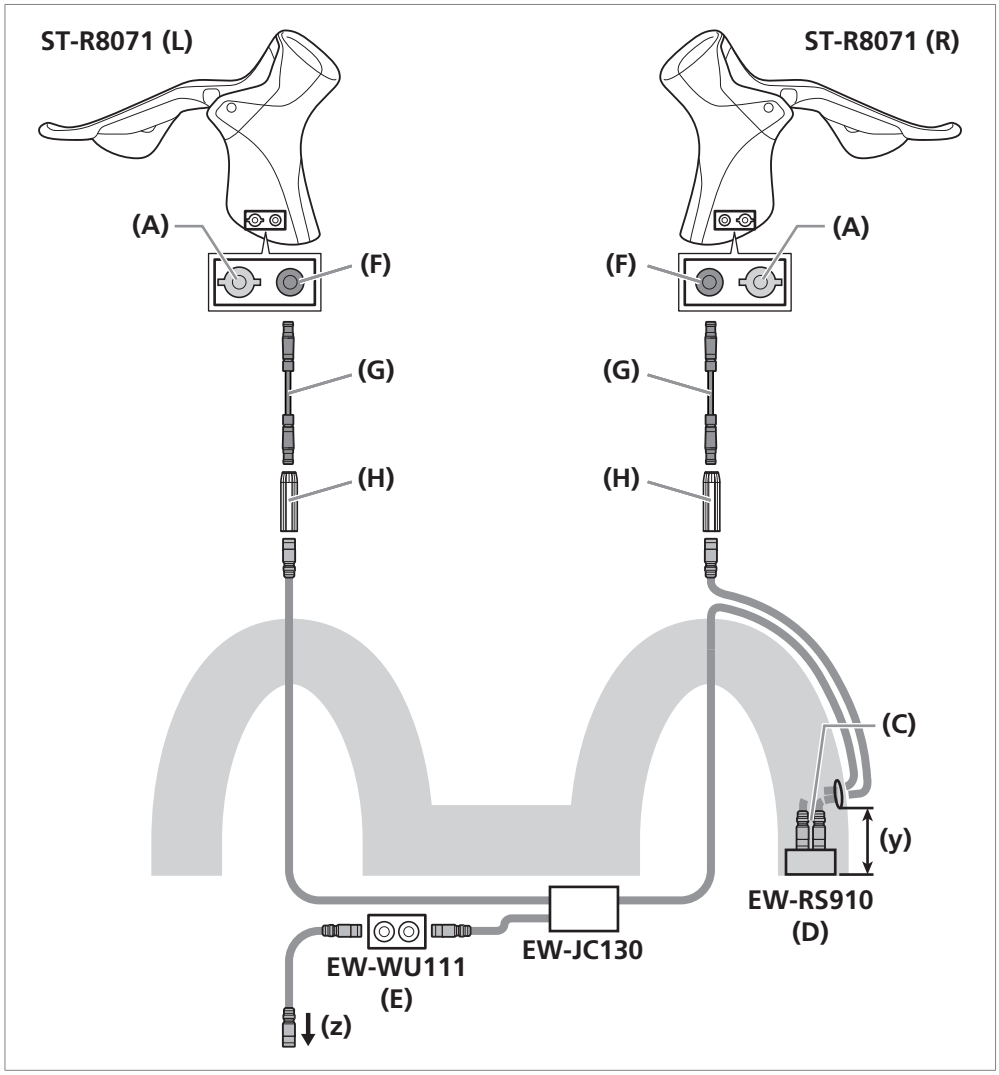

E-TUBE plug

(y) At least 40 mm

(z) To frame (Junction B)

(A) Port for satellite shifter (ST-R8070 does not have this port.)

(B) E-TUBE port ×2

(C) E-TUBE port ×2

(D) Junction A (2 port bar end type junction)

(E) Wireless unit

(F) E-TUBE port (for SD300)

(G) EW-SD300-I

(H) EW-AD305

Electric wire wiring diagram (junction A side)

EW-RS910 (Built-in frame type)

Drop handlebar type

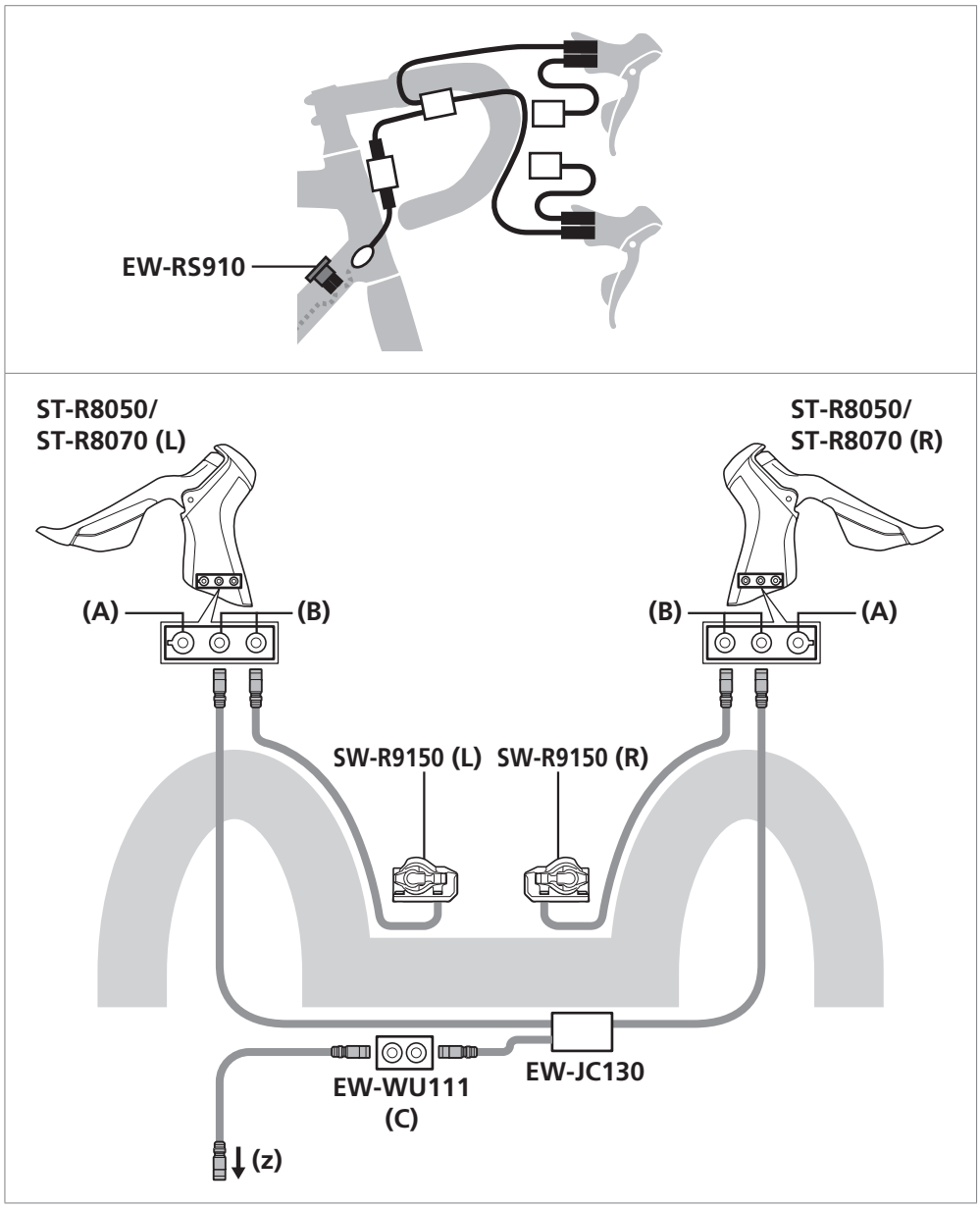

	E-TUBE plug
(z)	To frame (EW-RS910)
(A)	Port for satellite shifter (ST-R8070 does not have this port.)
(B)	E-TUBE port ×2
(C)	Wireless unit
(D)	E-TUBE port (for SD300)
(E)	EW-SD300-I
(F)	EW-AD305

Electric wire wiring diagram (junction A side)

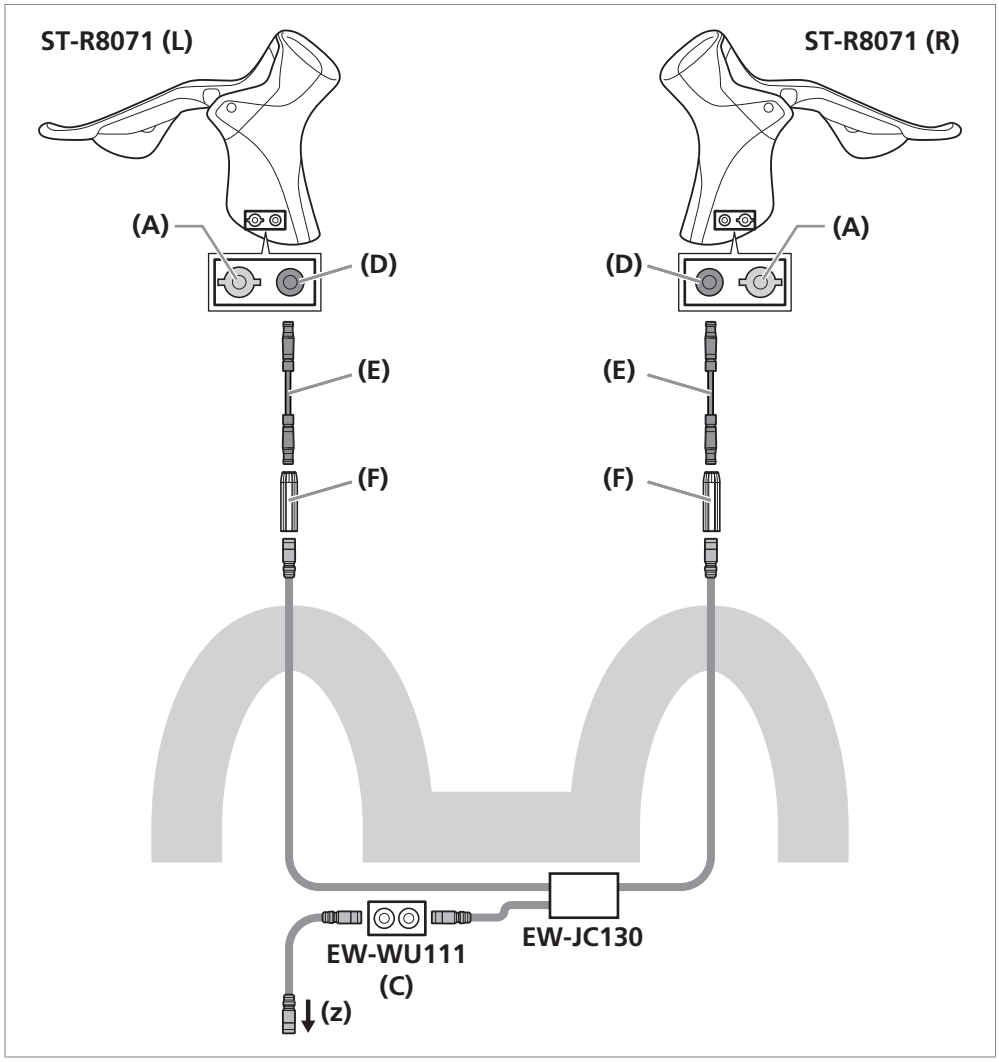

	E-TUBE plug
(z)	To frame (EW-RS910)
(A)	Port for satellite shifter (ST-R8070 does not have this port.)
(B)	E-TUBE port ×2
(C)	Wireless unit
(D)	E-TUBE port (for SD300)
(E)	EW-SD300-I
(F)	EW-AD305

Electric wire wiring diagram (junction A side)

Clip-on bar type

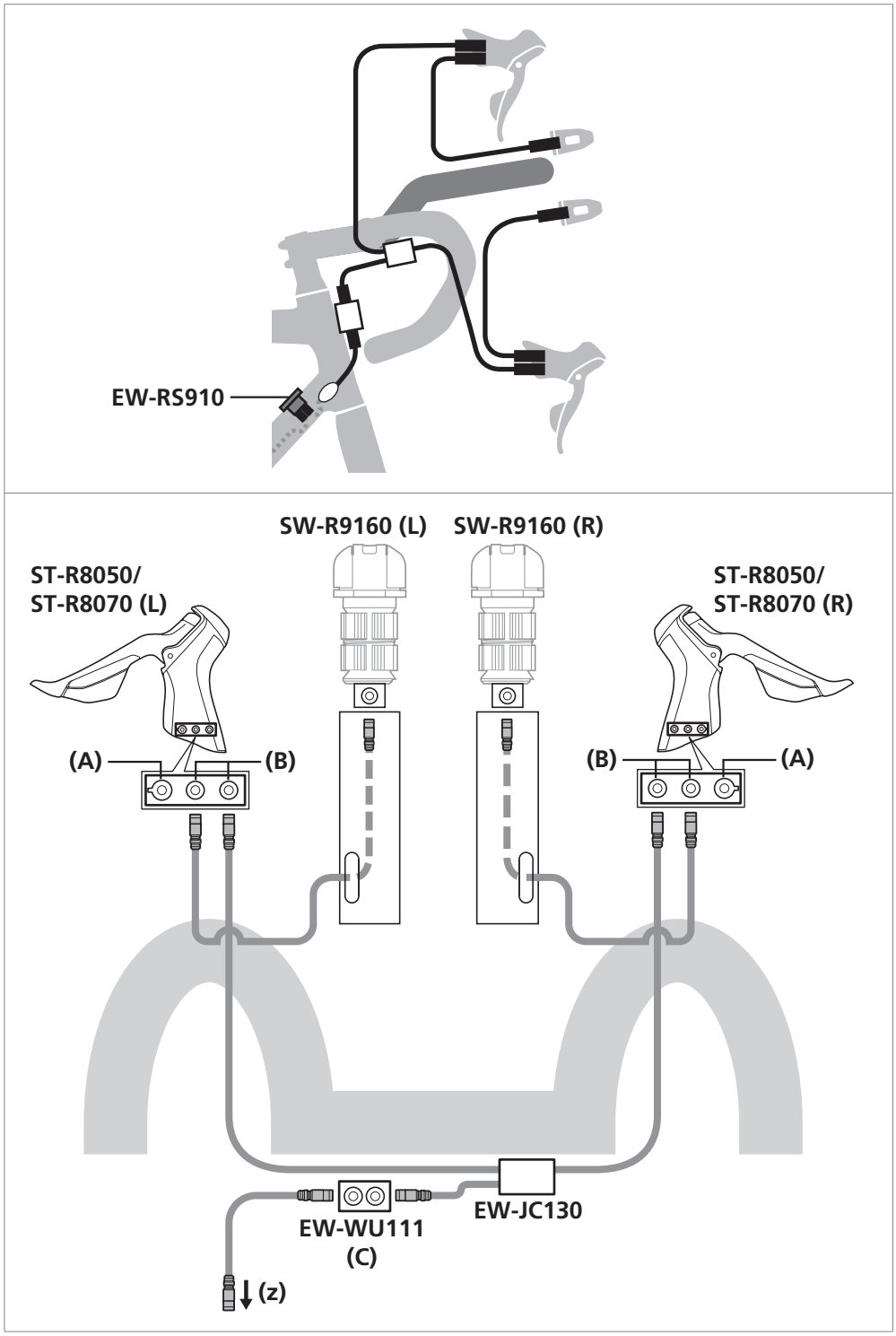

	E-TUBE plug
(z)	To frame (EW-RS910)
(A)	Port for satellite shifter (ST-R8070 does not have this port.)
(B)	E-TUBE port ×2
(C)	Wireless unit

Electric wire wiring diagram (junction A side)

Time trial/triathlon handle type

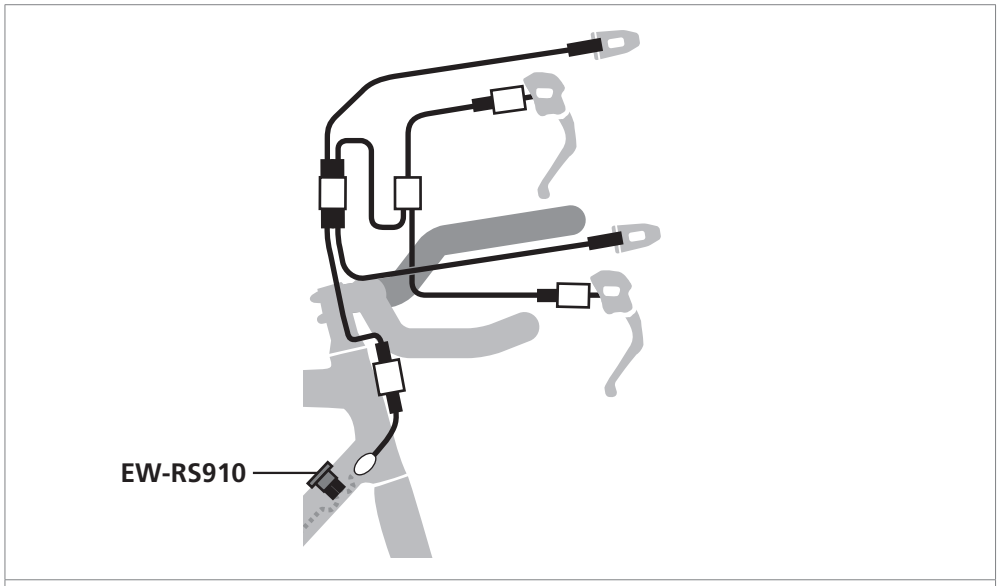

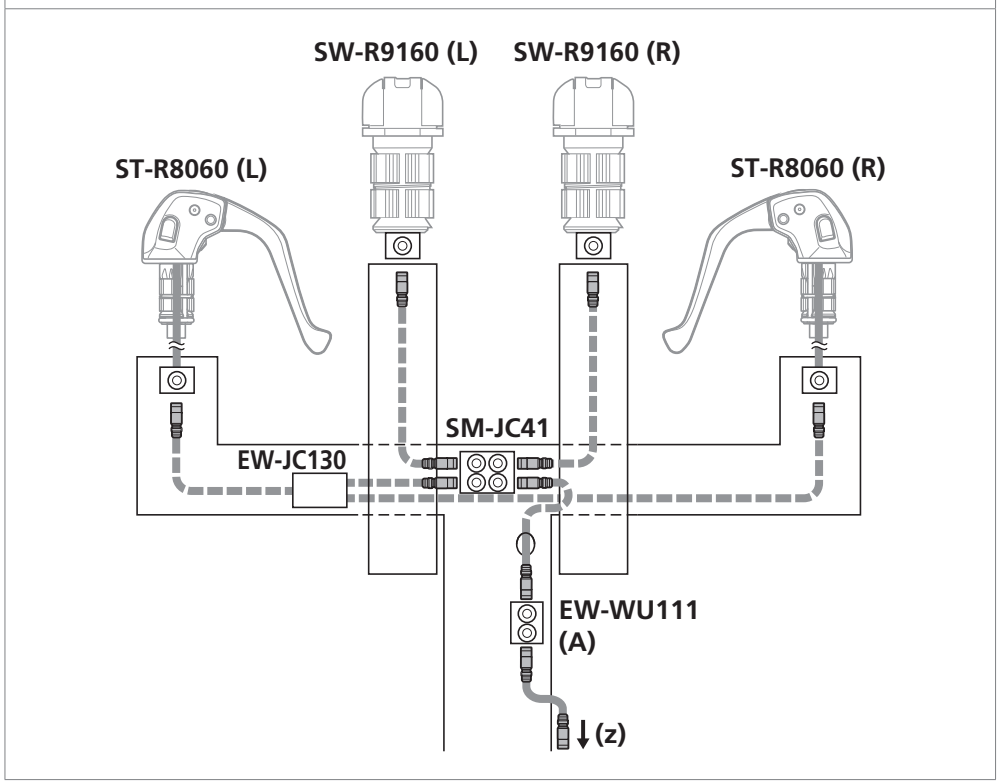

	E-TUBE plug
(z)	To frame (EW-RS910)
(A)	Wireless unit

How to use TL-EW02 (for EW-SD50-I)

How to use TL-EW02 (for EW-SD50-I)

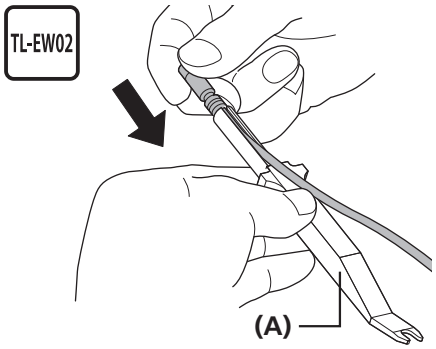

Set so that the projection on the connector is aligned with the groove on the narrow end.

(A) TL-EW02

NOTICE

Use the TL-EW02 for installation and removal of the electric wire.
When installing the electric wire, do not forcibly bend the plug.
It may result in a poor connection.
When connecting electric wires, push them in until you feel and hear a click.

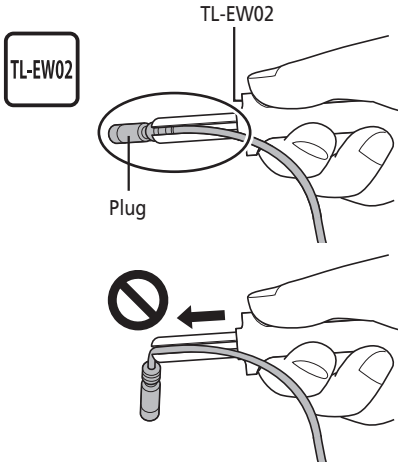

Conversion adapter

A conversion adapter (EW-AD305) is required to connect the EW-SD50-I to a component with an E-TUBE port for the EW-SD300-I.

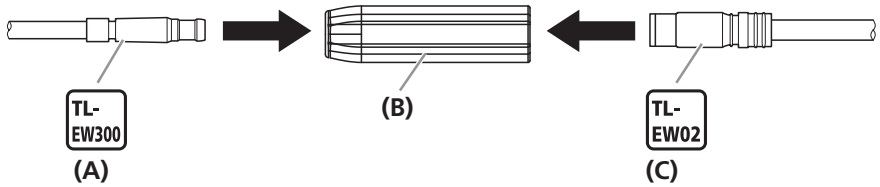

(A) Electric wire (EW-SD300-I)
(B) Conversion adapter (EW-AD305)
(C) Electric wire (EW-SD50-I)

■ How to use TL-EW300 (for EW-SD300-I)

Connecting the electric wire

1

Set the plug of the electric wire to the TL-EW300.

If there is an alignment tab on the plug of the electric wire, check the shape of the E-TUBE port you are trying to connect to, and set it aligned with the alignment tab as shown in the figure.

Without alignment tab on plug

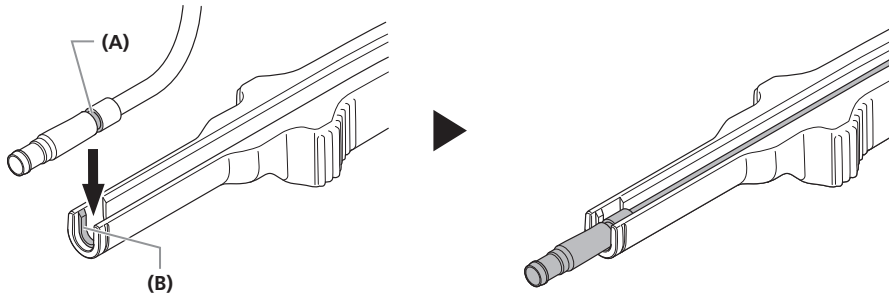

With alignment tab on plug

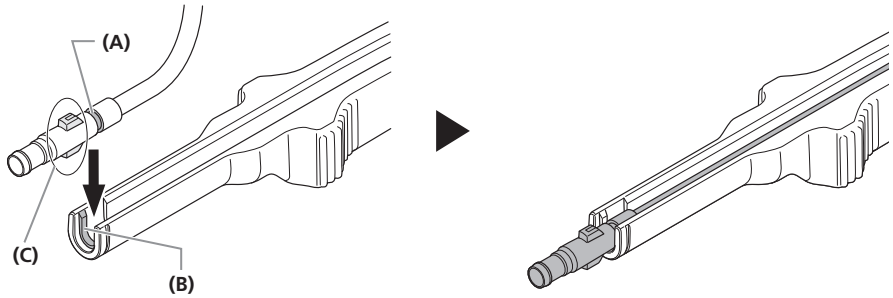

(A) Groove
(B) Guide
(C) Alignment tab

2

Insert the plug on the electric wire into the E-TUBE port.

Push it straight in until you feel it click into place.

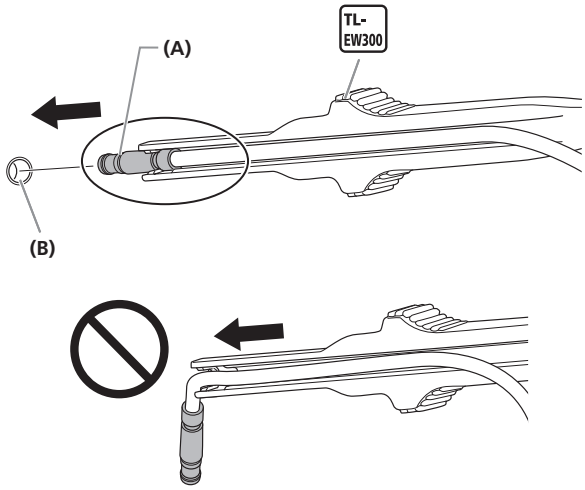

(A) Plug
(B) E-TUBE port

TECH TIPS

You can use the TL-EW300 as indicated in the figure to install the electric wire.

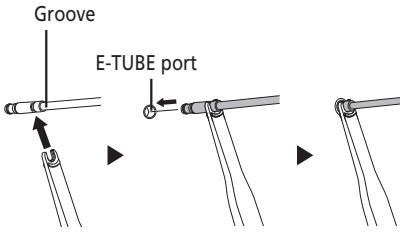

How to use TL-EW300 (for EW-SD300-I)

Disconnecting the electric wire

Disconnect the electric wire.

Insert the TL-EW300 into the groove on the plug of the electric wire.
Disconnect the electric wire from the E-TUBE port.

* As shown in the figure, use part (A) of the TL-EW300 as a fulcrum, move the tool like a lever, then disconnect the plug.

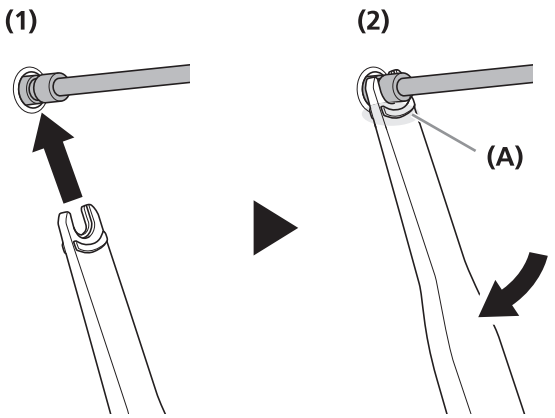

TECH TIPS

If there is limited space to insert the tool, you can use the TL-EW300 as indicated in the figure to disconnect the electric wire.

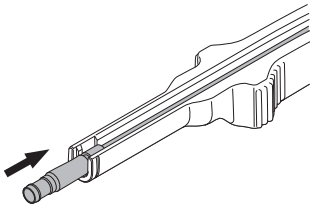

Installation of the dual control lever and brake cable

WARNING

- Do not apply grease or other lubricants to the inner cable.
- When the inner cable is passed through the outer casing, be sure to wipe the inner cable fixing section with a cloth before fixing the inner cable. Grease may adhere to the inner cable fixing section and prevent sufficient holding force.

NOTICE

- Be careful not let the BC-9000/BC-R680 inner cable come into contact with the brake lever or the metal section (adjustment section) of the caliper brake.
  Fuzz may be generated when the inner cable is installed or when the coating is damaged during use, but this will not affect its functions.
- Use cables which are long enough that they still have some looseness even when the handlebars are turned all the way to both sides.

TECH TIPS

For information on how to install the brake cable, refer to the dealer's manual for BR-R8000.

Cable to be used

BC-9000/BC-R680 Inner cable	Outer casing
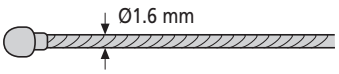	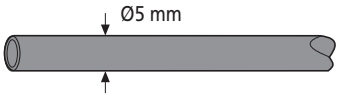
BC-1051 Inner cable	**SLR Outer casing**
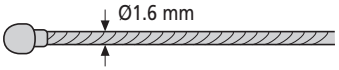	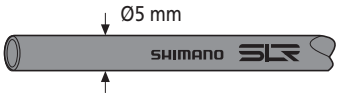

ST-R8050

1

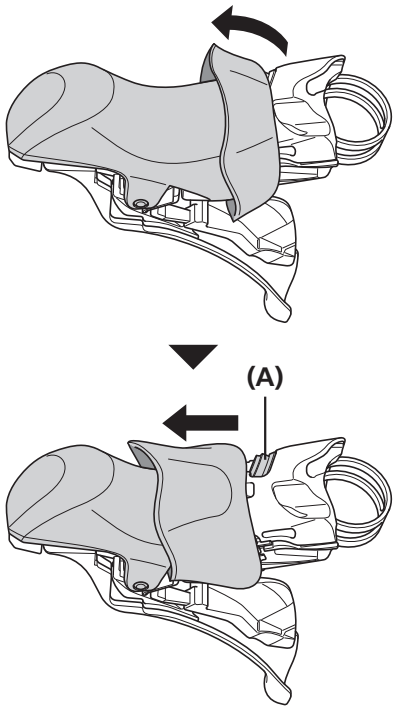

Turn over the bracket cover from the back side.

Gently turn over the ends of the bracket cover with both hands and slowly push them down.

(A) Clamp bolt

NOTICE

Forcibly pulling it may cause damage to the bracket cover because of its material properties.

2

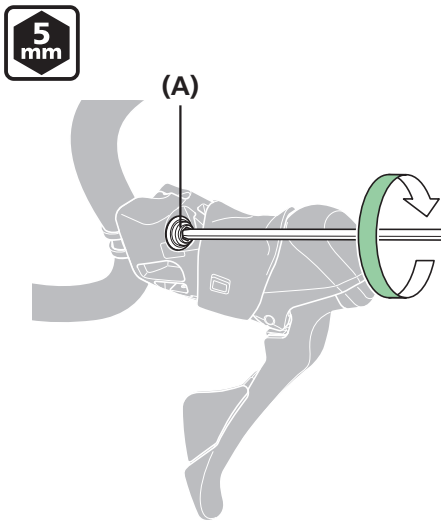

Use a 5 mm hexagon wrench to tighten the clamp bolt at the top of the bracket.

(A) Clamp bolt

Tightening torque	
5 mm	6 - 8 N·m

NOTICE

- **With a carbon handle, even the recommended tightening torque may be too tight and cause damage to the handle, or too loose and not sufficiently attached. For the appropriate torque value, consult with the manufacturer of the completed bicycle or the manufacturer of the handle.**
- The clamp band, clamp bolt, and clamp nut are not compatible with other products. Do not use with components that are used in other products.

To be continued on next page

3

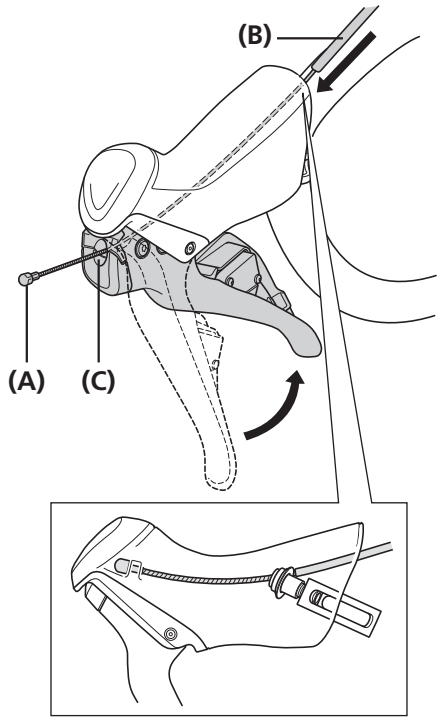

Depress the lever as if to brake and pass the brake cable through.

(A) Inner end
(B) Outer casing
(C) Cable hook

NOTICE

Make sure that the inner end is firmly set in the cable hook.

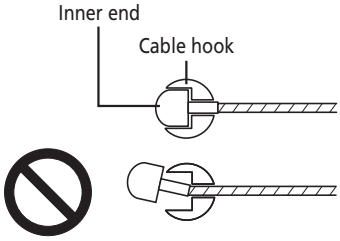

4

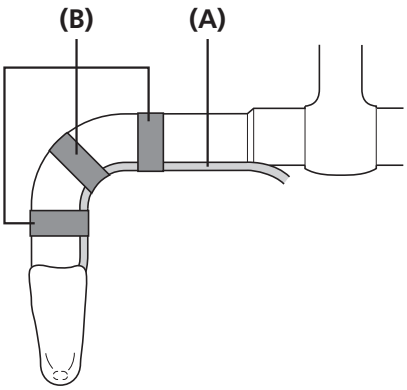

Temporarily secure the outer casing to the handlebar (by using tape or a similar material).

(A) Outer casing
(B) Tape

ST-R8060

1

Route the outer casing and electric wire through the handlebar.

When installing the lever, adjust the length of the outer casing so that it can fit securely into the outer casing holder.

2

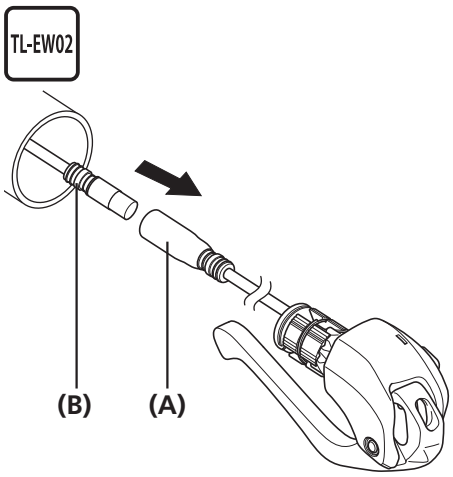

Connect the electric wire to the connector (female) extending from the lever.

(A) Connector (female)
(B) Electric wire

3

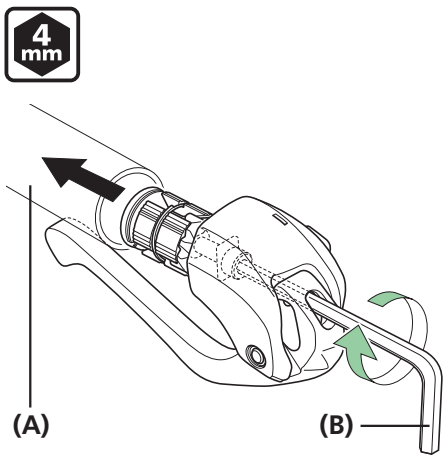

Install the brake lever to the handlebar by tightening clockwise with a hexagon wrench.

(A) Handlebar
(B) 4 mm hexagon wrench

Tightening torque	
4 mm	6 - 8 N·m

NOTICE

The knurled grooves should be aligned.

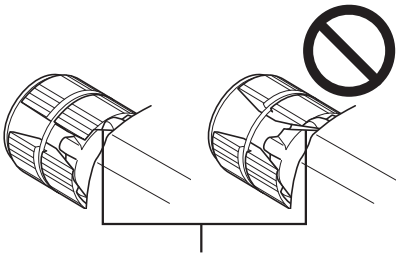

TECH TIPS

The illustration is of the right brake lever.

To be continued on next page

4

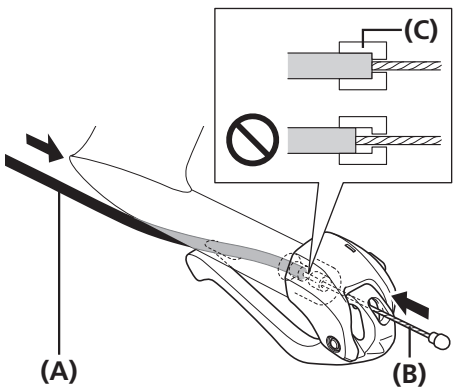

Pass the inner cable through.

(A) Outer casing
(B) Inner cable
(C) Outer casing holder

NOTICE

Inner end
Make sure that the inner end is firmly set in the cable hook.

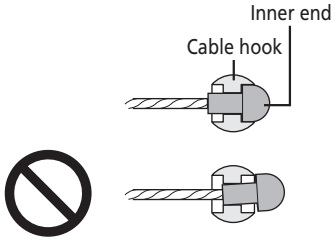

■ Installation of the front derailleur

Check if the frame to which the front derailleur will be installed is a direct mount type or band type.

Installation of the front derailleur (direct mount type frame)

NOTICE

- With a carbon frame, even the recommended tightening torque may be too tight and cause damage to the frame, or too loose and not sufficiently attached to the frame. For the appropriate torque value, consult with the manufacturer of the completed bicycle or the manufacturer of the frame.
- When installing a front derailleur to a direct mount frame, it is recommended to attach a support screw to ensure optimum performance of the front derailleur. When a support screw is attached, there is a risk that it will cause damage to the frame; therefore, be sure to attach a support plate. (However, in some cases a support screw and support plate may not be able to be attached.)

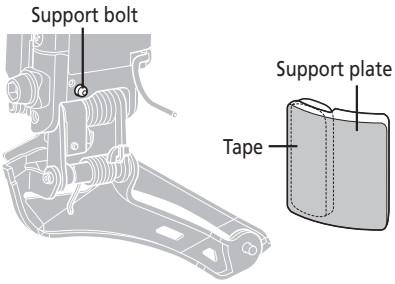

1

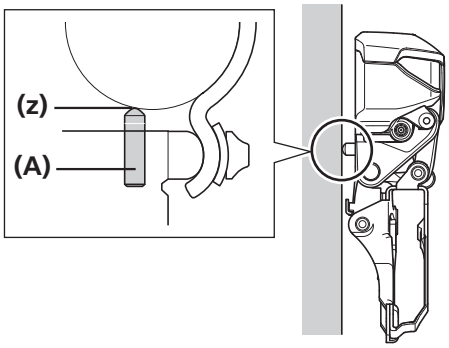

Check where the support bolt makes contact with the seat tube when adjusting the front derailleur support bolt.

(z) Location where support bolt touches seat tube

(A) Support bolt

TECH TIPS

After the checking the position, loosen the support bolt and return it to its original position.

To be continued on next page

2

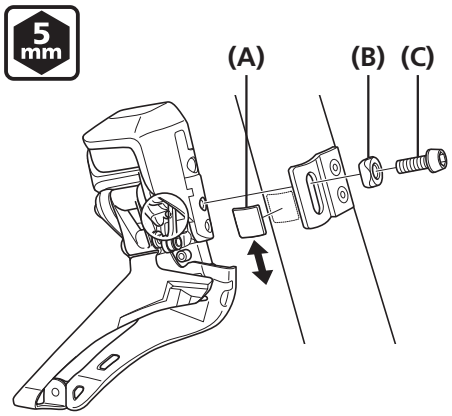

Attach the support plate where the support screw makes contact with the seat tube.

After that install the front derailleur to the frame.

(A) Support plate
(B) Mounting washer
(C) Fixing bolt

Tightening torque	
5 mm	5 - 7 N·m

TECH TIPS

- Position the support plate tape so that the tape does not come into direct contact with the support screw.

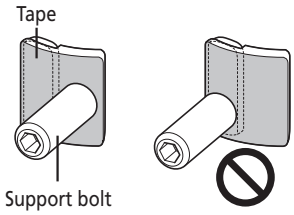

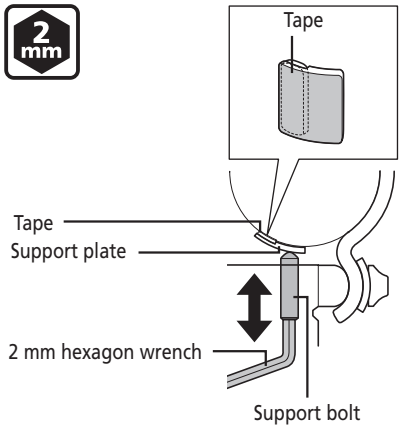

3

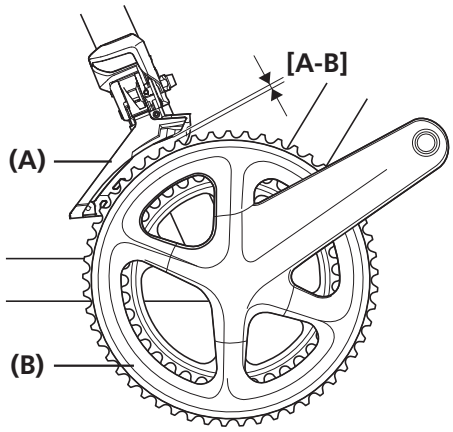

Adjust so that the clearance between the outer plate and the largest chainring is 1 - 3 mm.

[A-B] Clearance: 1 – 3 mm

(A) Outer plate
(B) Largest chainring

To be continued on next page

4

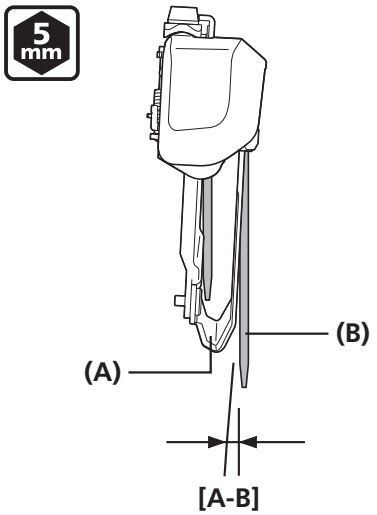

Use a 5 mm hexagon wrench to secure the outer plate so that the flat part of the plate is directly above the largest chainring and so that the rear edge of the chain guide is 0.5 - 1 mm in from the front edge.

[A-B] 0.5 - 1 mm

(A) Chain guide
(B) Front chainwheel (largest chainring)

Tightening torque	
5 mm	5 - 7 N·m

5

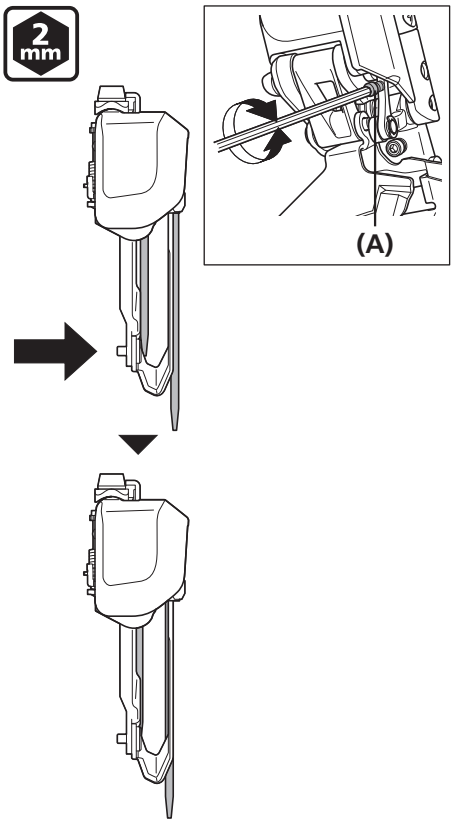

Adjust the position of the front derailleur.

Position the front derailleur so that the flat part of the outer plate is directly above and parallel to the largest chainring.

Turn the support bolt with a 2 mm hexagon wrench to adjust.

(A) Support bolt

When installing the front derailleur using a clamp band (SM-AD91)

1

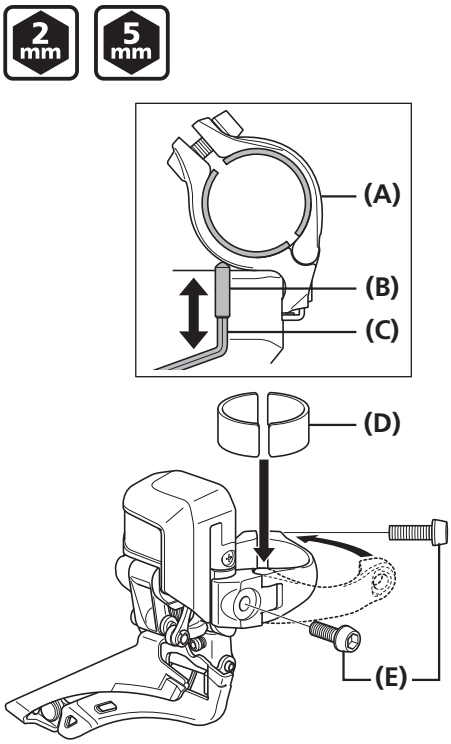

Install the clamp band to the front derailleur.

Depending on the frame, mount a band adapter to the clamp band.

After that install the front derailleur to the frame.

(A) Clamp band
(B) Support bolt
(C) 2 mm hexagon wrench
(D) Band adapter (for Ø28.6)
(E) Fixing bolt

Tightening torque	
5 mm	5 - 7 N·m

NOTICE

- Use a support screw and support plate even when installing the front derailleur using a clamp band (SM-AD91). Refer to "Installation of the front derailleur (direct mount type frame)" for details on use.
- SM-AD11/15 cannot be mounted.

2

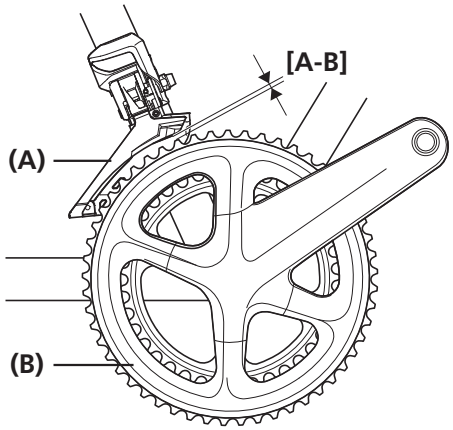

Adjust so that the clearance between the outer plate and the largest chainring is 1 - 3 mm.

[A-B] Clearance: 1 – 3 mm

(A) Outer plate
(B) Largest chainring

To be continued on next page

3

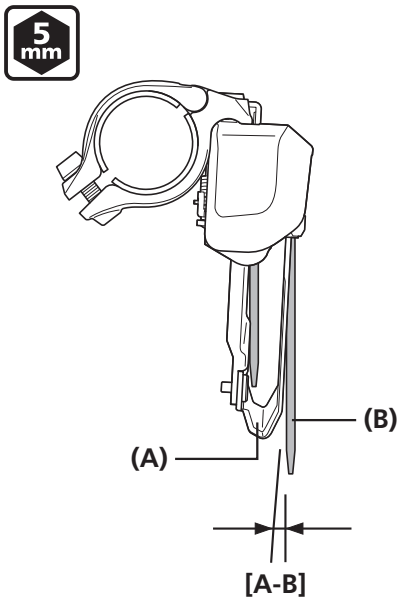

Use a 5 mm hexagon wrench to secure the outer plate so that the flat part of the plate is directly above the largest chainring and so that the rear edge of the chain guide is 0.5 - 1 mm in from the front edge.

[A-B] 0.5 – 1 mm

(A) Chain guide
(B) Front chainwheel (largest chainring)

Tightening torque	
5 mm	5 - 7 N·m

4

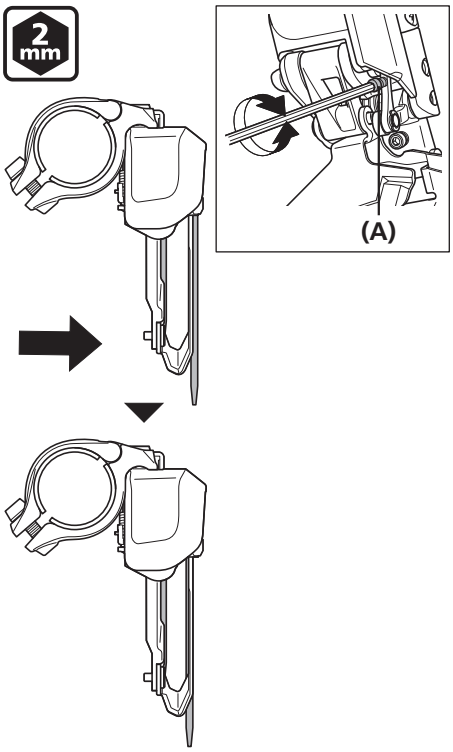

Adjust the position of the front derailleur.

Position the front derailleur so that the flat part of the outer plate is directly above and parallel to the largest chainring.

Turn the support bolt with a 2 mm hexagon wrench to adjust.

(A) Support bolt

Installation of the rear derailleur

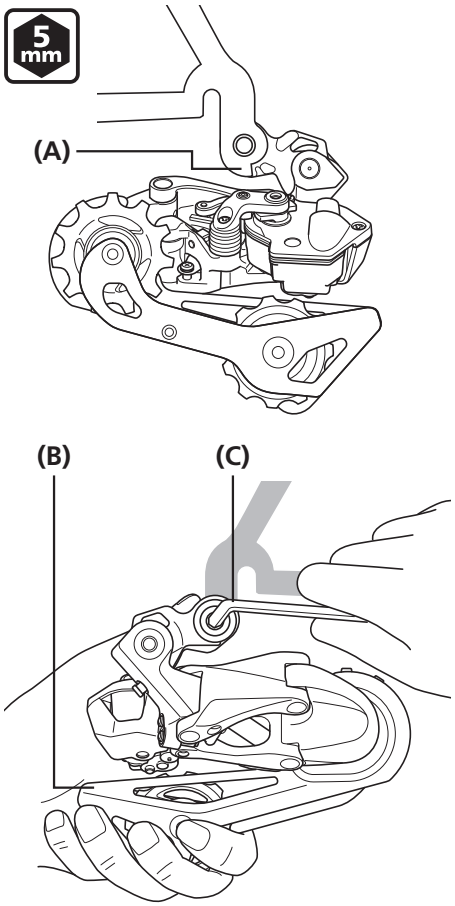

Install the rear derailleur to the frame.

(A) B-tension stop
(B) Pulley cage
(C) 5 mm hexagon wrench

Tightening torque	
5 mm	8 - 10 N·m

NOTICE

Periodically check that there is no gap between the B-tension stop and the bracket as shown in the illustration. If there is a gap between these two parts, problems with gear shifting performance may occur.

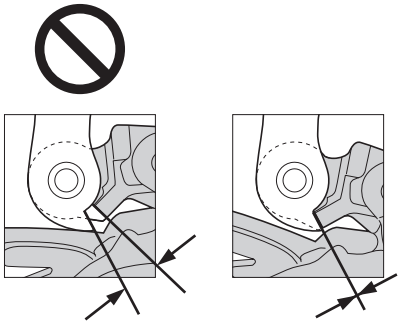

Direct mount type

Replacing with direct mount type

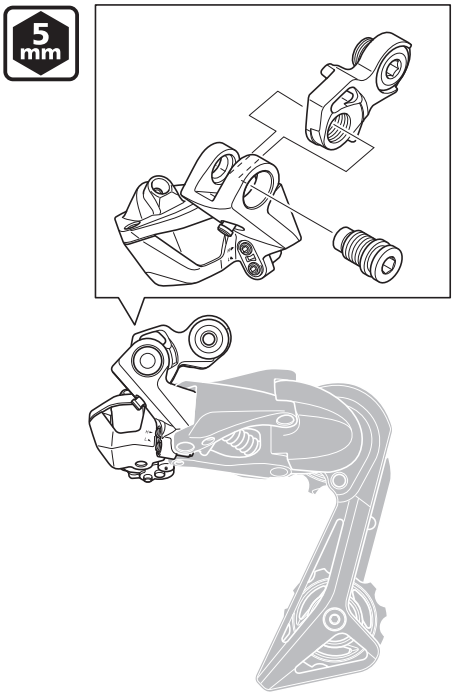

Remove the bracket axle.

Installing the shifting switch

SW-R610 (satellite shifter)

Routing map

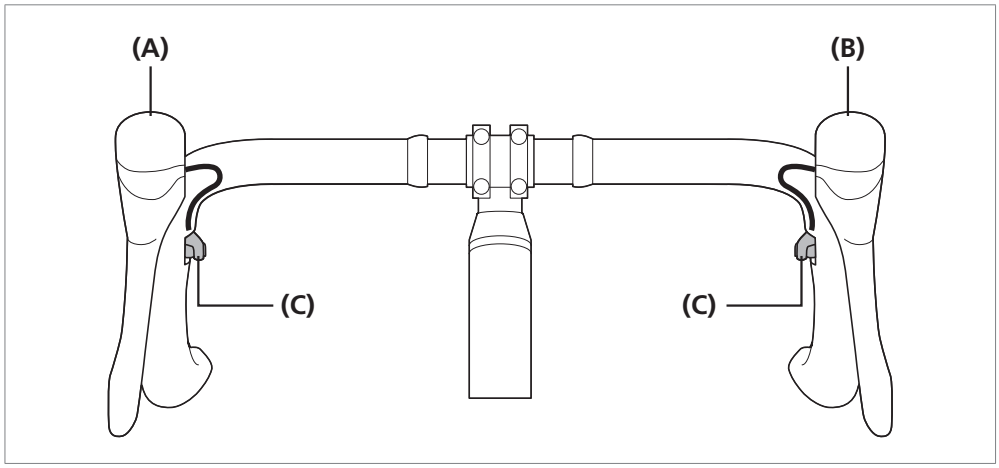

(A) ST-R8050 (R)
(B) ST-R8050 (L)
(C) SW-R610

Installation

1

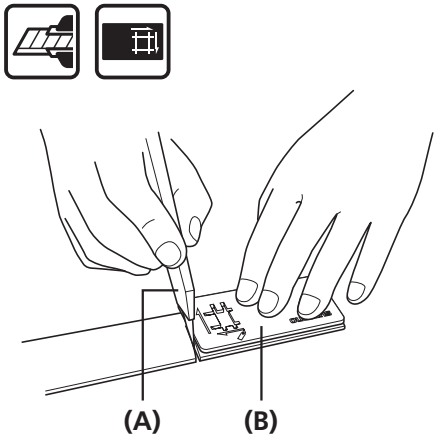

Use a utility knife or similar tool to cut the handlebar tape to the length shown in the illustration.

(A) Utility knife
(B) Handlebar tape cutout tool

TECH TIPS

Make sure that you handle the utility knife safely and correctly in accordance with the instructions which are provided with the utility knife.

2

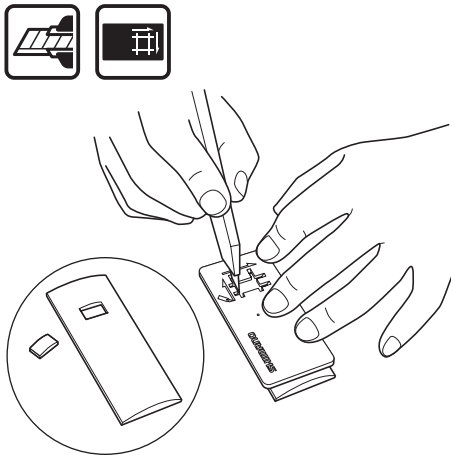

Hold the cut handlebar tape against the tool, and then cut out the holes for the switches while following the directions of the arrows on the tool.

TECH TIPS

Depending on the material used for the handlebar tape, it may be difficult to cut the tape using the tape cutting tool. If this happens, make a hole of the size shown in the illustration.

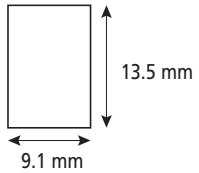

To be continued on next page

3

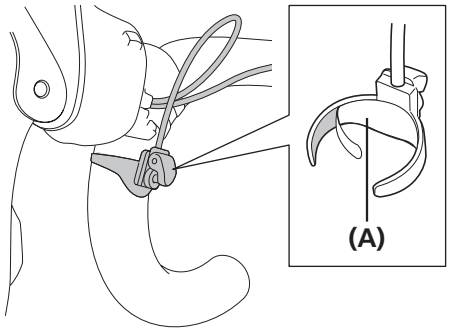

Make guide marks on the handlebars at the switch installation positions, and secure the switches with double-sided tape.

(A) Double-sided tape

4

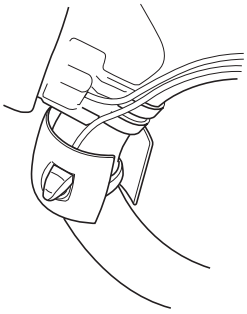

Align the hole in the handlebar tape which was cut with the switch.

5

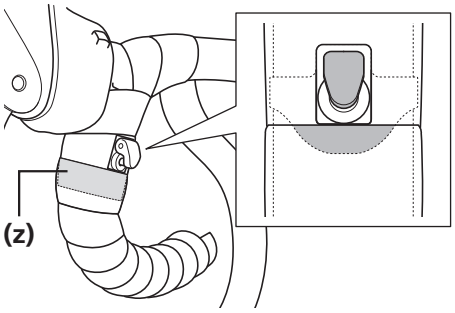

Wind on the handlebar tape.

At this time, be sure to overlap the tape below the switches.

(z) Overlap

NOTICE

In order to protect the electric wire, use handlebar tape to secure the wire. Do not secure the wire with the zip tie or the bracket for the cycle computer.

TECH TIPS

The illustration shows an example of how to wind the handlebar tape.
Wind the handlebar tape on securely so that the switches do not move.

SW-R9150

Routing map

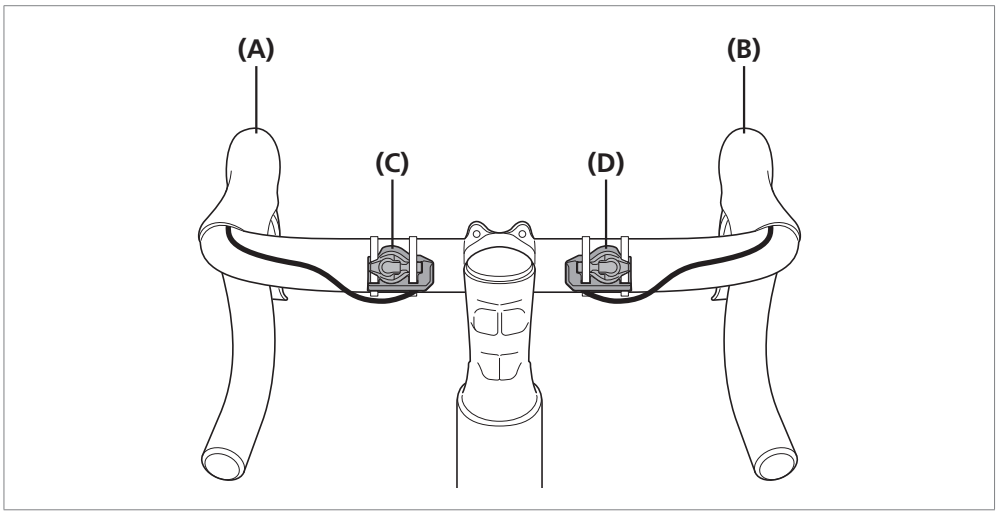

(A) ST-R8050/ST-R8070 (L)
(B) ST-R8050/ST-R8070 (R)
(C) SW-R9150 (L)
(D) SW-R9150 (R)

Installation

1 Check the markings (R or L) on the shifting switch and adapter, and then attach the shifting switch to the adapter.

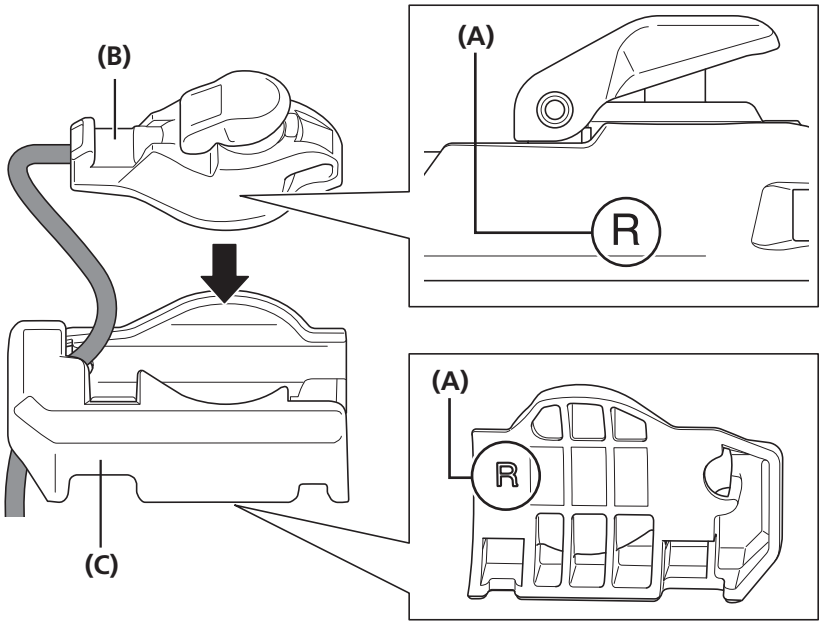

(A) Markings (R: for right, L: for left)
(B) Shifting switch
(C) Adapter

TECH TIPS

- Note that one shifting switch is for the left and one is for the right. (For details on operating the shifting switches, refer to the user's manual.)
- The illustration is of the right shifting switch.
- The adapter is available in two variations. Use the variation that matches the shape of the handlebar.

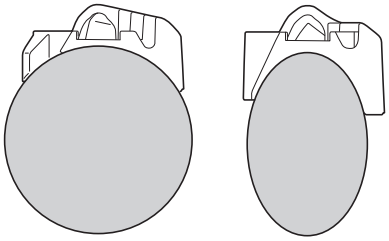

To be continued on next page

2

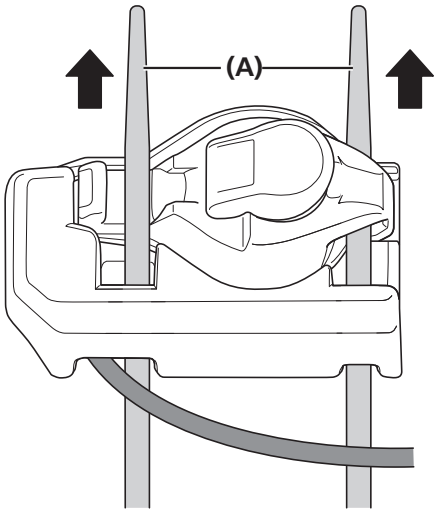

Pass zip ties through the adapter and shifting switch as shown in the illustration.

(A) Zip tie

TECH TIPS

- Make sure that the zip tie passes through the hole in the shifting switch as shown in the illustration.

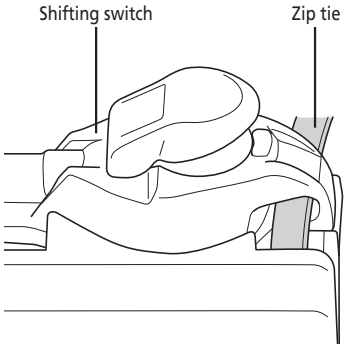

- When attaching the zip ties, make sure not to tie up the electric wire too.

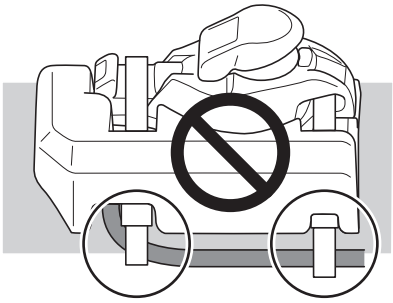

3

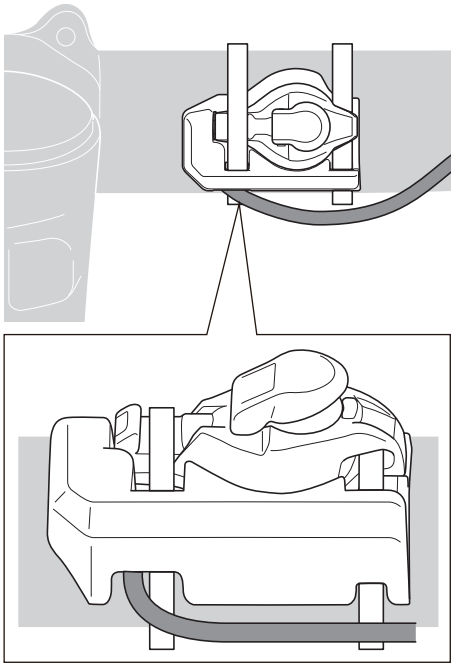

Secure to the handlebar.

To be continued on next page

4	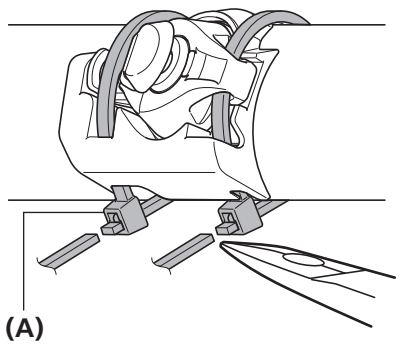	Cut off any excess zip tie with a pair of nippers or similar.
5	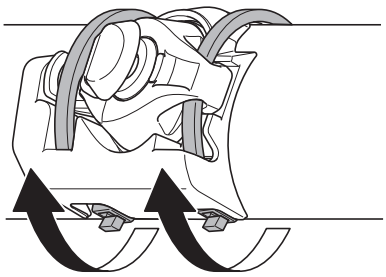	Rotate the zip tie until the square head on the zip tie fits into the notch in the adapter.

(A) Zip tie

SW-R9160 (Shifting switch for aero bar)

Routing map

SM-EW90-A/B

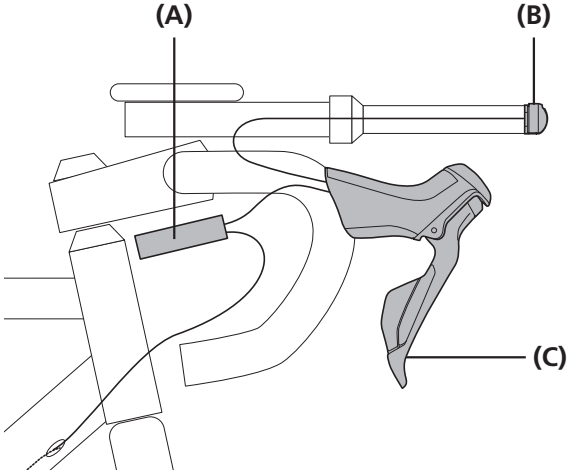

EW-RS910

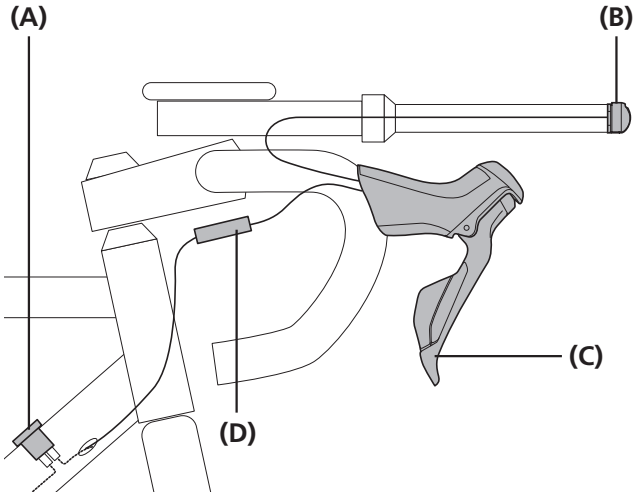

(A) Junction A
(B) SW-R9160
(C) ST-R8050/ST-R8070
(D) EW-JC130

Installation

1

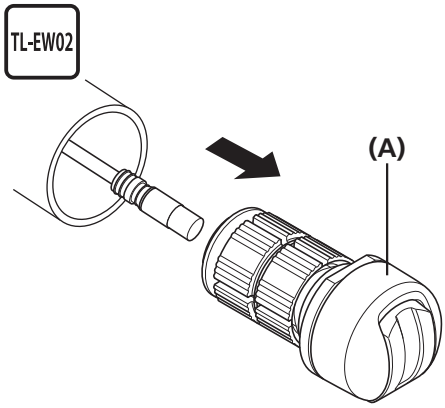

Connect the electric wire to the shifting switch.

(A) Shifting switch

2

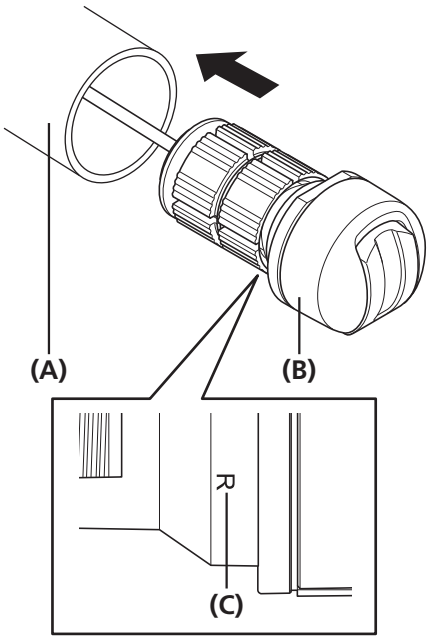

Check the marking (R or L) on the shifting switch and insert it into the end of the aero bar.

(A) Aero bar
(B) Shifting switch
(C) Markings (R: for right, L: for left)

TECH TIPS

Note that one shifting switch is designed for the left and one is for the right. (For details on operating the shifting switches, refer to the user's manual.)

3

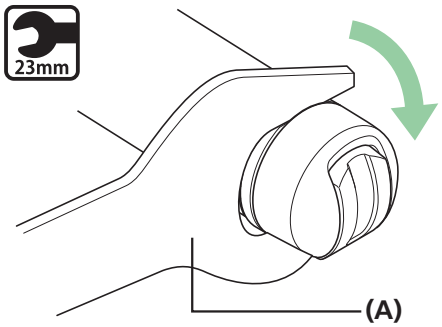

Hold the end of the shifting switch and tighten the nut part with a hub spanner.

(A) 23 mm hub spanner

Tightening torque	
23mm	1.5 N·m

NOTICE

When securing the shifting switch, make sure to tighten the nut part using a tool.
Rotating the end of the shifting switch in an attempt to tighten it will result in damage to the switch.

Example of routing the electric wire

* The illustration takes ST-R8050/SW-R610 as an example.

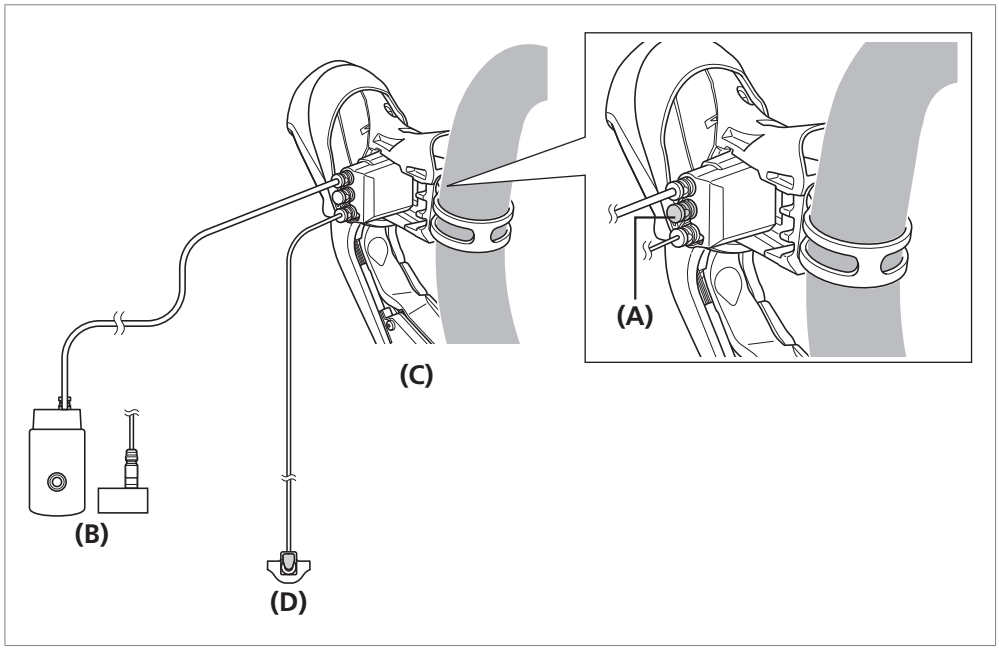

(A) Dummy plug
(B) SM-EW90/EW-RS910
(C) ST-R8050 (R)
(D) SW-R610

TECH TIPS

- This varies depending on the combination of the dual control lever and the gear-shifting switch.
  For details, refer to the electric wire wiring diagram (junction A).
- For waterproof purposes, use TL-EW02 on unused ports and install dummy plugs.

■ Installation of junction A (SM-EW90-A/B)

1

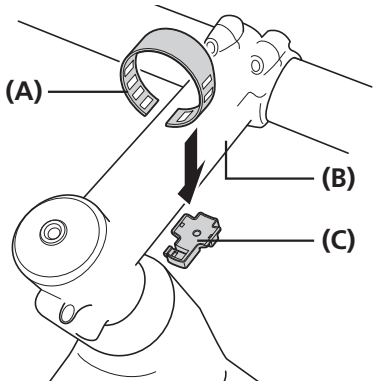

Attach to the stem using the band and hook included with SM-EW90.

(A) Band
(B) Stem
(C) Hook

2

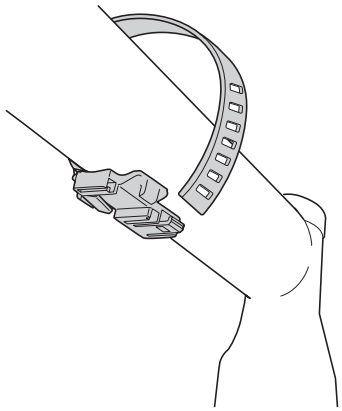

Adjust the length of the band according to the thickness of the stem.

Hook the band on the hook and wind it around the stem.

Pull on the band and make sure it is firmly attached.

3

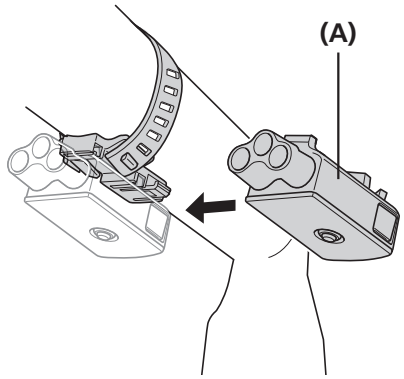

Finished image

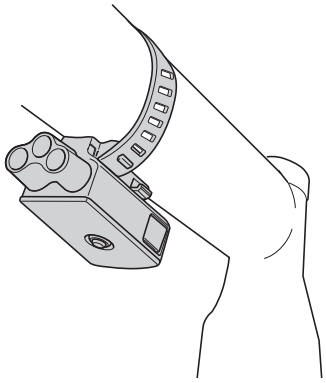

Slide SM-EW90 into the rail section of the hook to install it.

(A) SM-EW90 Junction A

TECH TIPS

Removal
Pull up the release lever to slide junction A in the direction of the arrow for removal. Forcibly pulling up the release lever may break the lever.

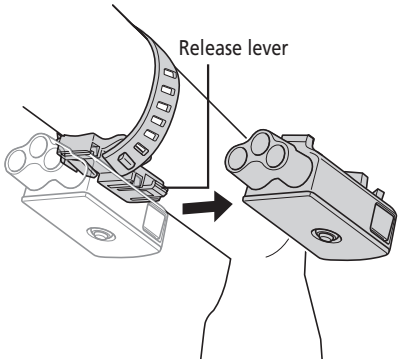

Installation of junction A (EW-RS910)

Built-in bar end type

If installing a built-in bar end type junction A, make sure to use a compatible handlebar.

1

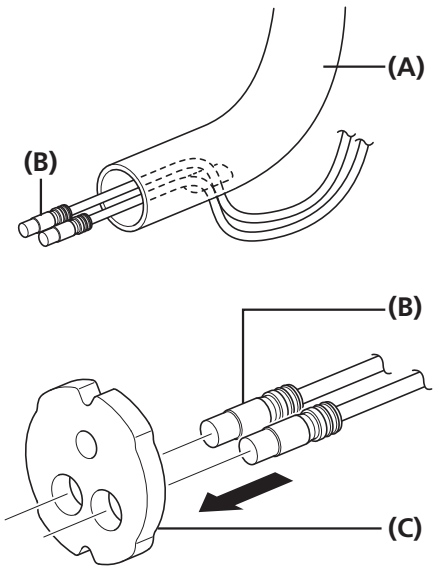

Route the electric wires through the hole in the handlebar as shown in the illustration.

Attach the wire holder to the electric wires.

(A) Handlebar
(B) Electric wire
(C) Wire holder

2

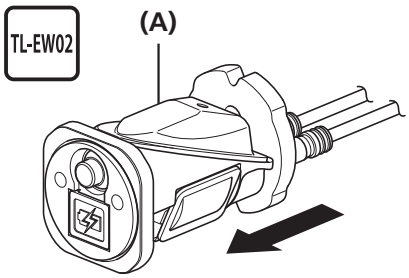

Connect the electric wires to junction A.

(A) Junction A

3

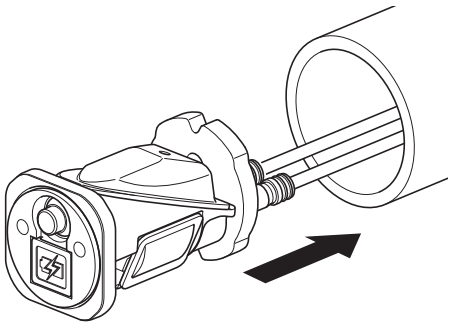

Insert junction A into the handlebar.

TECH TIPS

- Using a gentle twisting motion when inserting junction A prevents the wire holder from becoming arched outward and allows it to be inserted fully and securely.

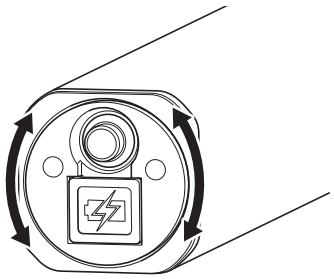

- Do not tap junction A with a soft face mallet or similar tool when inserting it.

To be continued on next page

4

Remove the release back sheet from the handle holders, and then install them to the handlebar.

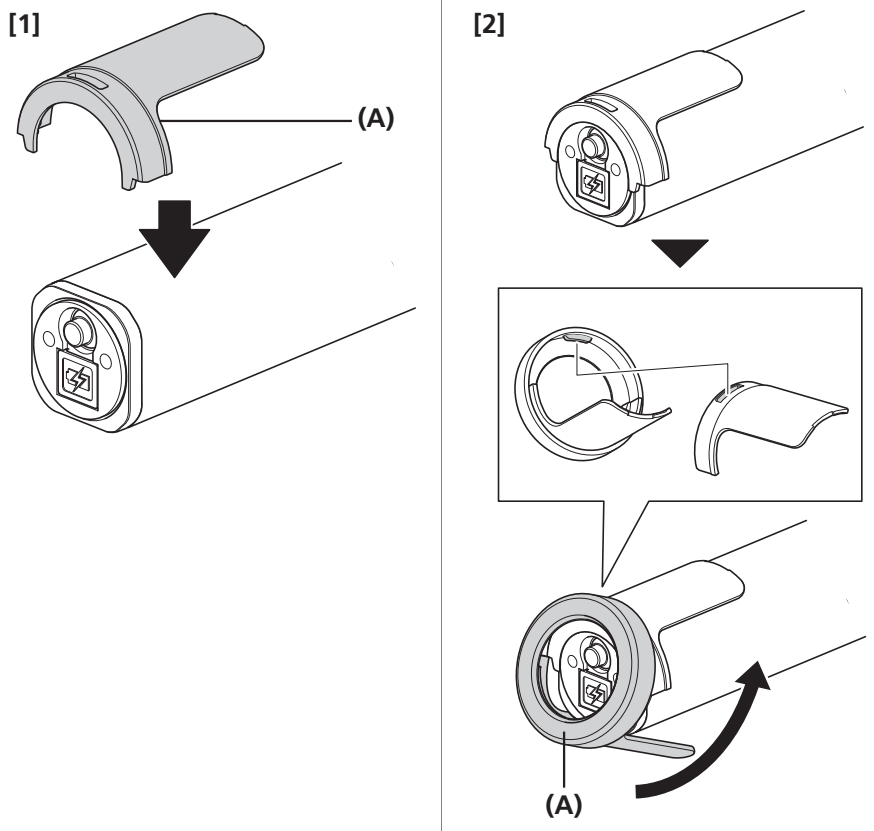

(A) Handle holder

TECH TIPS

- There are two handle holders which differ in shape.
  Attach **[1]** first and then **[2]**.

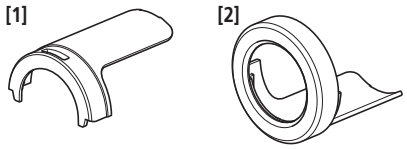

- After attaching them to the handlebar, hold down the handle holders with your finger for 1 minute.
- If the double-sided tapes have diminished in adhesive strength after replacing the handle holders etc., cut some store-bought double-sided tape and replace them.

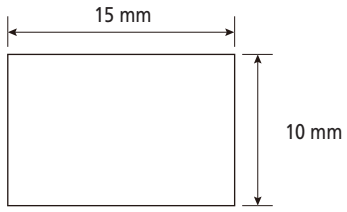

5

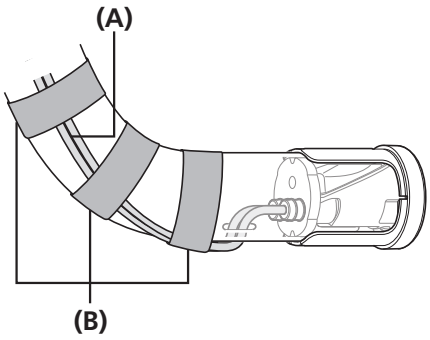

Secure the electric wires to the handlebar using tape or a similar material.

(A) Electric wire
(B) Tape

TECH TIPS

When securing the electric wires, make length adjustments by tucking any excess length into the handlebar etc.

To be continued on next page

Installation of junction A (EW-RS910)

6

Cut the end of the handlebar tape diagonally and wrap it over the handle holders as shown in the illustrations.

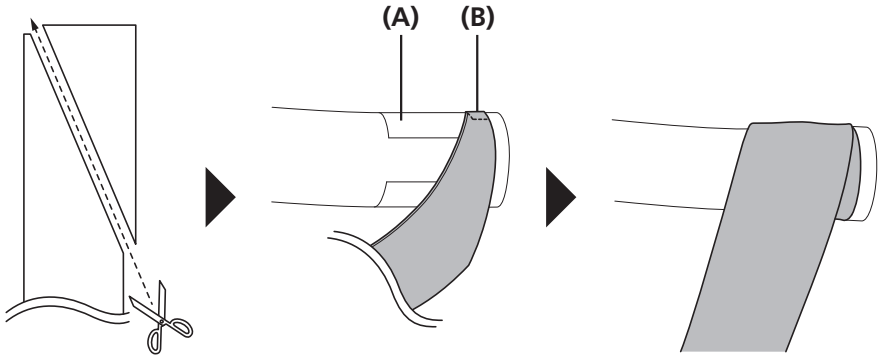

(A) Handle holder
(B) Handlebar tape

7

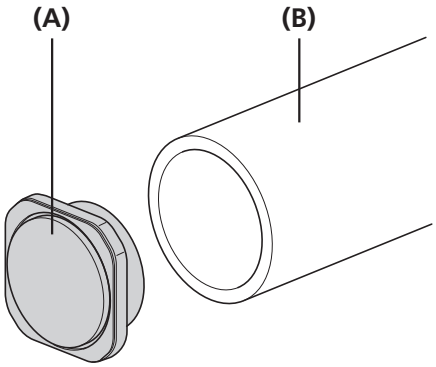

Insert the end cap into the handlebar end not fitted with junction A.

(A) End cap
(B) Handlebar

8

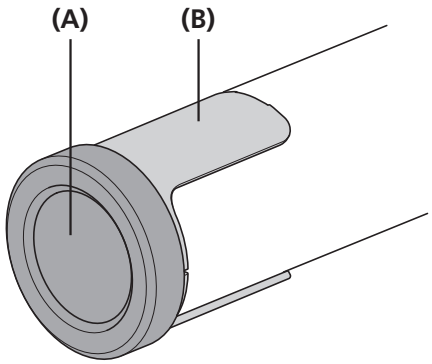

Attach the handle holders following the same steps as for the handlebar end fitted with junction A.

(A) End cap
(B) Handle holder

To be continued on next page

9

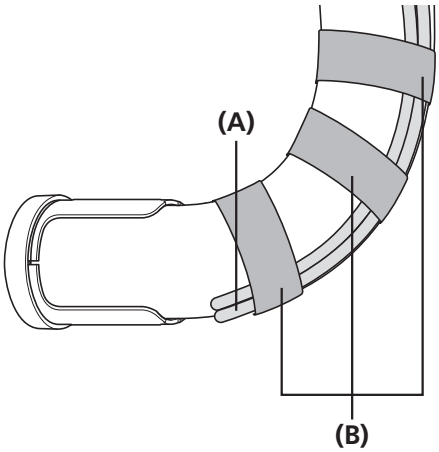

Secure the dummy wires to the handlebar using tape or a similar material.

(A) Dummy wires
(B) Tape

TECH TIPS

What are dummy wires?
Dummy wires are attached to ensure that both the handlebar end fitted with junction A and the opposing handlebar end are of the same thickness when wrapped so that discomfort is not caused to the rider when gripping the handlebars.
When securing them to the handlebar, route them in the same manner as the electric wires.

10 Affix handlebar tape following the same steps as for the handlebar end fitted with junction A.

Installation of junction A (EW-RS910)

Built-in frame type

If installing a built-in frame type junction A, make sure to use a compatible frame.

1

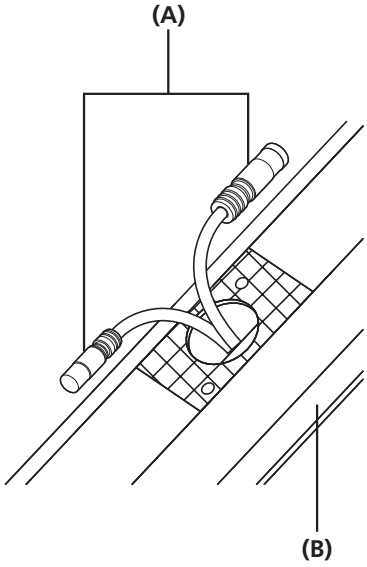

Pull out the electric wires through the hole in the frame as shown in the illustration.

(A) Electric wire
(B) Frame

2

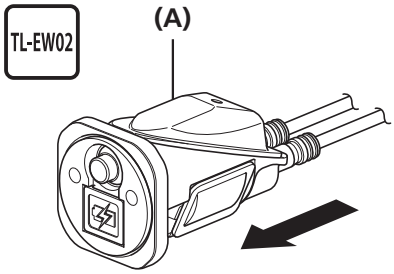

Connect the electric wires to junction A.

(A) Junction A

3

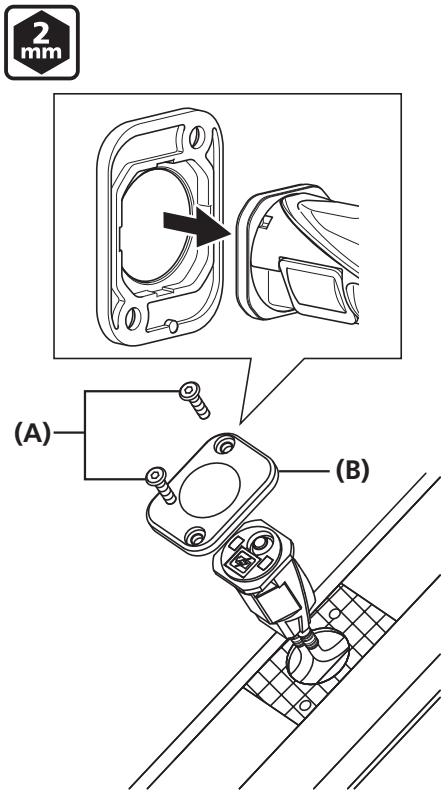

Insert junction A into the frame and attach the holder plate.

(A) Fixing bolt
(B) Holder plate

Tightening torque	
2 mm	0.26 - 0.4 N·m

■ Installation of junction B

1	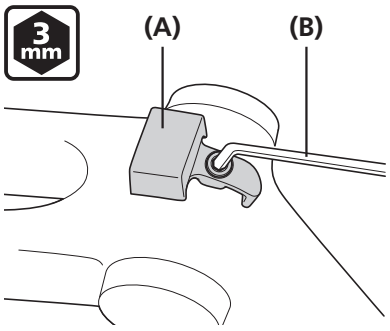	Remove the wire guide from the frame, if attached.	**(A)** Wire guide **(B)** 3 mm hexagon wrench
2	**Finished image** 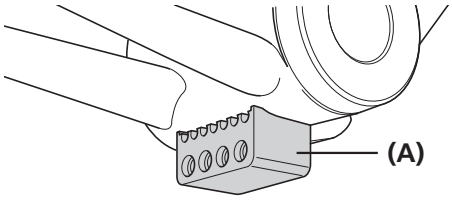	Attach junction B using the wire guide mounting hole.	**(A)** Junction B

■ Points to check before attaching the wireless unit (EW-WU111)

Before installing components, please take note of the following.

Compatible cycle computers

A D-FLY compatible cycle computer is required to use EW-WU111.
For details, refer to the manual for the cycle computer.

TECH TIPS

The types of information displayed vary by product. Refer to the manual for your cycle computer.

About wireless functions

Cycle computer connection

ANT+™ connection transmits the following four types of information to cycle computers or receivers that are compatible with ANT+™ or Bluetooth® LE connections.

(1)	Gear position (front, rear)
(2)	Di2 battery level information
(3)	Adjustment mode information
(4)	D-FLY channel switch information

For information on which of the above types of information are displayed, refer to the manual for your cycle computer or receiver.

TECH TIPS

You can check the latest functions by using E-TUBE PROJECT to update the firmware.
For details, consult the place of purchase.

E-TUBE PROJECT connection

The smartphone version of E-TUBE PROJECT Cyclist may be used if a Bluetooth® LE connection is established with a smartphone.

Attaching the wireless unit (EW-WU111)

Routing map

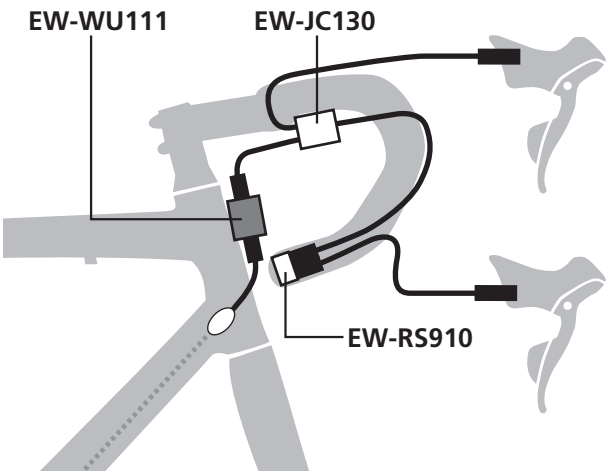

1 Connect the electric wires to the wireless unit.

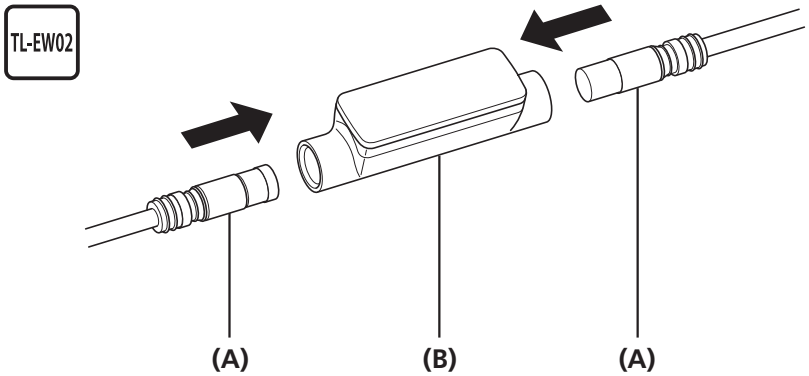

(A) Electric wire
(B) Wireless unit (EW-WU111)

NOTICE

Do not position the unit on the side of the bicycle frame, as in the illustrations.
If the bicycle collapses, damage to the unit may result if the unit is caught between the bicycle frame and curbstones etc.

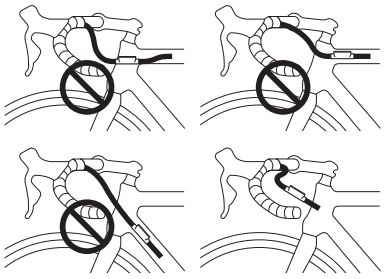

2

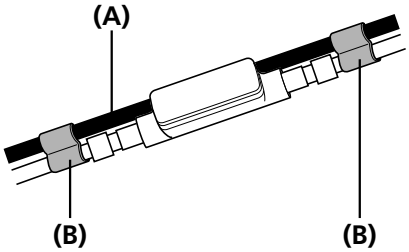

Secure the electric wires to the outer casing using the clips.

(A) Outer casing
(B) Clips

Attaching the wireless unit (EW-WU111)

How to make connections

Cycle computer connection

To make a connection, the cycle computer needs to be in connection mode. For information on how to put the cycle computer into connection mode, refer to the manual for the cycle computer.

1 Put the cycle computer into connection mode.

2 Perform gear shifting operations.
If you cannot connect after performing gear shifting operations, perform the following operations.

When using an external battery

Check that the electric wires are connected to the wireless unit, and then remove and remount the external battery.

When using a built-in battery

Check that the electric wires are connected to the wireless unit, and then remove the electric wires (two wires) from the wireless unit and reconnect them.

TECH TIPS

Connection transmission begins a few seconds after the battery is remounted or the electric wires are reconnected to the wireless unit.

3 This completes the connection process.

TECH TIPS

- Check on the cycle computer to see if connection was successful.
- If a connection cannot be made in the way described above, refer to the manual for your cycle computer.
- For information on how to show the number of gears or the Di2 battery level, refer to the manual for the cycle computer.

Attaching the wireless unit (EW-WU111)

E-TUBE PROJECT connection

Before setting up a connection, turn on Bluetooth® LE on the smartphone.

1 Open E-TUBE PROJECT and set it to listen for Bluetooth LE signals.

2

- **Setting up via the system information display**
  Press the mode switch on the system information display until "C" appears on the display.
  The unit on the bicycle will begin signal transmission. The unit name displays in E-TUBE PROJECT.

- **Setting up via junction A**
  Press the button on junction (A) until the green LED and red LED begin to blink alternately. The unit on the bicycle will begin signal transmission. The unit name displays in E-TUBE PROJECT.

3 Select the unit name displayed on screen.

TECH TIPS

- When disconnecting, cancel the Bluetooth LE connection from the smartphone.
  (The cycle computer will exit connection mode and return to regular operation mode.)

Compatibility with dual control lever (ST-R8050/ST-R8070/ST-R8071) built-in hood button

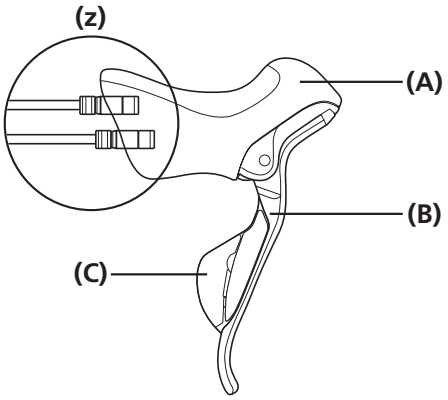

- Using the dual control lever built-in hood button in combination with EW-WU111 enables control of the D-FLY compatible cycle computer and related components.
- The dual control lever built-in hood button sends a switch signal via wireless through EW-WU111.
  Please check the instruction manuals for compatible components as functions vary depending on the component.

(z) E-TUBE port section

(A) Hood button (ST-R8050/ST-R8070/ST-R8071)
(B) Brake lever
(C) Shifting switch

■ Installing the battery

In the case of an external battery (battery: SM-BTR1 battery mount: SM-BMR1/2, BM-DN100)

Installing the battery mount

1

Set the battery mount into position.

Use the bottle cage fixing bolt to temporarily install the battery mount onto the bottom of the bottle cage.

Short type

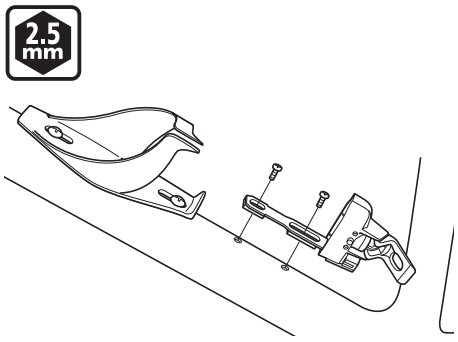

Use the included M4 screws to secure the short type.

Long type

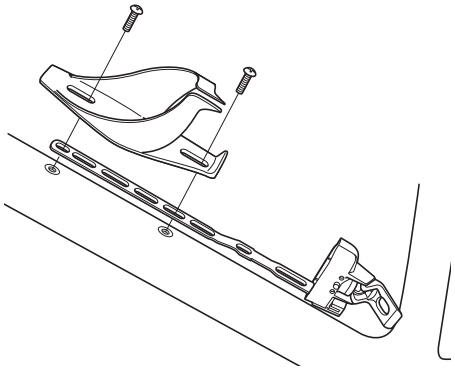

For the long type, secure it with the bolts supplied with the frame or the bottle cage.

Refer to the Service Instructions for the bottle cage for details on the tightening torques.

Short type Tightening torque	
2.5 mm	1.2 - 1.5 N·m

2

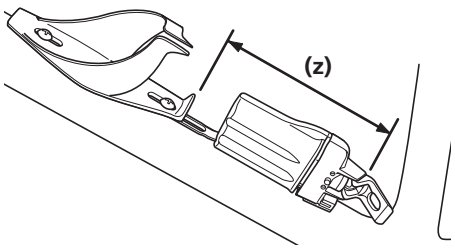

Leave a space of 108 mm or more at the end of the battery mount.

Check that the battery can be inserted and removed while the bottle cage is installed.

(z) 108 mm

To be continued on next page

3

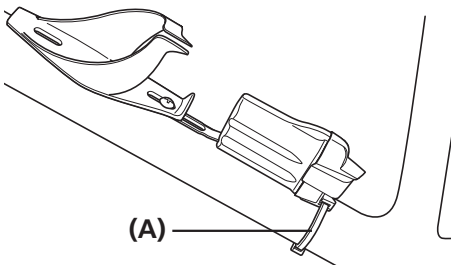

Tighten the bolt of the bottle cage to secure the battery mount.

For the long type, use the accessory zip tie to secure the battery mount to the frame.

(A) Zip tie

TECH TIPS

If there is a mounting boss on the frame
If there is a mounting boss on the frame, the battery mount can be secured to the frame with a bolt.

2 mm Battery mount mounting bolt (M4×15 mm)

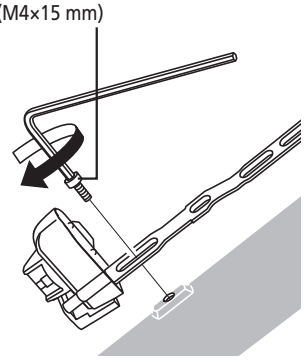

Tightening torque	
2 mm	1.2 - 1.5 N·m

Installation of the electric wire covers

1

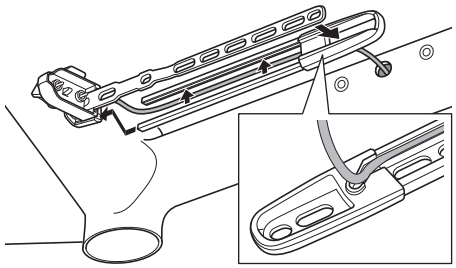

Set the electric wire for the battery mount into the groove in the electric wire cover for the battery mount.

2

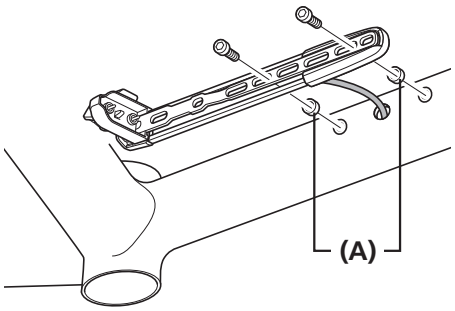

Place the accessory spacers in between the battery mount and the frame and then secure them by tightening the bolts.

(A) Spacer

TECH TIPS

- If installing the bottle cage, it is easier to install it at this stage.
- Refer to the Service Instructions for the bottle cage for details on the tightening torques.

3

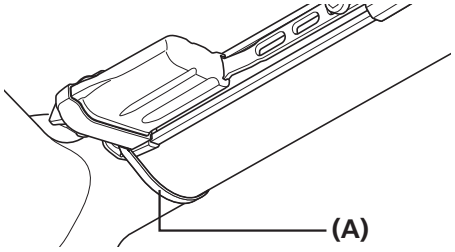

Use the accessory zip tie to secure the battery mount to the frame.

(A) Zip tie

TECH TIPS

If there is a mounting boss on the frame
If there is a mounting boss on the frame, the battery mount can be secured to the frame with a bolt.

2 mm Battery mount mounting bolt (M4×15 mm)

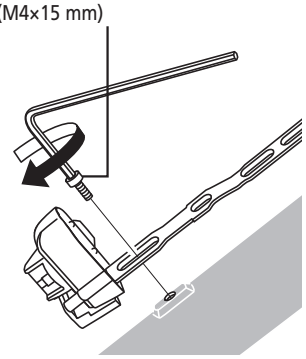

Tightening torque	
2 mm	1.2 - 1.5 N·m

Installation of the bottle cage adapter

If the bottle cage which is installed to the seat tube interferes with the battery, move the position of the bottle cage upward.

The installation position for the bottle cage can be moved upward by a minimum of 32 mm and a maximum of 50 mm from the original installation position.

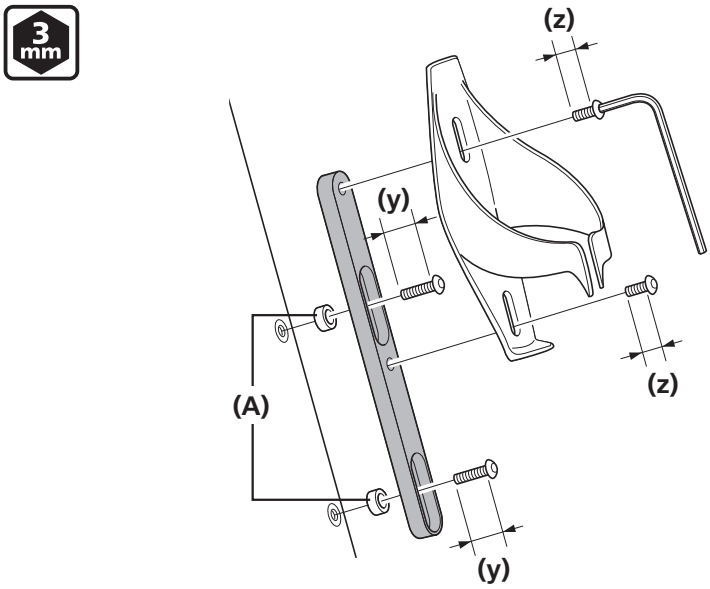

(y) 15 mm
(z) 10 mm

(A) Spacer

Tightening torque	
3 mm	3 N·m

TECH TIPS

- If it interferes with the mounting boss for the front derailleur, use the included spacer.
- Refer to the Service Instructions for the bottle cage for details on the tightening torques.

Built-in battery (SM-BTR2/BT-DN110/BT-DN110-A)

Installing the battery

1

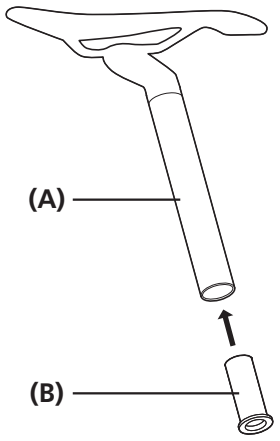

Insert the seat post collar into the seat post.

(A) Seat post
(B) Seat post collar

TECH TIPS

- Depending on the type of frame, the way the lithium ion battery (built-in type) is installed may differ. For details, contact a manufacturer of completed bicycles.
- Prepare a seat post that is compatible with Di2 (SM-BTR2/BT-DN110/BT-DN110-A).

* If you have any questions, consult with the manufacturer of seat post.

2

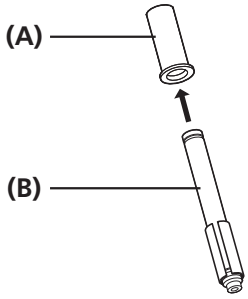

Insert internal battery into the collar from the bottom of seat post.

(A) Seat post collar
(B) Built-in battery (SM-BTR2/BT-DN110/BT-DN110-A)

3

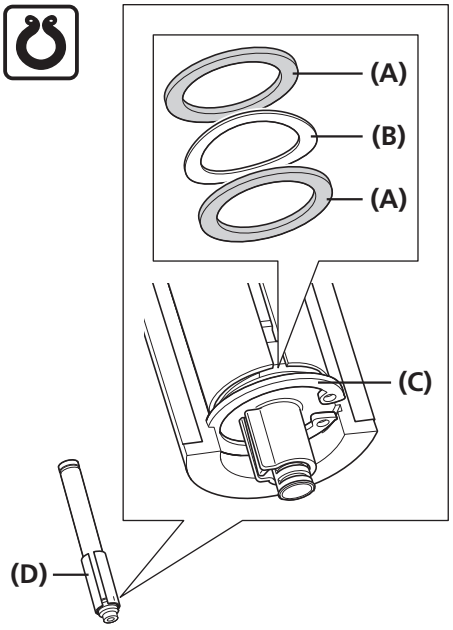

Mount a wave washer between two washers to the groove of the battery adapter, and fix them in place with a snap ring.

(A) Washer
(B) Wave washer
(C) Snap ring
(D) Battery adapter

TECH TIPS

- This procedure is for when installing the battery into the seat post. Depending on the frame, the way the battery is installed may differ. For details, consult with the manufacturer of completed bicycles.
- Use snap ring pliers (with a claw diameter of 2.0 mm or less) to mount the snap ring.

INSTALLATION OF HYDRAULIC DISC BRAKE SYSTEM

ST-R8070
ST-R8071

BR-R8070

SM-RT800

List of tools to be used when installing hydraulic disc brake system

INSTALLATION OF HYDRAULIC DISC BRAKE SYSTEM

This section covers details relating to the installation of the hydraulic disc brake system only.
For details on the connection and adjustment of electric wires, refer to the relevant sections.

■ List of tools to be used when installing hydraulic disc brake system

Tools listed here are required when installing the hydraulic disc brake system.
Other tools are listed in the section "LIST OF TOOLS TO BE USED".

Tool		Tool		Tool	
2 mm	2 mm hexagon wrench	7mm	7 mm box wrench		Funnel adapter
4 mm	4 mm hexagon wrench	0.8×4	Slotted screwdriver (nominal dia. 0.8 × 4)	TL-BH61	TL-BH61
5 mm	5 mm hexagon wrench		Adjustable wrench	TL-BH62	TL-BH62
8mm	8 mm spanner		Utility knife	TL-LR15	TL-LR15
SM-DISC	SM-DISC (Oil funnel and oil stopper)	TL-BT03	TL-BT03/TL-BT03-S		Micrometer

Installation of the disc brake rotor

Center lock type

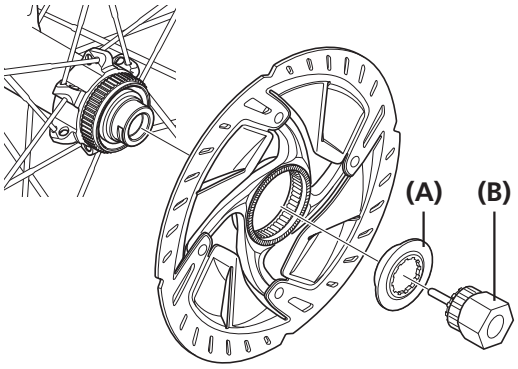

	Internal spline type
Disc brake rotor fixing lock ring	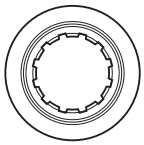
Lock ring tightening tool	TL-LR15 Adjustable wrench

(A) Disc brake rotor fixing lock ring
(B) Lock ring tightening tool

Tightening torque	
	40 - 50 N·m

Installation of the brake hose

1

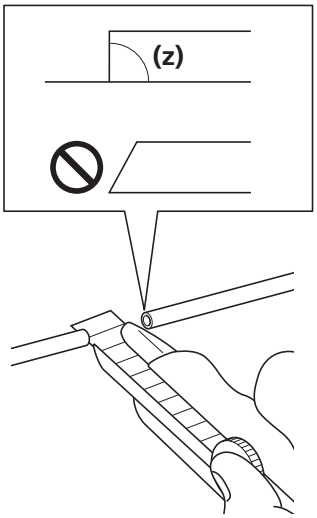

Use a utility knife or other cutting tool to cut the brake hose.

(z) 90°

NOTICE

Use the utility knife safely and correctly in accordance with its instruction manual.

TECH TIPS

If you are using TL-BH62, refer to the Service instruction accompanying the product.

To be continued on next page

2

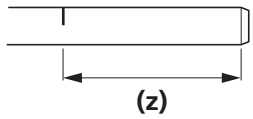

Put a mark on the brake hose beforehand as shown in the illustration so that you can check if the ends of the brake hose are secured to the hose mounts of the brake caliper and the dual control lever.
(As a guide, the length of the portion of the brake hose that is inside the mount is approximately 15 mm.)

(z) 15 mm

3

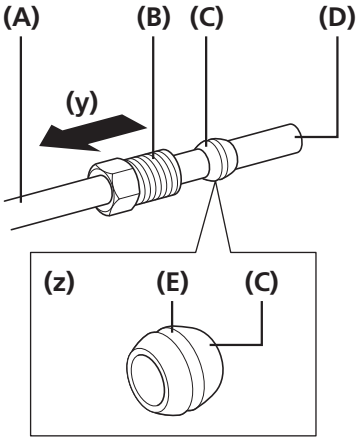

ST-R8070

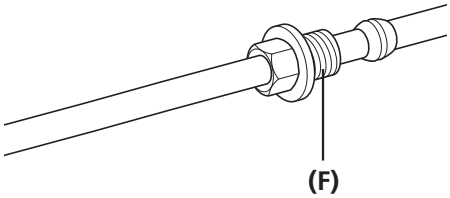

BR-R8070

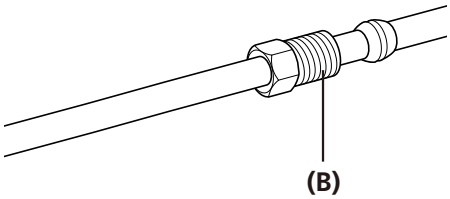

Pass the brake hose through the flare nut and olive as shown in the figure.

(y) Direction of insertion

(z) Grease the outside of the olive.

(A) Brake hose
(B) Flare nut
(C) Olive
(D) Cut end
(E) Grease
(F) Flare nut with flange

NOTICE

- When installing to a built-in type frame, make sure to first pass the lever end of the brake hose through the caliper end of the frame.
- For ST-R8070, use a flare nut with flange.
- The length of the BR-R8070 flare nut is as shown below.
  When installing, be sure to do so correctly.

  BR-R8070: 13.8 mm

To be continued on next page

4

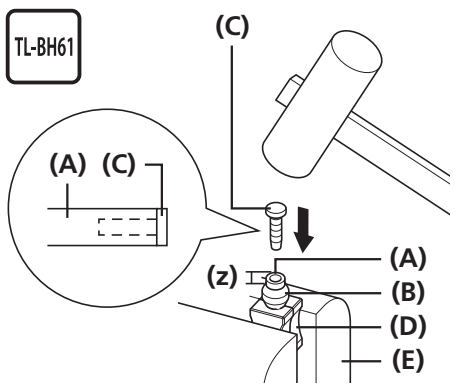

Use a tapered tool to smooth out the inside of the cut end of the brake hose, and mount the connector insert.

Connect the brake hose to TL-BH61 and secure TL-BH61 in a vise, as shown in the illustration.

Then, hammer down the connector insert until the connector insert mount comes into contact with the end of the brake hose.

(z) SM-BH90-JK-SSR: 1 mm

(A) Brake hose
(B) Olive
(C) Connector insert
(D) TL-BH61
(E) Vise

NOTICE

If the end of the brake hose is not in contact with the connector insert mount, the brake hose may be disconnected or cause fluid leaks.

5

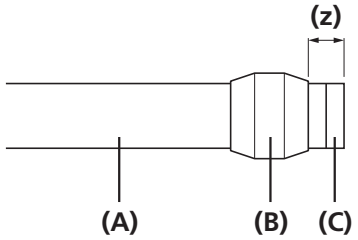

After checking that the olive is positioned as shown in the illustration, grease the screw threads of the flare nut.

(z) 2 mm

Model No.	Length	Color
SM-BH90-JK-SSR	11.2 mm	Silver

(A) Brake hose
(B) Olive
(C) Connector insert

NOTICE

Use the dedicated connector insert supplied with SM-BH90-JK-SS.
Use of any connector insert other than the one supplied may produce a loose assembly, leading to oil leaks or other problems.

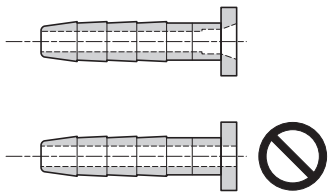

To be continued on next page

Installation of the brake hose

6

Make sure that the brake hose is not twisted.

Make sure that the brake calipers and dual control levers are in the positions shown in the illustrations.

ST-R8070/BR-R8070

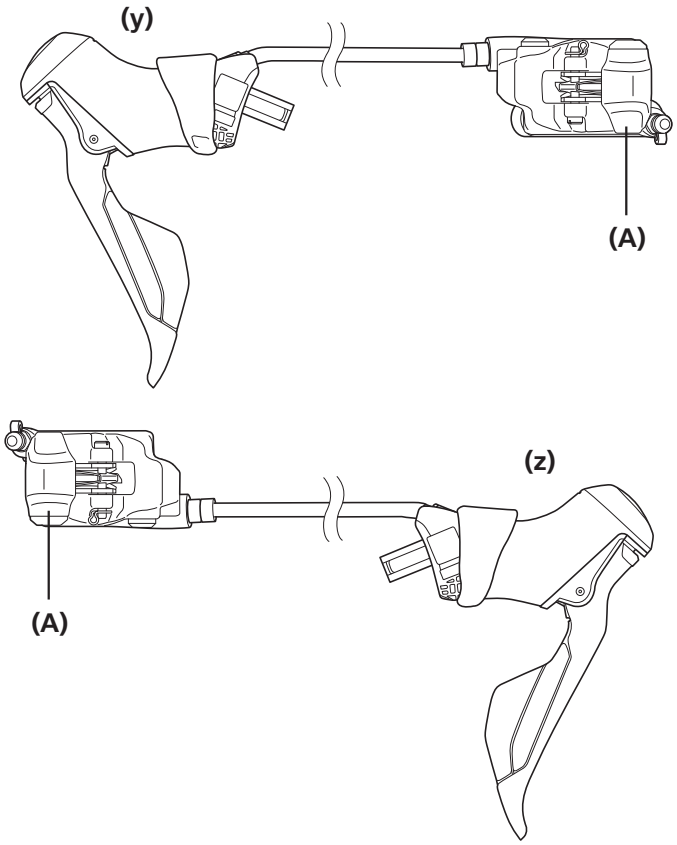

(y) Left lever

(z) Right lever

(A) Brake caliper

To be continued on next page

7

ST-R8070

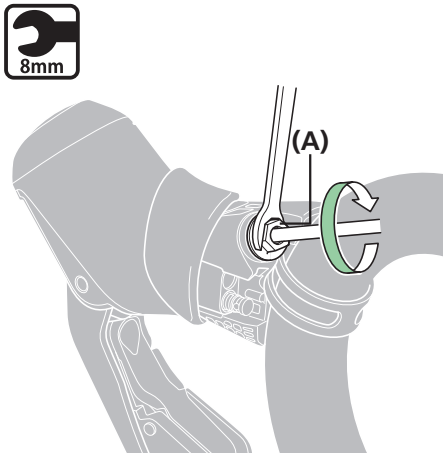

Secure the dual control lever to the handlebar or in a vise and insert the brake hose straight.

Tighten the flare nut with flange with a spanner while pushing the brake hose.

(A) Flare nut
(For ST-R8070 use a flare nut with flange)

Tightening torque	
8mm	5 - 6 N·m

NOTICE

- At this point, make sure the brake hose is straight when pushing.

ST-R8070

- When installing the brake hose with the dual control lever secured to the handlebar, adjust the angle of the bracket to make it easier to turn the spanner.
  Be careful not to damage the handlebar and other parts when doing so.

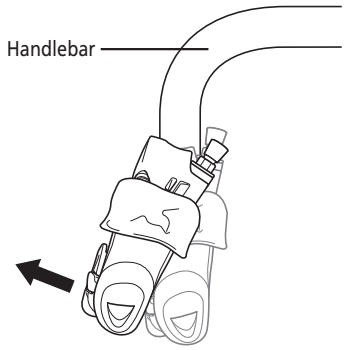

8

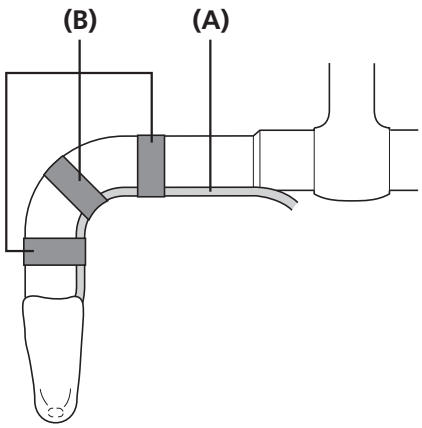

Temporarily secure the brake hose to the handlebar (by using tape or similar material).

(A) Brake hose
(B) Tape

Installing the brake hose (ST-R8071)

End of the brake hose on the brake caliper side

Attach the connector insert to the brake hose.

Then, tighten the flare nut to the caliper while pushing the brake hose.

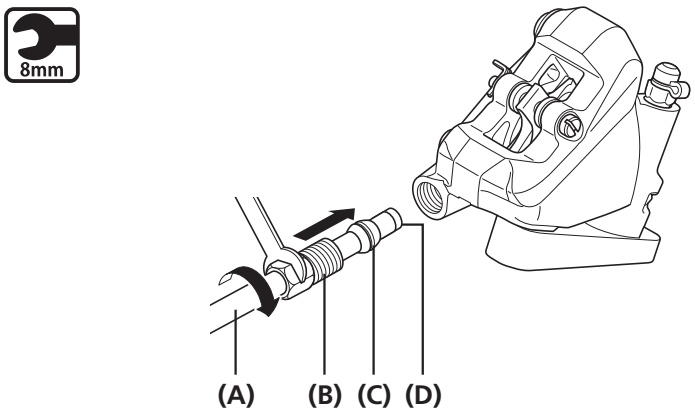

(A) Brake hose
(B) Flare nut
(C) Olive
(D) Connector insert

Tightening torque	
8mm	5 - 7 N·m

■ Installing the brake hose (ST-R8071)

For details on how to install the brake hose for ST-R8071, click here (https://si.shimano.com/dm/RADBR10/install_brake_hose_RA).

Installation of the brake hose (easy hose joint system)

■ Installation of the brake hose (easy hose joint system)

This section covers procedures for cutting and adjusting the lengths of easy hose joint system brake hoses.
If length adjustment of a brake hose is not necessary, it is not necessary to follow procedures relating to cutting the brake hose.

ST-R8070

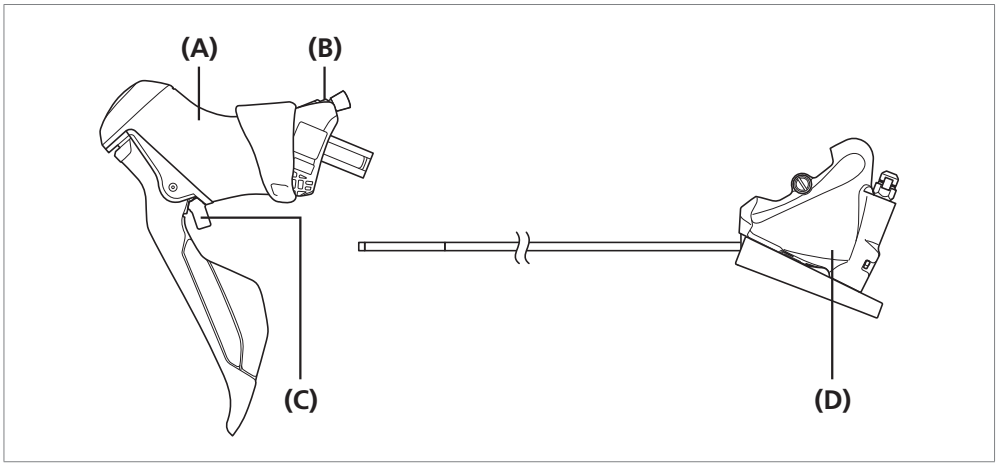

(A) Dual control lever
(B) Joint sleeve
(C) Lever stopper
(D) Brake caliper

1 Pass the brake hose through each hole in the built-in frame.

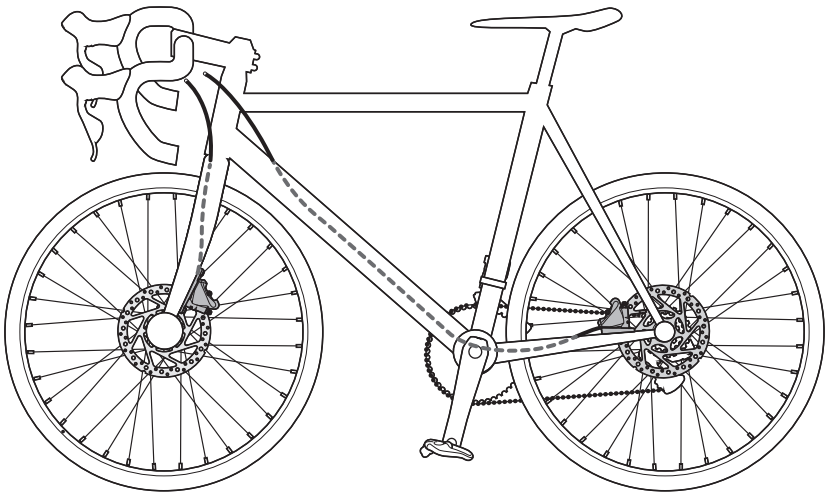

NOTICE

- The illustration is a rough image.
  For details on routing the brake hoses, consult the manufacturer of the completed bicycle or refer to the instruction manual for the bicycle.
- When bleeding the brake caliper, SM-DISC (oil funnel and oil stopper) and the funnel adapter are required.

To be continued on next page

Installation of the brake hose (easy hose joint system)

2

Secure the dual control levers in the installation positions to be used when riding.

Check the appropriate length for each brake hose by running the brake hose along the handlebar as in the following illustration.

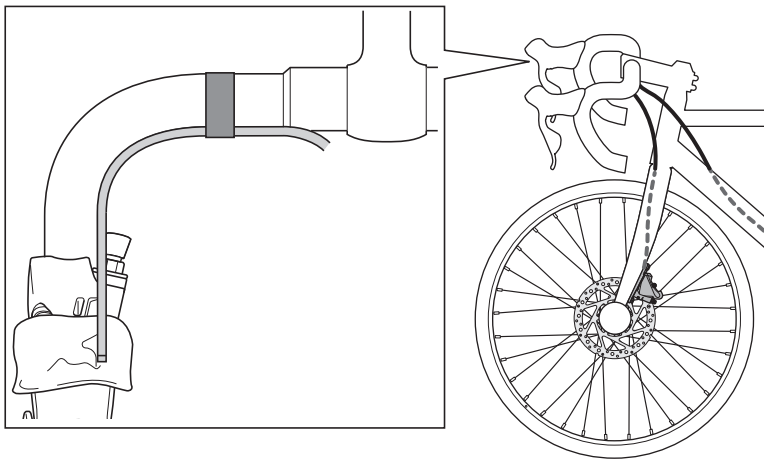

TECH TIPS

When checking the appropriate lengths for the brake hoses, use the head of the flare nut on the dual control lever as a guideline.

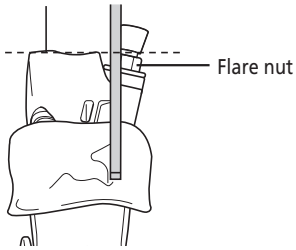

3

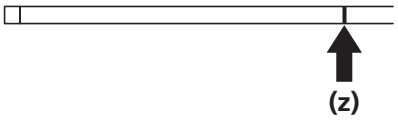

When the appropriate length has been determined, mark the brake hose.

(z) Mark

NOTICE

Easy hose joint system brake hoses are pre-marked.
If it is not necessary to cut the brake hose in order to adjust its length, it is not necessary to mark the hose.

4

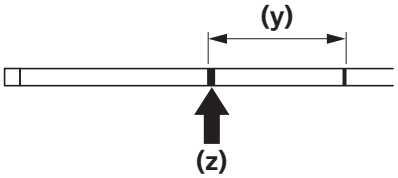

Mark the brake hose again 21 mm away from the first mark to indicate where the brake hose should be cut.

(y) 21 mm

(z) Mark for cutting

To be continued on next page

Installation of the brake hose (easy hose joint system)

5

Orient the brake hose connection port of the dual control lever securely upward by changing the angle of the handlebars or another means.

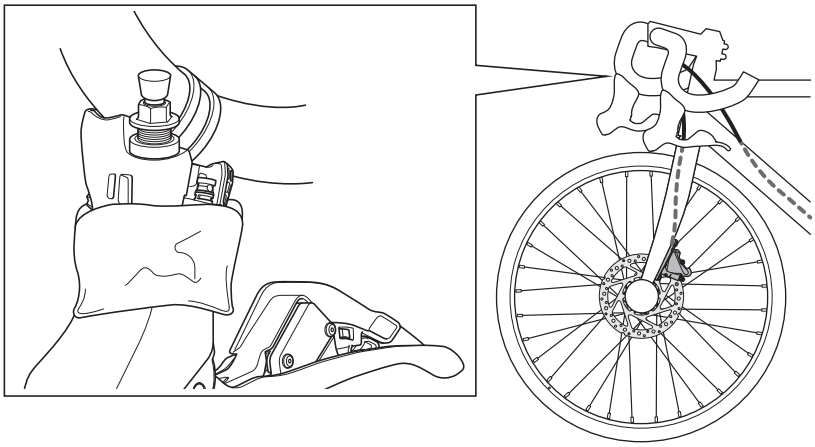

NOTICE

When installing the brake hose with the dual control lever secured to the handlebar, adjust the angle of the bracket to make it easier to turn the spanner.
Be careful not to damage the handlebar and other parts when doing so.

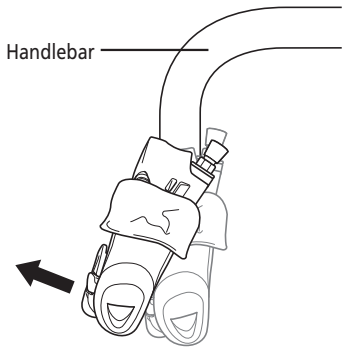

6

Prepare tool TL-BH62 for the cutting of the brake hose.

Disassemble TL-BH62 as shown in the figure below.

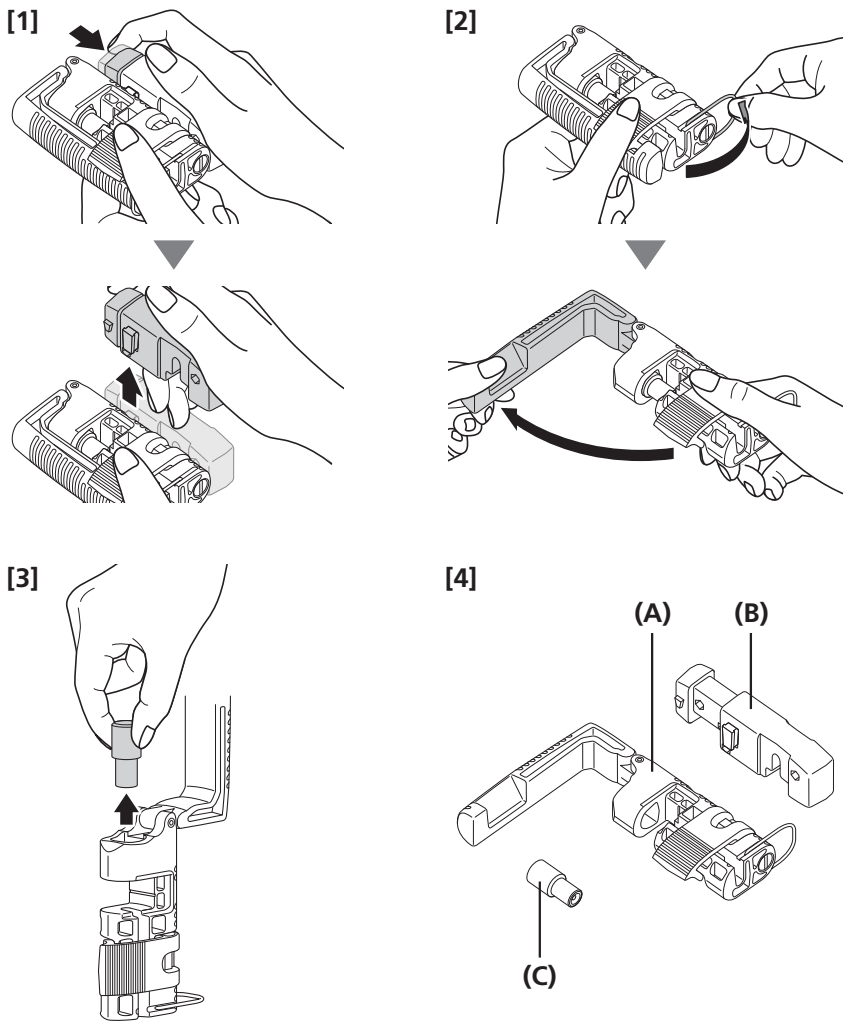

(A) Body of tool
(B) Hose cutter
(C) Press block

NOTICE

- Do not move the lever indicated in the figure before disassembling TL-BH62.

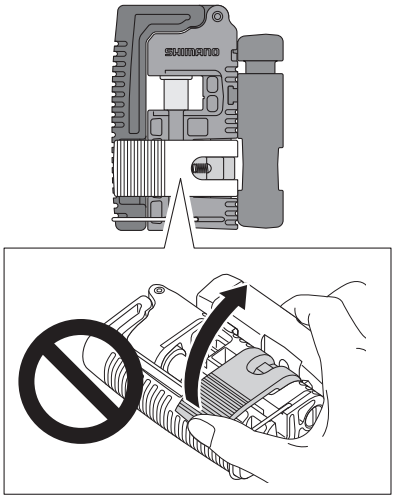

- Make sure to also refer to the manual for TL-BH62.

To be continued on next page

7

Insert the brake hose into the tool as shown in the illustration.

Check the location of the mark for cutting and secure the brake hose in place.

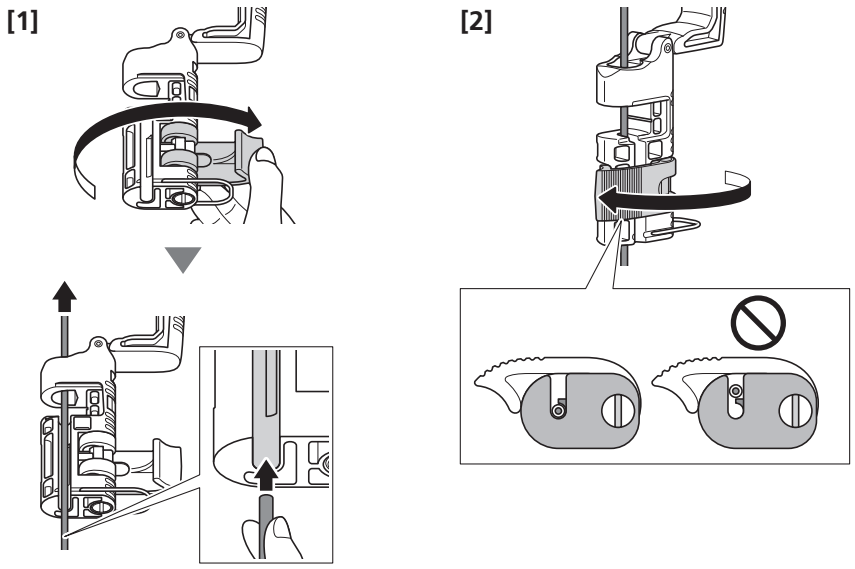

NOTICE

When inserting the brake hose into the tool, align the mark for cutting with the groove in the tool.

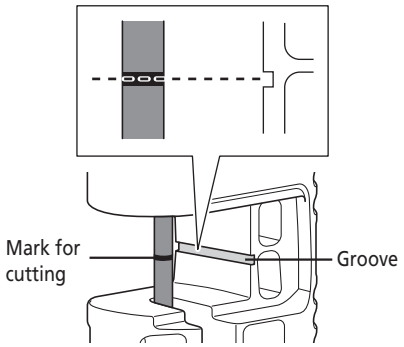

8

Check that the hose is secure and then attach the hose cutter.

Press the hose cutter as shown in illustration **[2]** to cut the brake hose.

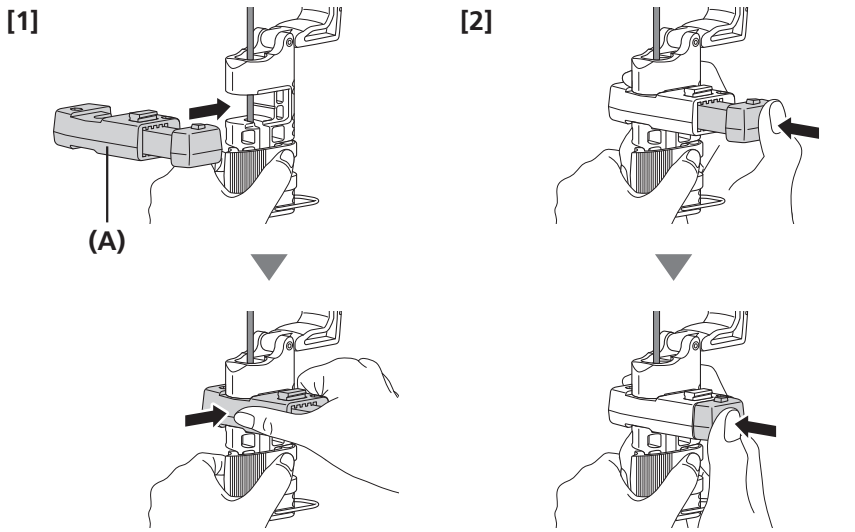

(A) Hose cutter

9

Detach the hose cutter and check that the cut end is horizontal.

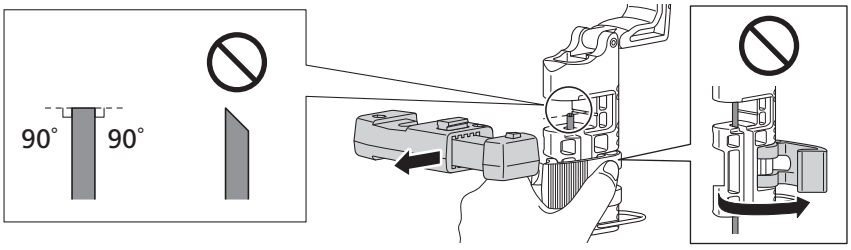

To be continued on next page

10

Prepare the connector insert for insertion into the brake hose as follows.

Attach the connector insert to the press block and then set the press block in the tool.

Make sure that the tip of the connector insert is correctly positioned inside the opening of the brake hose.

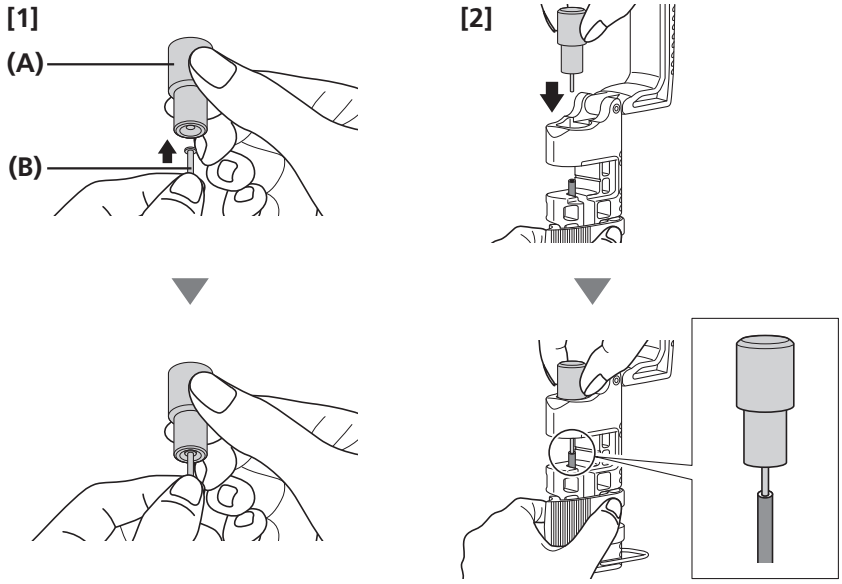

(A) Press block
(B) Connector insert

11

Grip the lever on the tool to insert the connector insert into the brake hose, as shown in the illustrations.

Check that the connector insert has been inserted correctly, and then remove the brake hose from the tool.

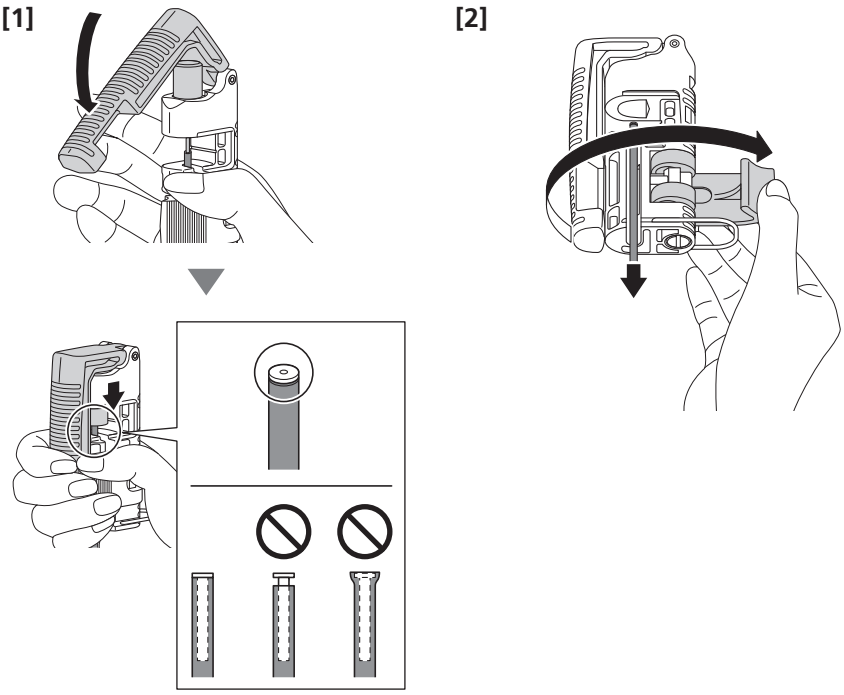

To be continued on next page

12

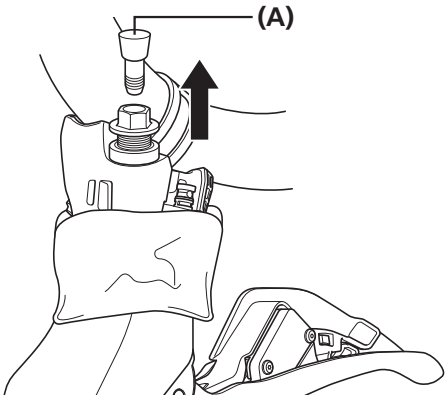

Remove the seal plug.

(A) Seal plug

NOTICE

Cover the seal plug with a clean rag as the oil applied to the seal plug may leak.

13

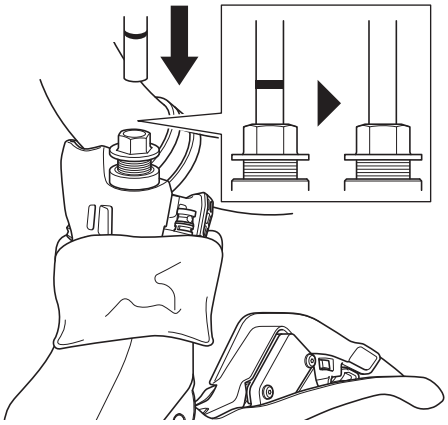

Insert the brake hose into the joint component until the mark on the hose is hidden.

TECH TIPS

- It comes with a built-in olive. Insert it while making sure that it will not get snagged on the olive.
- Check that the brake hose is inserted until the line printed on it or the mark made previously are hidden.
- Use a clean rag when inserting the brake hose as some oil inside may leak.

14

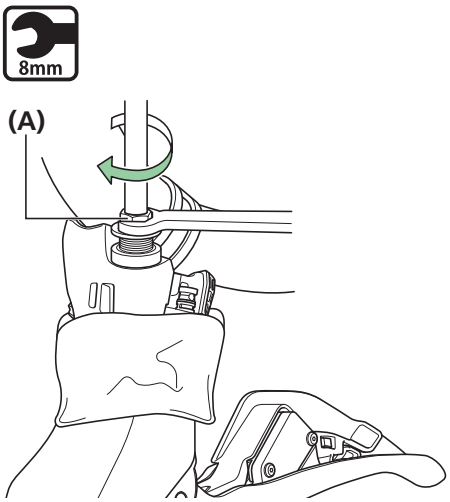

Tighten the flare nut with flange with an 8 mm spanner while pushing in the brake hose.

Then, wipe off any oil residue.

(A) Flare nut with flange

Tightening torque	
8mm	5 - 6 N·m

NOTICE

Make sure that the brake hose is inserted properly and the flare nut is tightened correctly.
Oil leakage or inadequate braking power may result.

To be continued on next page

15

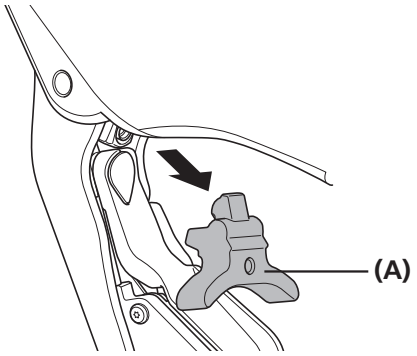

Remove the brake lever stopper.

(A) Lever stopper

NOTICE

After removing the lever stopper, check that the pad spacer is installed on the caliper side or that the caliper is installed to the bicycle and the disc brake rotor is between the two sides of the caliper, before depressing the lever.
After installation to the bicycle, make sure to check that the lever stopper is removed.

TECH TIPS

Move and pull on the lever stopper to remove it while being careful not to depress the lever.

16

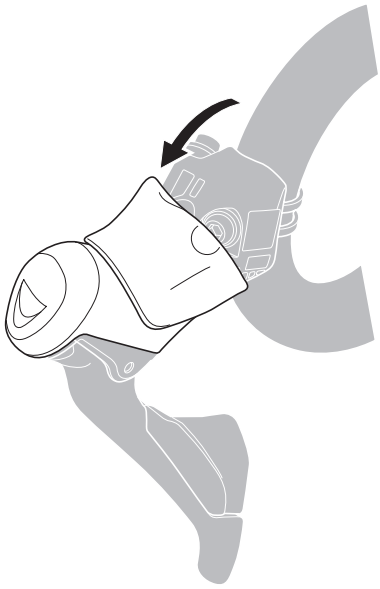

Turn over the bracket cover from the back side.

17

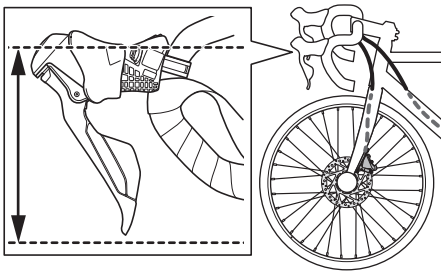

Adjust the position of the bleed screw so that its surface is parallel to the ground.

NOTICE

When tilting, be careful not to forcibly pull on the brake hose or electric wires.

To be continued on next page

18

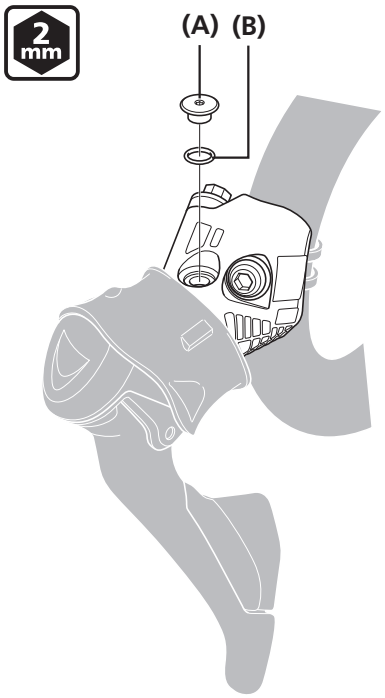

Remove the bleed screw and O-ring.

(A) Bleed screw
(B) O-ring

NOTICE

Be careful not to drop the bleed screw and O-ring.

19

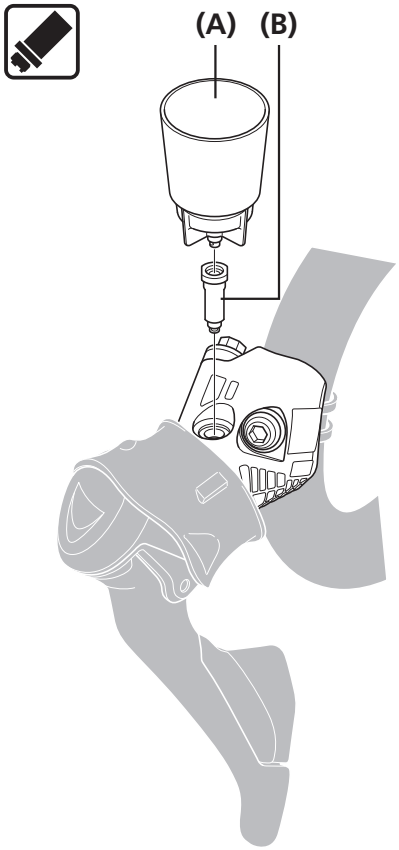

Attach the funnel adapter to the oil funnel.

(A) Oil funnel
(B) Funnel adapter

To be continued on next page

Installation of the brake hose (easy hose joint system)

20

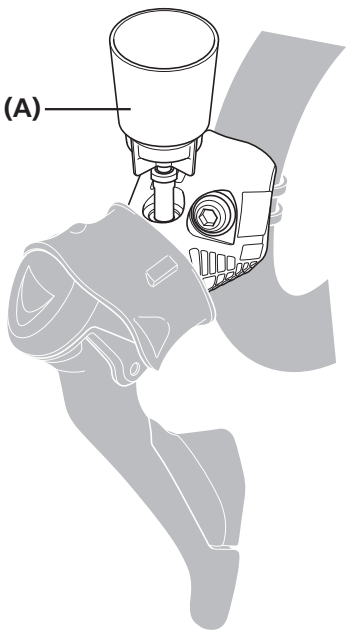

Mount the oil funnel.

(A) Oil funnel

21

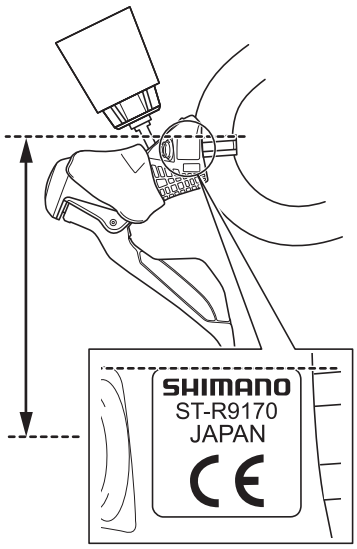

Make adjustments, such as changing the angle of the handlebar, so that the side of the bracket indicated in the illustration is parallel to the ground.

NOTICE

When tilting, be careful not to forcibly pull on the brake hose or electric wires.

22 Secure the brake caliper in a vise while bleeding.

23

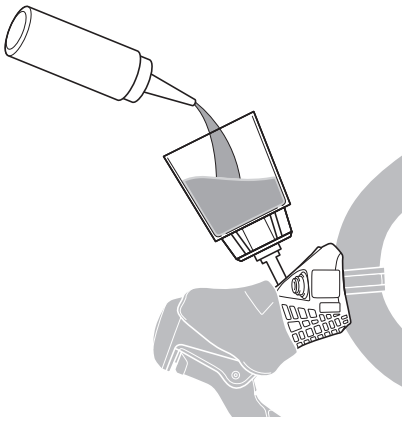

Fill the oil funnel with oil.

To be continued on next page

24

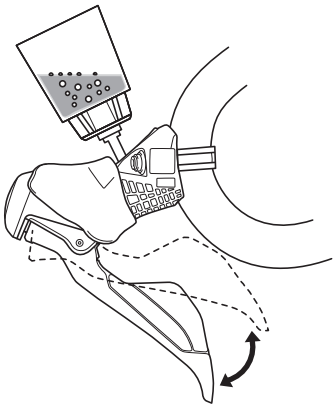

Slowly apply and release the lever until no more air bubbles are emitted.

25

If the brake lever is then operated, air bubbles in the system will rise up through the port into the oil funnel.

Once the bubbles stop appearing, depress the brake lever as far as it will go.

Under the normal condition, the lever action should feel stiff at this point.

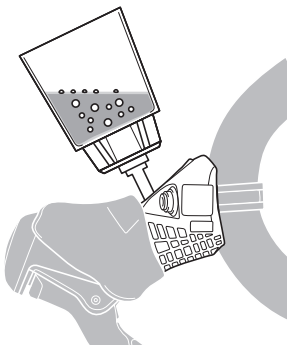

Lever operation

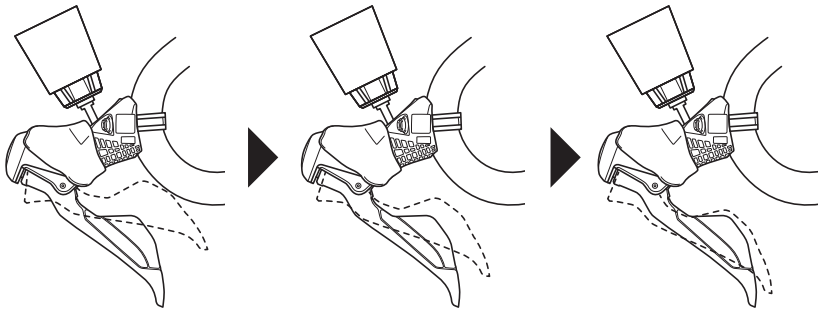

(x) **(y)** **(z)**

(x) Loose
(y) Slightly stiff
(z) Stiff

To be continued on next page

Installation of the brake hose (easy hose joint system)

26

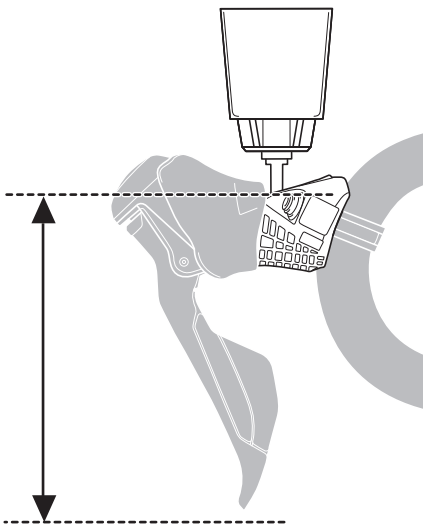

Make adjustments, such as changing the angle of the handlebar, so that the head of the bleed screw is parallel to the ground.

27

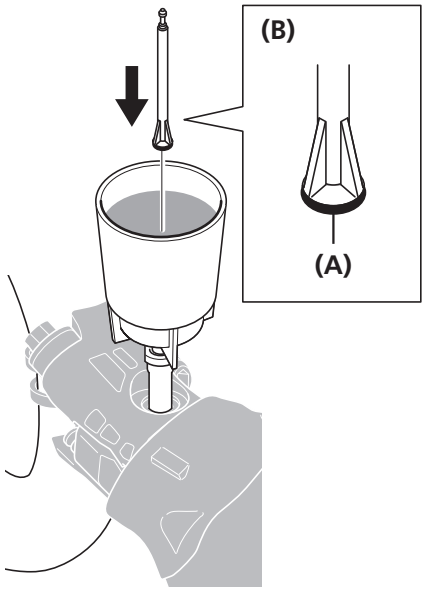

Plug the oil funnel with the oil stopper so that the O-ring mounted side is facing downward.

(A) O-ring
(B) Oil stopper

28

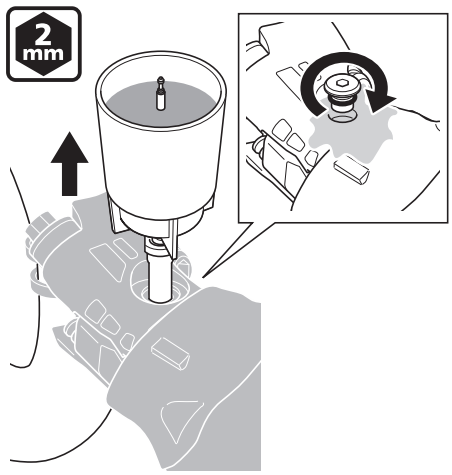

Remove the oil funnel and funnel adapter while still plugged with the oil stopper.

Attach the O-ring to the bleed screw and tighten it while letting oil flow out so as to make sure that no air bubbles remain inside the reservoir tank.

Tightening torque	
2 mm	0.5 - 0.7 N·m

NOTICE

- Do not operate the brake lever. Otherwise, air bubbles may enter the cylinder.
- Use a clean rag to prevent the oil from flowing to surrounding areas.

To be continued on next page

Installation of the brake hose (easy hose joint system)

29	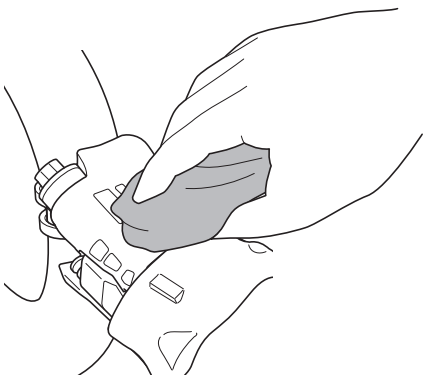	Wipe away any oil which has flowed out.

ST-R8071

For details on the installation of the brake hose (easy hose joint system) for ST-R8071, click here (https://si.shimano.com/dm/RADBR10/install_brake_hose_easy_joint_system).

■ Installation to the handlebar

ST-R8070/ST-R8071

1

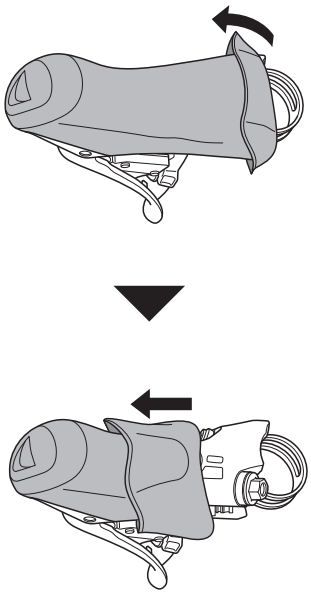

Turn over the bracket cover from the back side.

Gently turn over the ends of the bracket cover with both hands and slowly push them down.

NOTICE

Forcibly pulling it may cause damage to the bracket cover because of its material properties.

2

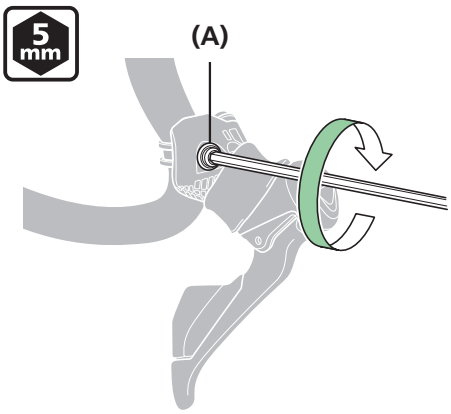

Use a 5 mm hexagon wrench to loosen the clamp bolt at the upper section of the bracket then tighten it after setting it on the handlebar.

(A) Clamp bolt

Tightening torque	
5 mm	6 - 8 N·m

NOTICE

When mounting the shift lever to a drop handlebar, loosen the clamp bolt sufficiently. Otherwise, the handlebar may be damaged.

■ Adding SHIMANO hydraulic mineral oil and bleeding air

ST-R8070

With the bleed spacer (yellow) attached to the brake caliper, place the bicycle in the work stand as shown in the illustration.

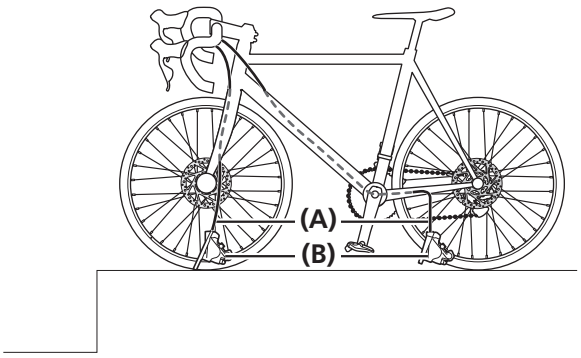

(A) Brake hose
(B) Brake caliper

NOTICE

When bleeding the brake caliper, SM-DISC (oil funnel and oil stopper) and the funnel adapter are required.

1

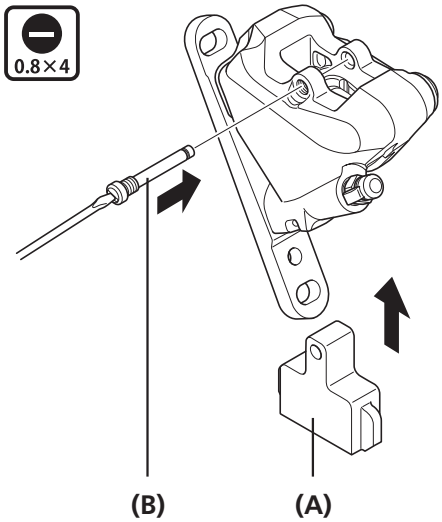

Mount the bleed spacer (yellow).

(A) Bleed spacer
(B) Pad axle

Tightening torque	
0.8×4	0.1 - 0.3 N·m

To be continued on next page

2

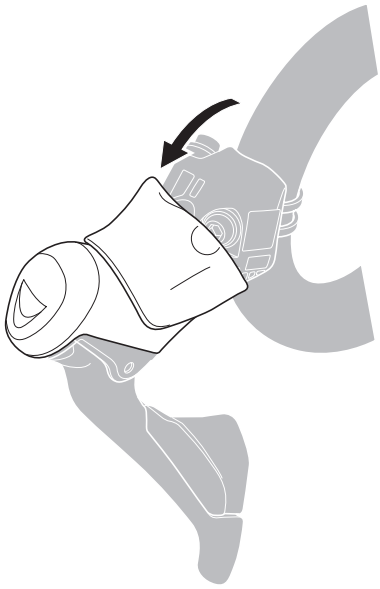

Turn over the bracket cover from the back side.

3

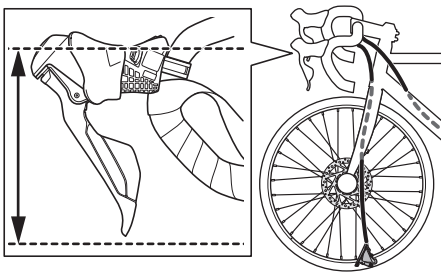

Adjust the position of the bleed screw so that its surface is parallel to the ground.

NOTICE

When tilting, be careful not to forcibly pull on the brake hose or shifting cable.

4

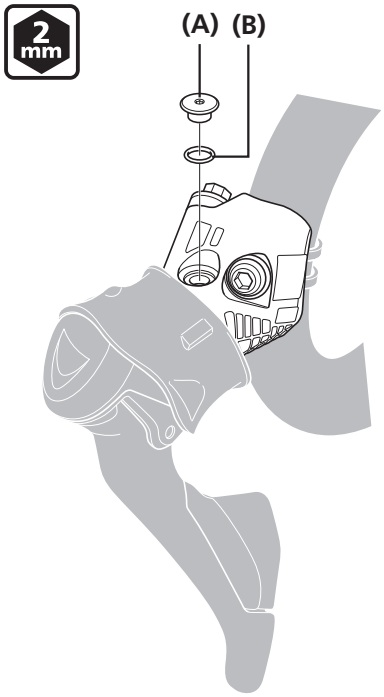

Remove the bleed screw and O-ring.

(A) Bleed screw
(B) O-ring

NOTICE

Be careful not to drop the bleed screw and O-ring.

To be continued on next page

5

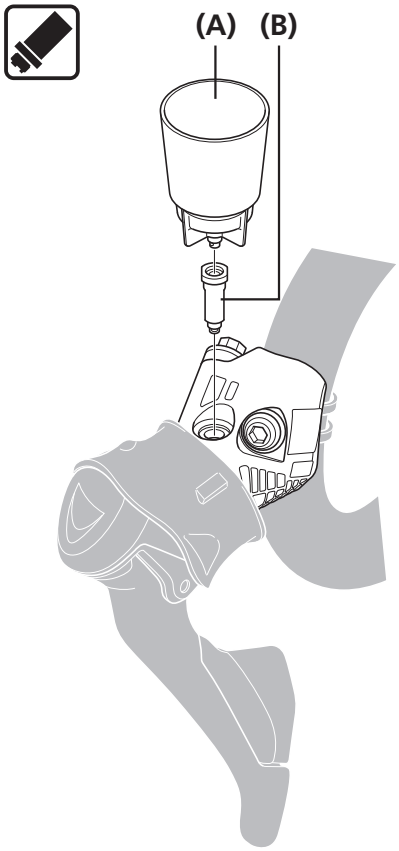

Attach the funnel adapter to the oil funnel.

(A) Oil funnel
(B) Funnel adapter

6

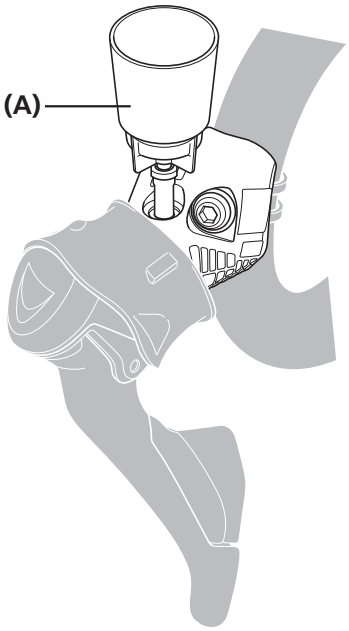

Mount the oil funnel.

(A) Oil funnel

7 Secure the brake caliper in a vise while bleeding.

To be continued on next page

8

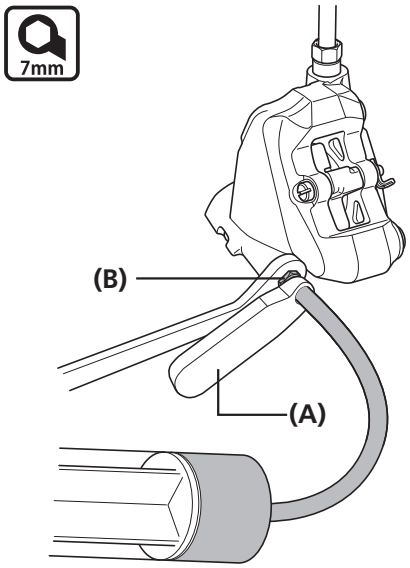

Set a 7 mm box wrench in place.

Fill the syringe with sufficient oil, connect the syringe tube to the bleed nipple, and fasten it with the tube holder so that the tube will not be disconnected.

Loosen the bleed nipple by a 1/8 of a turn to open it.

(A) Tube holder
(B) Bleed nipple

NOTICE

Secure the brake caliper in a vise to prevent the tube from being accidentally disconnected.
Do not depress and release the lever repeatedly.
Oil without air bubbles may come out as a result of such operation, but air bubbles may remain in the oil inside the brake caliper, and it will take longer to bleed the air. (If you have depressed and released the lever repeatedly, drain out all of the oil and then add oil again.)

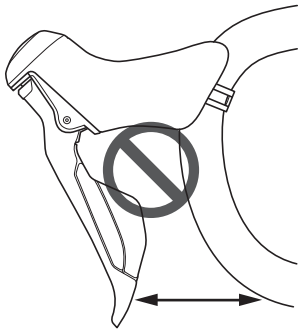

9

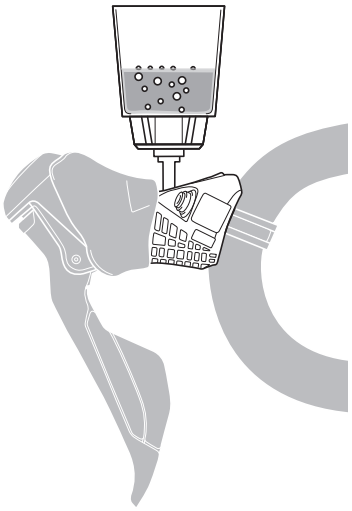

Once there are no more air bubbles in the oil in the funnel, temporarily close the bleed nipple.

Remove the syringe while covering the end of the syringe tube with a clean rag to prevent oil from spattering.

To be continued on next page

10

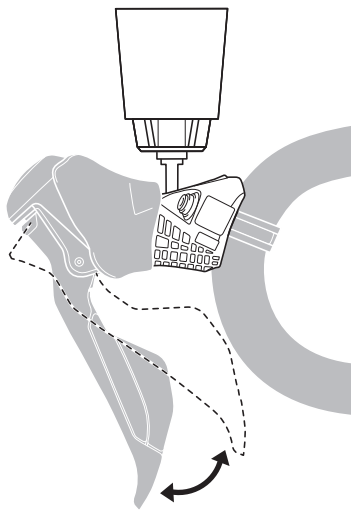

Operate the brake lever about 10 times.

11

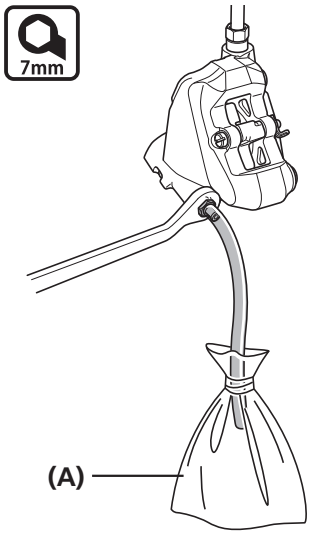

Tie the supplied tube and bag with rubber bands.

Set a 7 mm box wrench as shown in the illustration, and connect the tube to the bleed nipple.

(A) Bag

12

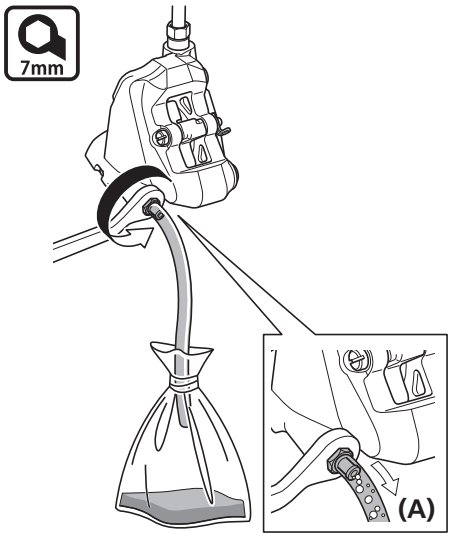

Loosen the bleed nipple.

At this point, make sure that the tube is secured to the bleed nipple.

After a little while, the oil and air bubbles will flow naturally from the bleed nipple into the tube.

In this way it will be possible to easily extract the greater part of the air bubbles remaining inside the brake system.

(A) Air bubbles

TECH TIPS

It may be effective to shake the brake hose gently, to tap the lever bracket or brake calipers gently with a screwdriver, or to move the position of the calipers at this time.

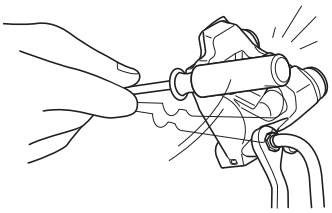

To be continued on next page

13

The level of liquid inside the oil funnel drops at this time, so keep filling the funnel with oil to maintain the level of liquid so that air is not drawn in.

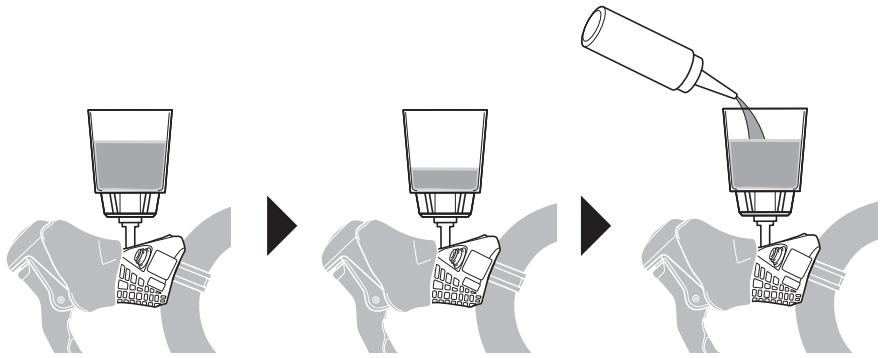

14

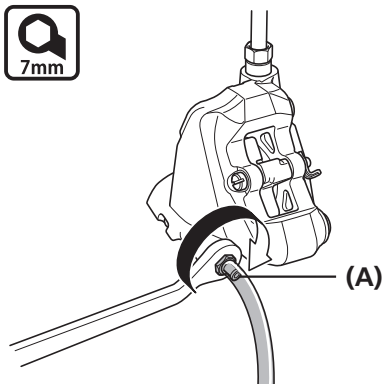

Once no more air bubbles come from the bleed nipple, temporarily close the bleed nipple.

(A) Bleed nipple

15

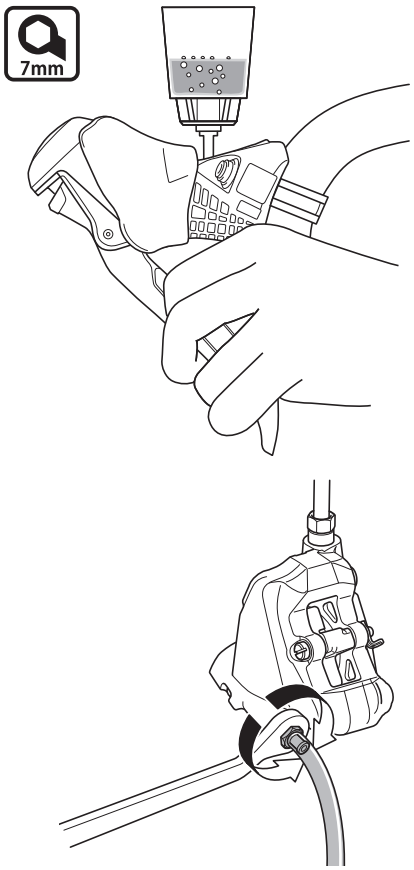

With the brake lever depressed, open and close the bleed nipple in rapid succession (for approximately 0.5 seconds each time) to release any air bubbles which may be in the brake calipers.

Repeat this procedure about 2 to 3 times.

To be continued on next page

16

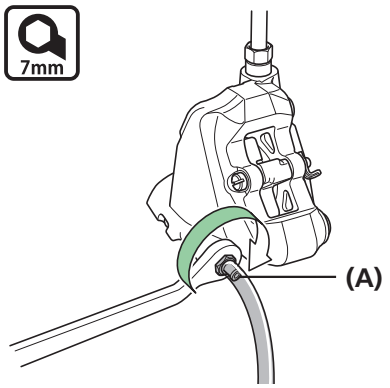

Tighten the bleed nipple.

(A) Bleed nipple

Tightening torque	
7mm	4 - 7 N·m

17

Make adjustments, such as changing the angle of the handlebar, so that the side of the bracket indicated in the illustration is parallel to the ground, and slowly apply and release the lever until no more air bubbles are emitted.

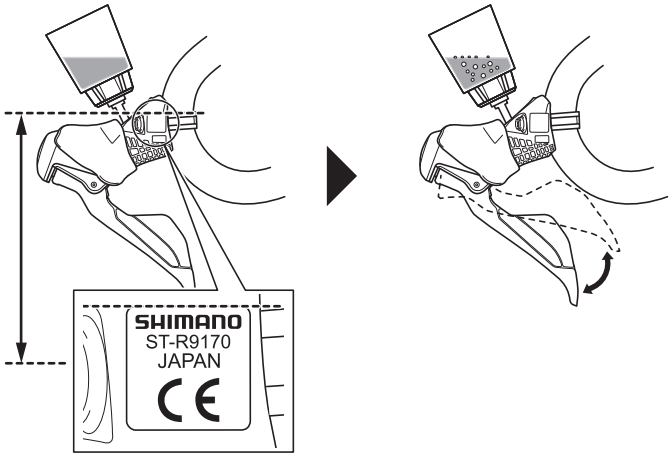

To be continued on next page

18

If the brake lever is then operated, air bubbles in the system will rise up through the port into the oil funnel.

Once the bubbles stop appearing, depress the brake lever as far as it will go.

Under the normal condition, the lever action should feel stiff at this point.

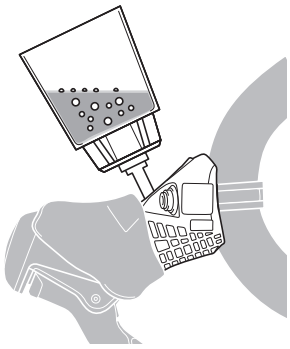

Lever operation

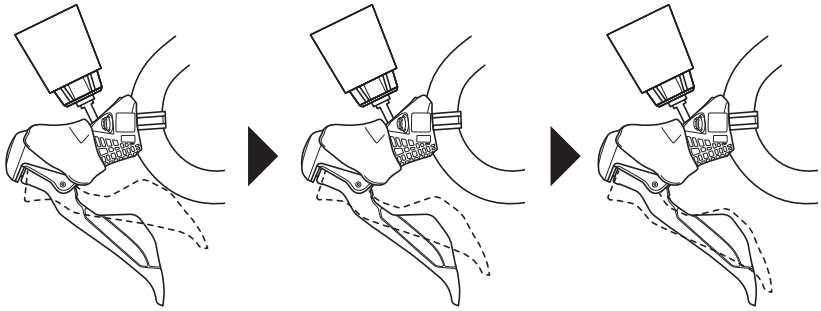

(x) (y) (z)

(x) Loose
(y) Slightly stiff
(z) Stiff

19

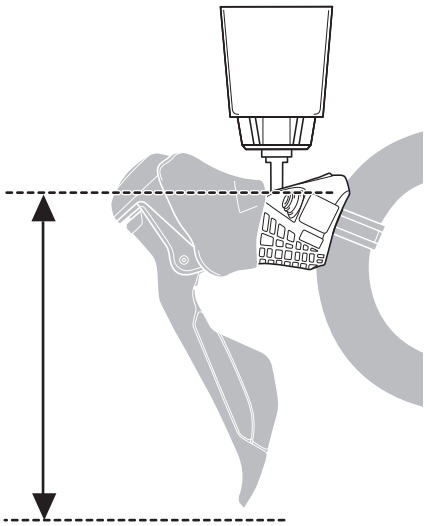

Make adjustments, such as changing the angle of the handlebar, so that the head of the bleed screw is parallel to the ground.

To be continued on next page

Adding SHIMANO hydraulic mineral oil and bleeding air

20

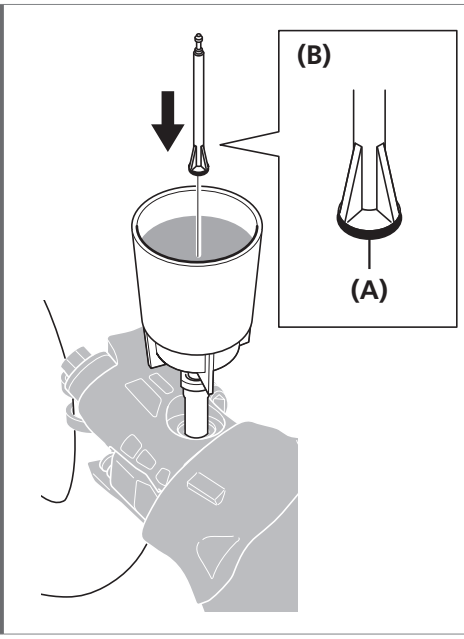

Plug the oil funnel with the oil stopper so that the O-ring mounted side is facing downward.

(A) O-ring
(B) Oil stopper

21

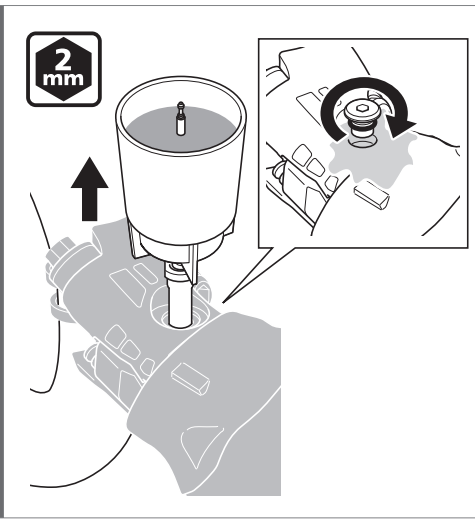

Remove the oil funnel and funnel adapter while still plugged with the oil stopper.

Attach the O-ring to the bleed screw and tighten it while letting oil flow out so as to make sure that no air bubbles remain inside the reservoir tank.

Tightening torque	
2 mm	0.5 - 0.7 N·m

NOTICE

- Do not operate the brake lever. Otherwise, air bubbles may enter the cylinder.
- Use a clean rag to prevent the oil from flowing to surrounding areas.

22

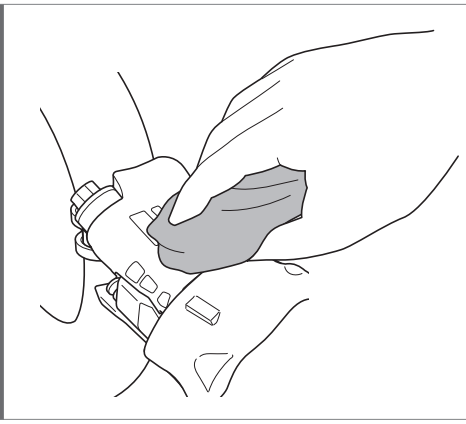

Wipe away any oil which has flowed out.

ST-R8071

For details on adding SHIMANO hydraulic mineral oil and bleeding air for ST-R8071, click here (https://si.shimano.com/dm/RADBR10/replace_genuine_mineral_oil).

■ Installing the brake caliper

1

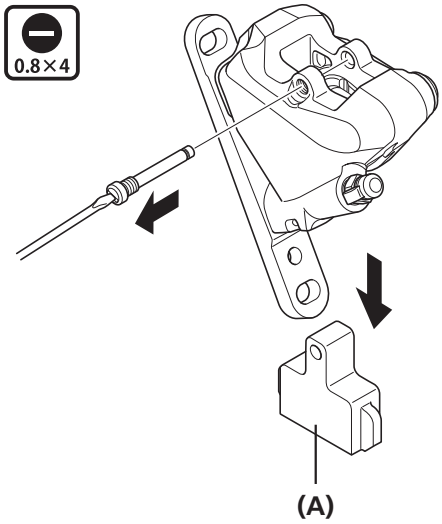

Remove the bleed spacer (yellow).

(A) Bleed spacer

2

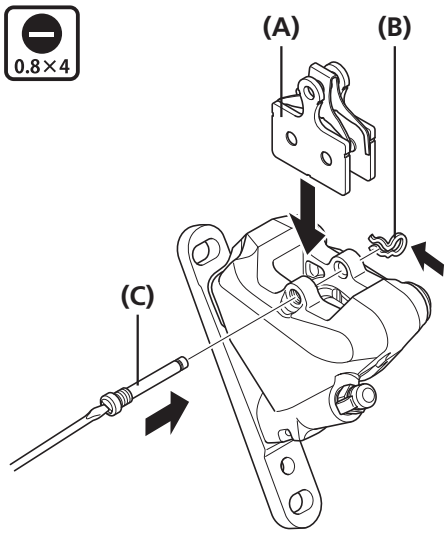

Install the new brake pads and bolts.

At this point, make sure to install the retaining clip as well.

Install the pads as shown in the illustration.

(A) Brake pads
(B) Retaining clip
(C) Pad axle

Tightening torque	
0.8×4	0.1 - 0.3 N·m

NOTICE

When using a pad with fins, take note of the left (L) and right (R) markings to set it.

TECH TIPS

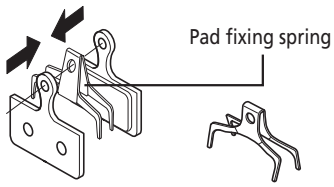

Install the pad fixing spring as shown in the illustration.

Checking the caliper fixing screw C length

Rear (same for both 140 mm and 160 mm)

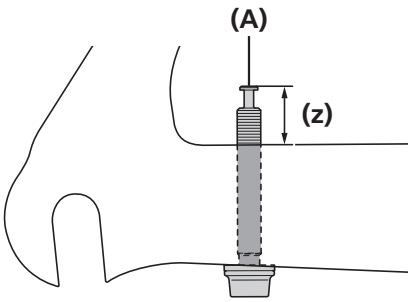

Insert the brake caliper mounting bolts C into the frame mount area, and make sure that the lengths of the protruding sections of the bolts are 13 mm.

(z) 13 mm

(A) Brake caliper mounting bolt C

NOTICE

- When using a bolt length selector, make sure the tip of the brake caliper mounting bolt C is within the range **A**.

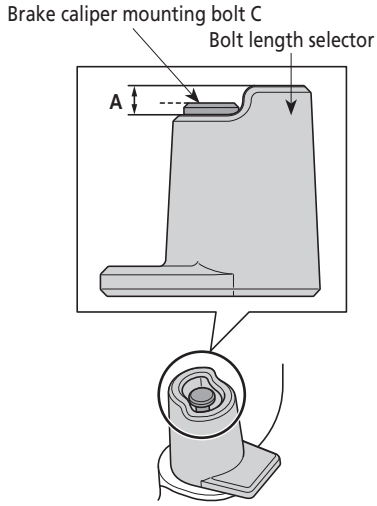

- Do not use a washer when checking the length of brake caliper mounting bolt C.
- The length of the brake caliper mounting bolt C used varies depending on thickness of the frame.
  Use brake caliper mounting bolt C that is suitable for the thickness of the frame.

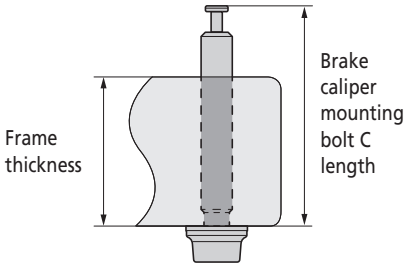

Frame thickness	Brake caliper mounting bolt C length	Y-part
10 mm	23 mm	Y8N208000
15 mm	28 mm	Y8N208050
20 mm	33 mm	Y8N208010
25 mm	38 mm	Y8N208020
30 mm	43 mm	Y8N208030
35 mm	48 mm	Y8N208040

Installing the brake caliper

In the case of a disc brake rotor for a 140 mm front wheel

1

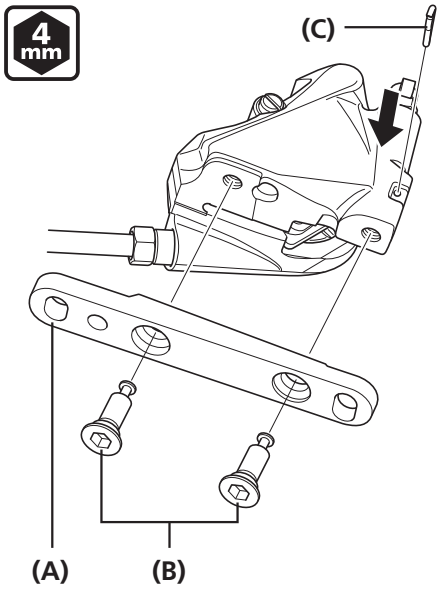

Attach the mount bracket to the brake caliper.

(A) Mount bracket
(B) Brake caliper mounting bolt B
(C) Bolt fixing pin

Tightening torque	
4 mm	6 - 8 N·m

NOTICE

- Be sure to attach the bolt fixing pin. Check that the bolt fixing pin is fully inserted all the way to the rear.

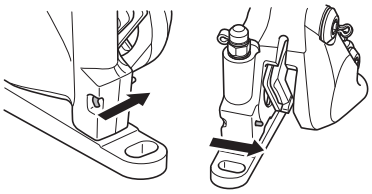

- Observe the direction indicated on the mount bracket when installing it.

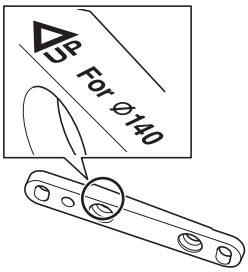

To be continued on next page

Installing the brake caliper

2

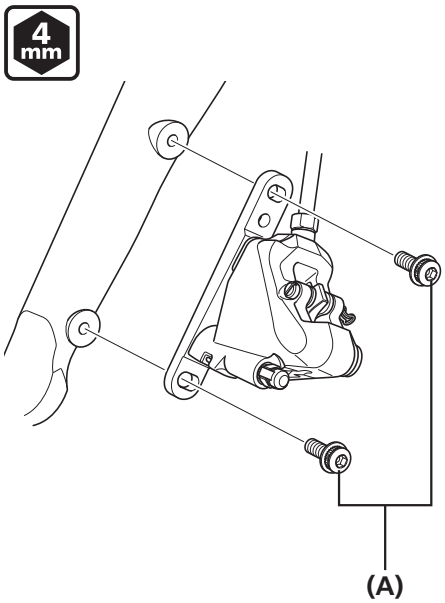

Temporarily attach the mount bracket to the frame.

Depress the brake lever, and tighten the brake caliper mounting bolts A while pressing the brake pads against the disc brake rotor.

(A) Brake caliper mounting bolt A

Tightening torque	
4 mm	6 - 8 N·m

NOTICE

- Be sure to attach a snap ring when installing the brake caliper mounting bolts A.

  * The snap ring installation position is different for 140 mm and 160 mm. (The illustration shows a 140 mm disc brake rotor.)

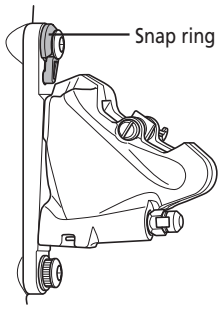

Installing the brake caliper

In the case of a disc brake rotor for a 160 mm front wheel

1

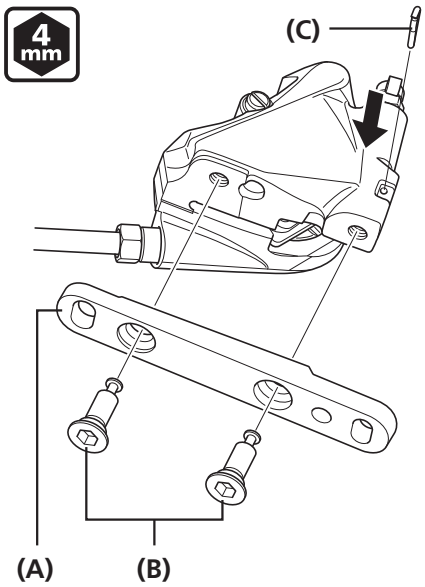

Attach the mount bracket to the brake caliper.

(A) Mount bracket
(B) Brake caliper mounting bolt B
(C) Bolt fixing pin

Tightening torque	
4 mm	6 - 8 N·m

NOTICE

- Be sure to attach the bolt fixing pin. Check that the bolt fixing pin is fully inserted all the way to the rear.

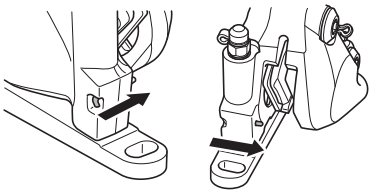

- Observe the direction indicated on the mount bracket when installing it.

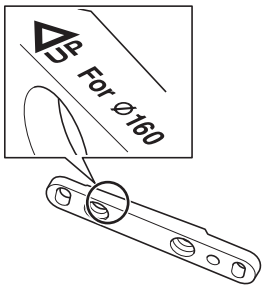

To be continued on next page

2

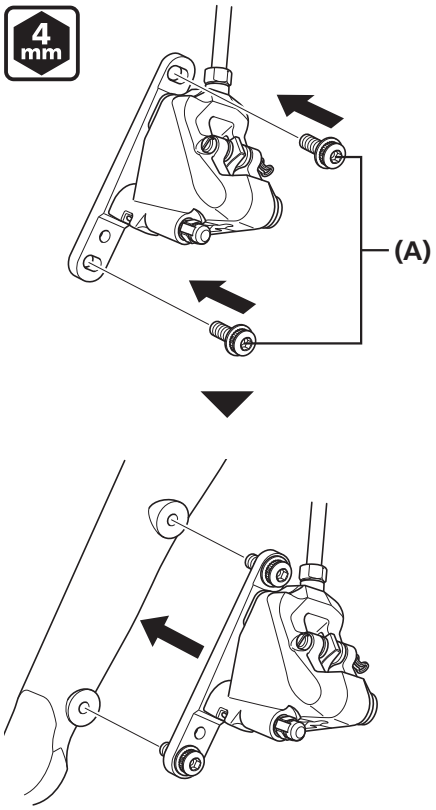

Insert the brake caliper mounting bolts A into the holes in the mount bracket first and then temporarily attach the mount bracket to the frame, as in the illustration.

Depress the brake lever, and tighten the brake caliper mounting bolts A while pressing the brake pads against the disc brake rotor.

(A) Brake caliper mounting bolt A

Tightening torque	
4 mm	6 - 8 N·m

NOTICE

- Do not insert the brake caliper mounting bolts A after placing the mount bracket on to the surface of the frame.
  The brake caliper may be scratched by the mounting bolts.

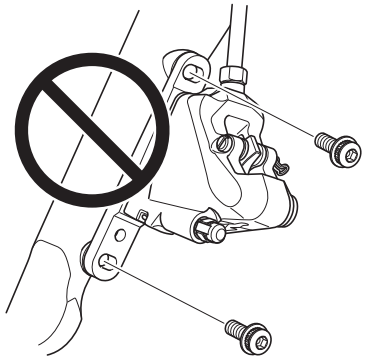

- Be sure to attach a snap ring when installing the brake caliper mounting bolts A.
  * The snap ring installation position is different for 140 mm and 160 mm. (The illustration shows a 160 mm disc brake rotor.)

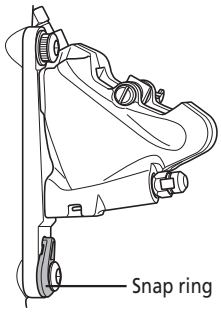

Installing the brake caliper

In the case of a disc brake rotor for a 140 mm rear wheel

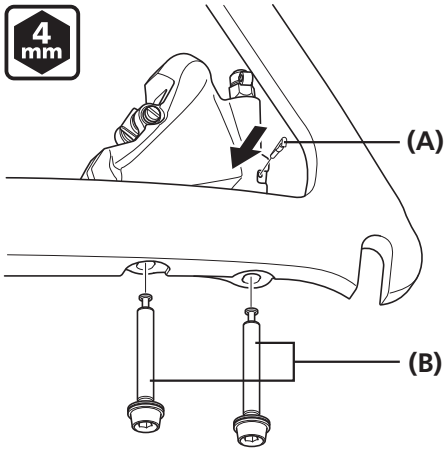

Attach the brake caliper to the frame.

(A) Bolt fixing pin
(B) Brake caliper mounting bolt C

Tightening torque	
4 mm	6 - 8 N·m

NOTICE

Be sure to attach the bolt fixing pin.

In the case of a disc brake rotor for a 160 mm rear wheel

1

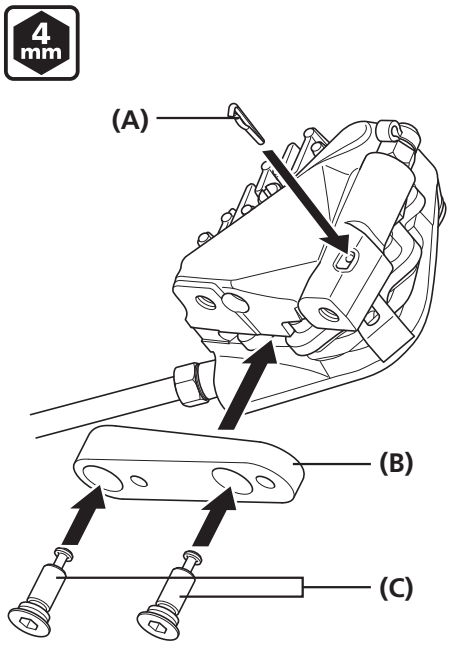

Attach the mount bracket to the brake caliper.

(A) Bolt fixing pin
(B) Mount bracket
(C) Brake caliper mounting bolt B

Tightening torque	
4 mm	6 - 8 N·m

NOTICE

- Be sure to attach the bolt fixing pin.
- Observe the direction indicated on the mount bracket when installing it.

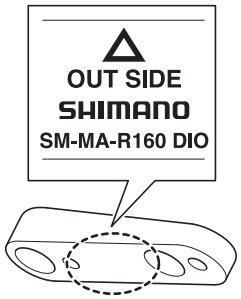

To be continued on next page

Installing the brake caliper

2

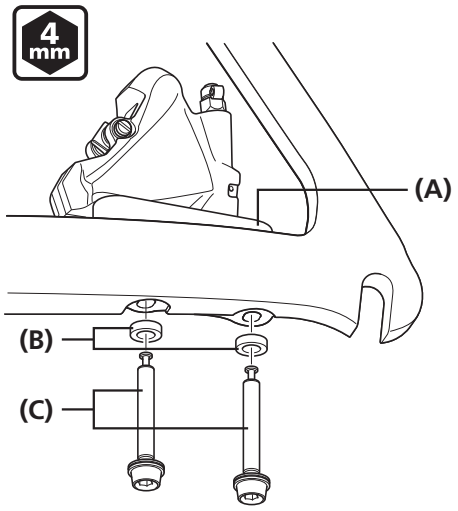

Attach the mount bracket to the frame.

(A) Mount bracket
(B) Washers
(C) Brake caliper mounting bolt C

Tightening torque	
4 mm	6 - 8 N·m

NOTICE

- Be sure to use the washers when installing the mount bracket.
- Be sure to attach a retaining clip when installing brake caliper mounting bolts C.

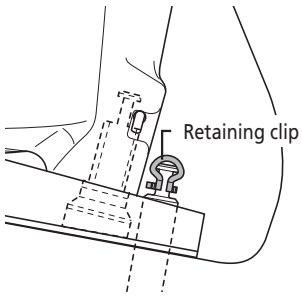

■ Temporary tightening of the frame fixing bolts

Fixing pin insertion method

Front	Rear
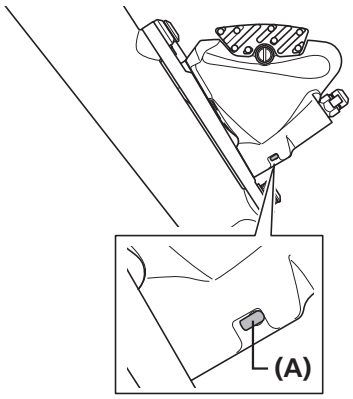	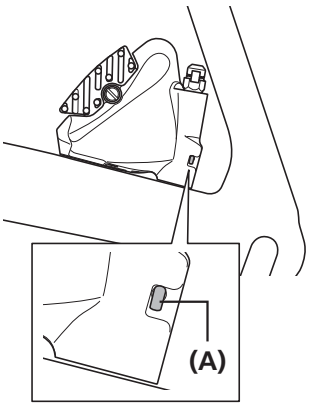

(A) Bolt fixing pin

CONNECTION OF ELECTRIC WIRES

CONNECTION OF ELECTRIC WIRES

For information on how to use the TL-EW02, refer to the "How to use the TL-EW02" section.

Connection of junction A

ST-R8050/ST-R8070/ST-R8071 with SM-EW90 routing map

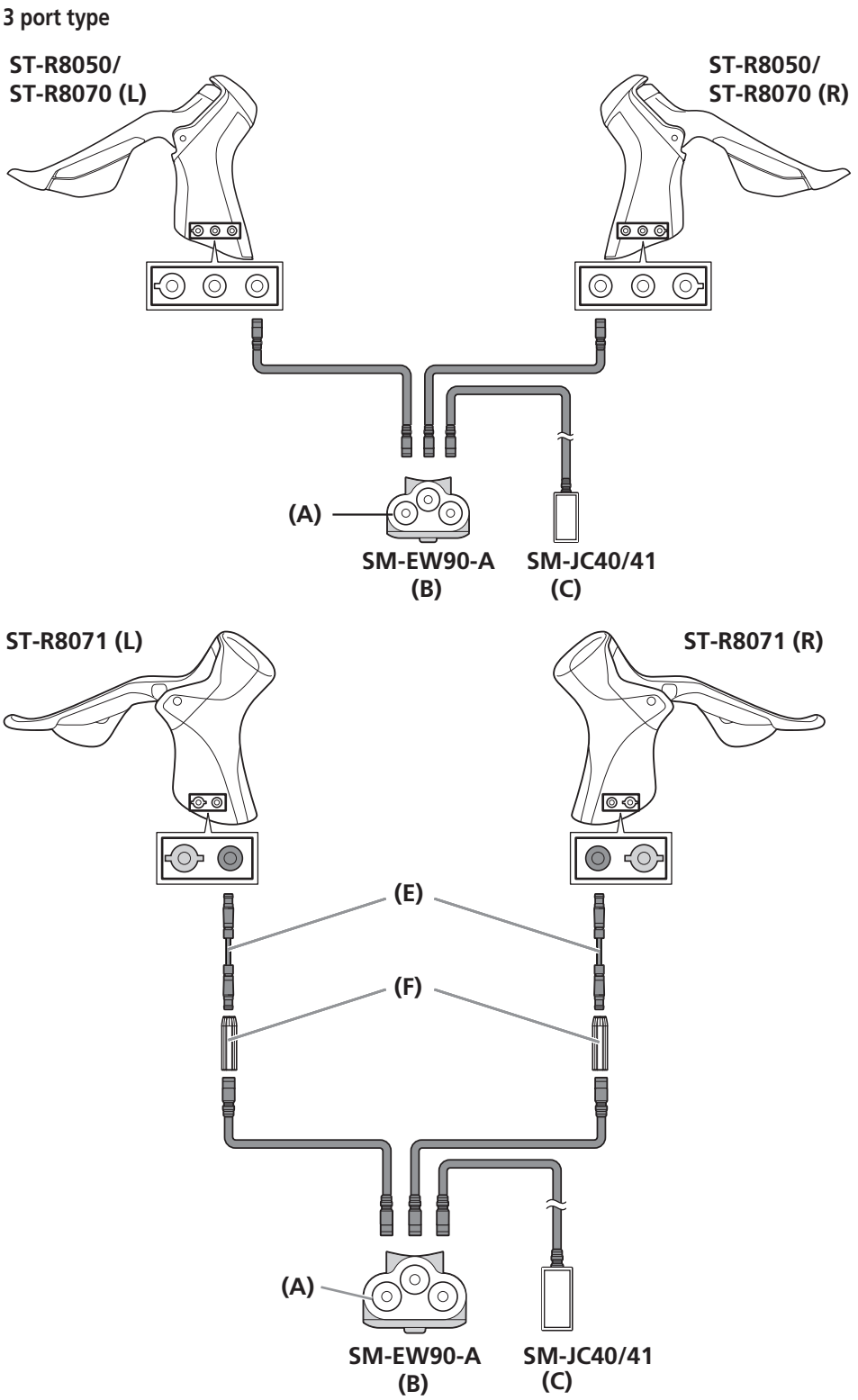

(A) E-TUBE port ×3
(B) Junction A
(C) Junction B
(D) E-TUBE port ×5
(E) EW-SD300-I
(F) EW-AD305

NOTICE

ST-R8070 does not have a port for satellite shifter.

TECH TIPS

When wiring SM-EW90, consider the positioning of ST-R8050/ST-R8070/ST-R8071 and ensure that there is sufficient slack in the wires to allow for the full turning of the handlebar.

Connection of junction A

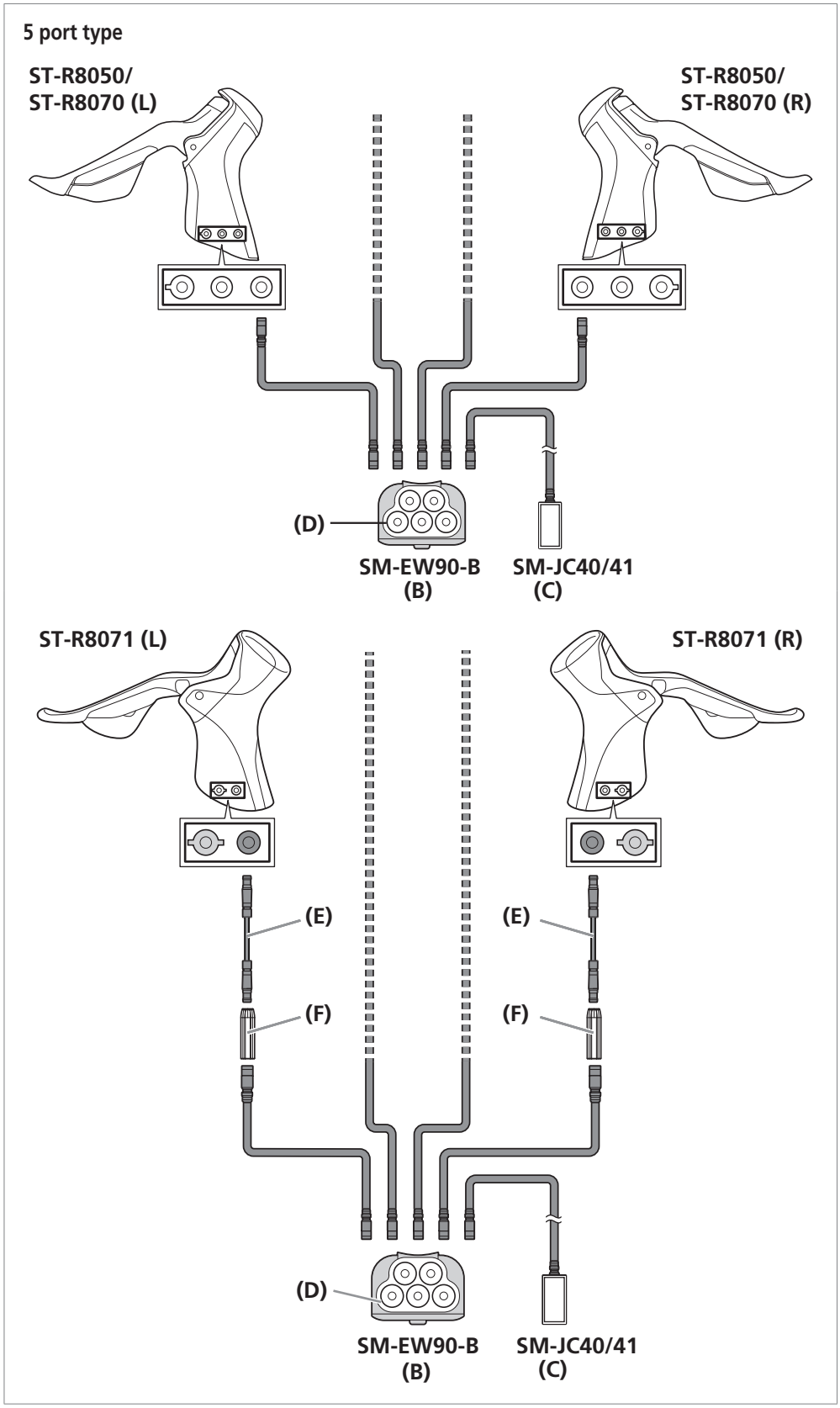

(A) E-TUBE port ×3
(B) Junction A
(C) Junction B
(D) E-TUBE port ×5
(E) EW-SD300-I
(F) EW-AD305

NOTICE

ST-R8070 does not have a port for satellite shifter.

TECH TIPS

When wiring SM-EW90, consider the positioning of ST-R8050/ST-R8070/ST-R8071 and ensure that there is sufficient slack in the wires to allow for the full turning of the handlebar.

ST-R8050/ST-R8070/ST-R8071 with EW-RS910 routing map

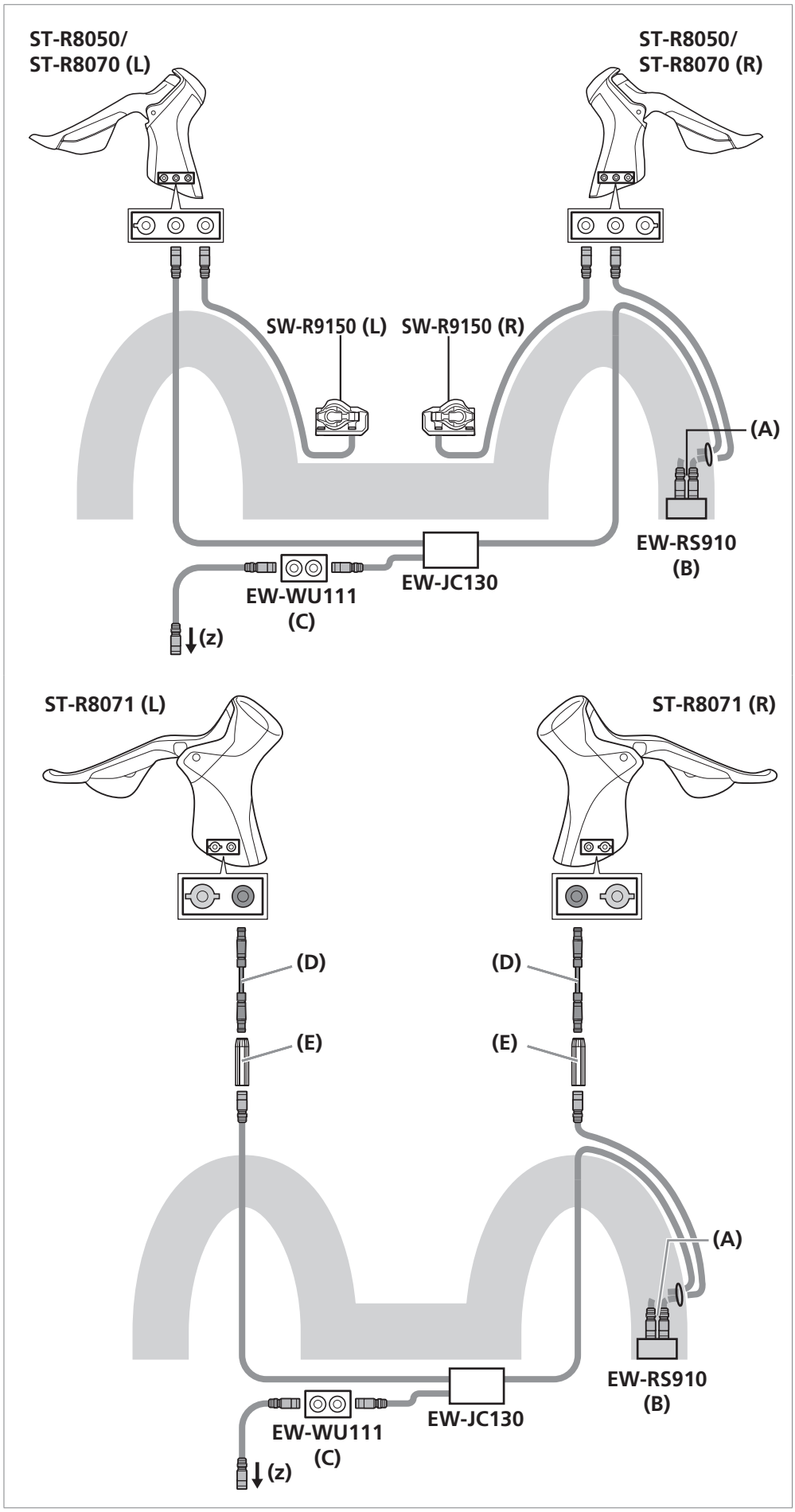

(z) To frame (Junction B)

(A) E-TUBE port ×2
(B) Junction A
(2 port bar end type junction)
(C) Wireless unit
(D) EW-SD300-I
(E) EW-AD305

NOTICE

ST-R8070 does not have a port for satellite shifter.

TECH TIPS

When wiring EW-RS910 consider the positioning of ST-R8050/ST-R8070/ST-R8071 and ensure that there is sufficient slack in the wires to allow for the full turning of the handlebar.

Connection of junction B

External type (SM-JC40)

1 Connect the electric wires to junction A and junction B.

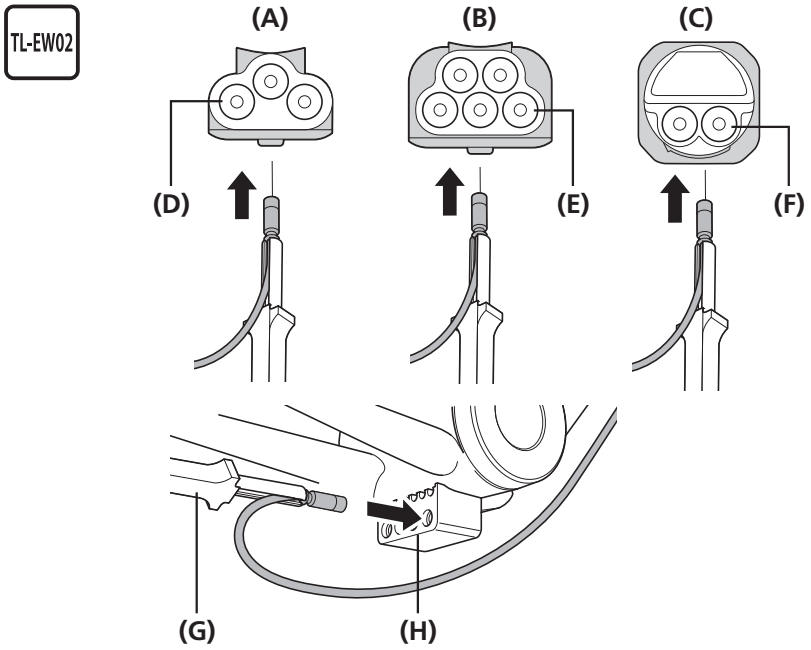

(A) SM-EW90-A Junction A
(B) SM-EW90-B Junction A
(C) EW-RS910 Junction A
(D) E-TUBE port ×3
(E) E-TUBE port ×5
(F) E-TUBE port ×2
(G) TL-EW02
(H) Junction B

TECH TIPS

When connecting electric wires, push them in until you feel and hear a click.

Connecting to FD-R8050

2 Attach the plug cover to the electric wire.

Connect the electric wire to the front derailleur together with the plug cover.

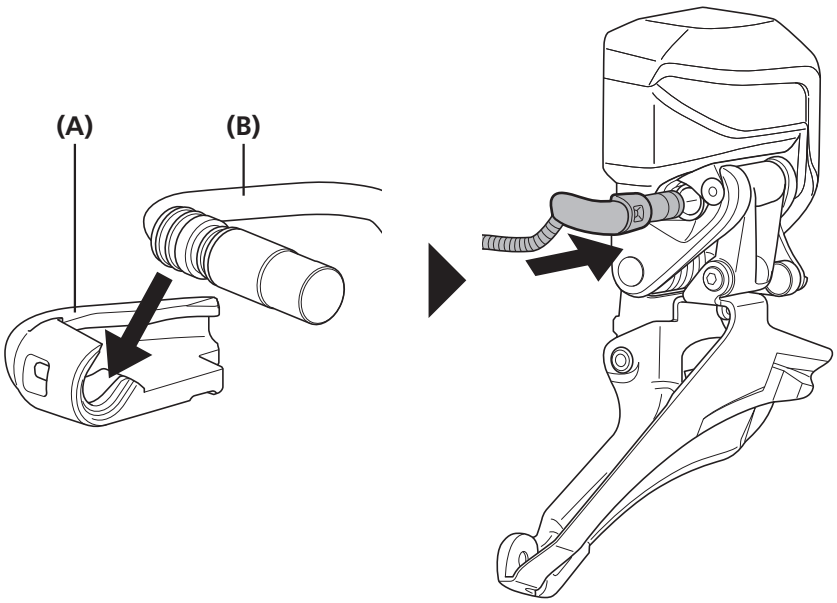

(A) Plug cover
(B) Electric wire

To be continued on next page

Connecting to other parts

2

Connect the electric wires to the rear derailleur and the battery mount.

Rear derailleur

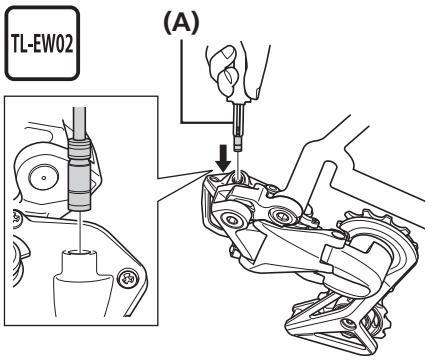

Battery mount

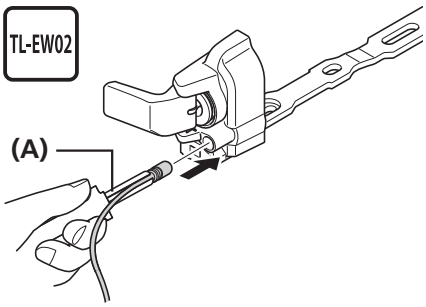

(A) TL-EW02

3

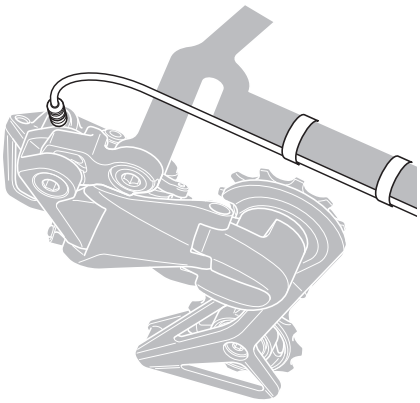

Temporarily secure the electric wire along the frame with tape, and connect it to junction B.

NOTICE

When routing the electric wire to the rear derailleur, be sure to install it to the bottom of the chainstay to avoid any interference between the cable and the chain.

4

Wind any excess length of electric wire inside junction B to adjust the length.

Example of adjusting junction B length

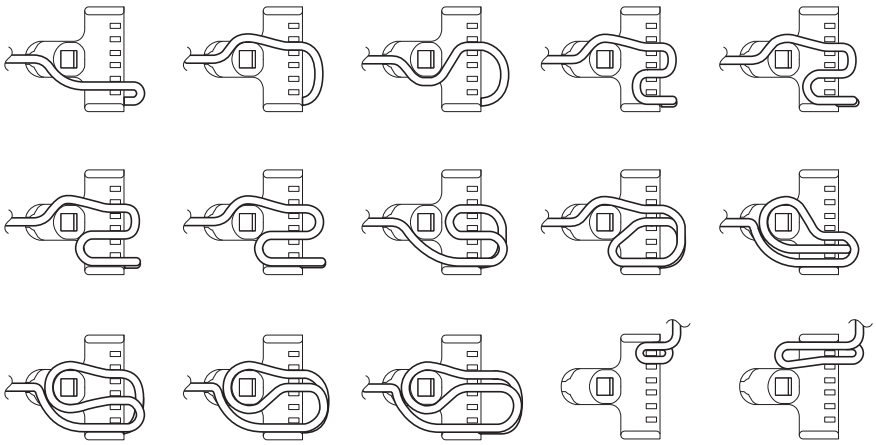

To be continued on next page

5

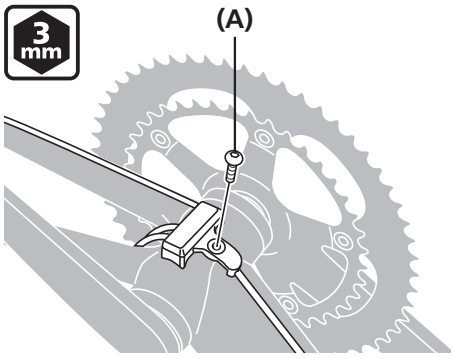

Once the electric wires have been routed, secure junction B underneath the bottom bracket shell.

(A) Junction B fixing bolt (10.5 mm or 15 mm)

Tightening torque	
3 mm	1.5 - 2 N·m

6

Next, install the electric wire cover onto the frame.

Place the electric wire cover over the electric wires, and then attach it to the frame.

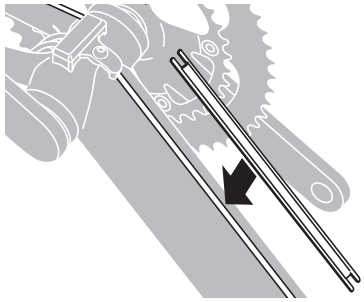

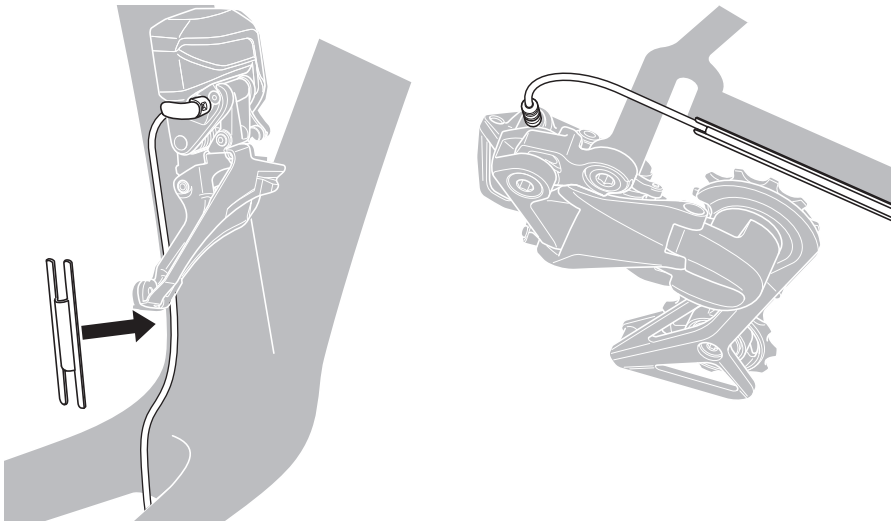

NOTICE

To ensure adhesion, before installing the electric wire cover, wipe off the grease on the frame with alcohol or a cleaner.

Built-in type (SM-JC41)

1

First pass the electric wires for junction A, the battery mount, the front derailleur and the rear derailleur through the holes in the frame into the bottom bracket shell.

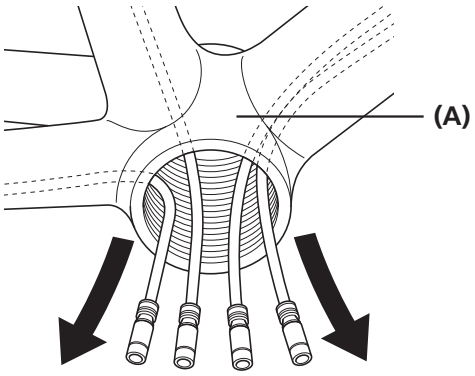

Electric wire for rear derailleur

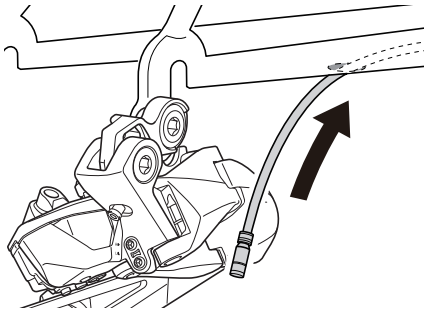

Electric wire for battery mount [In the case of an external battery (SM-BTR1)]

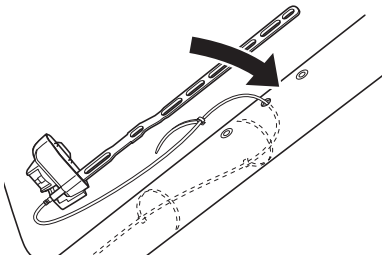

Electric wire for front derailleur

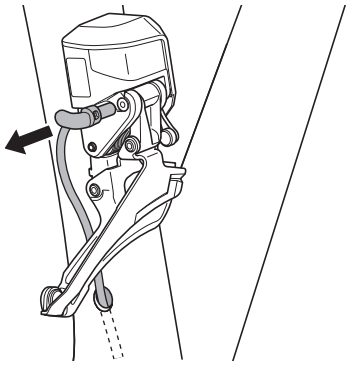

Electric wire for battery mount [In the case of a built-in battery (SM-BTR2/BT-DN110/BT-DN110-A)]

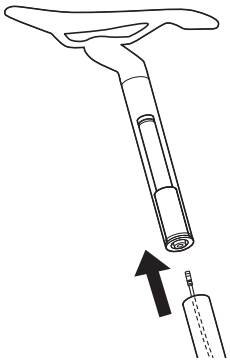

Electric wire for junction A

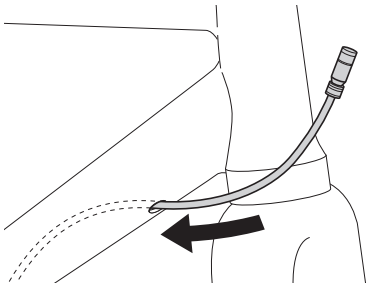

(A) Bottom bracket shell

TECH TIPS

The electric wires for built-in use can be inserted only in one direction.
Make sure that you insert them from the direction shown in the illustration.

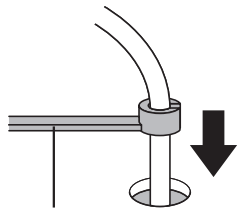

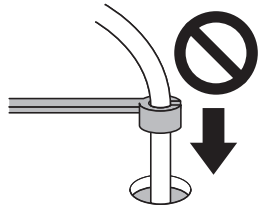

To be continued on next page

2

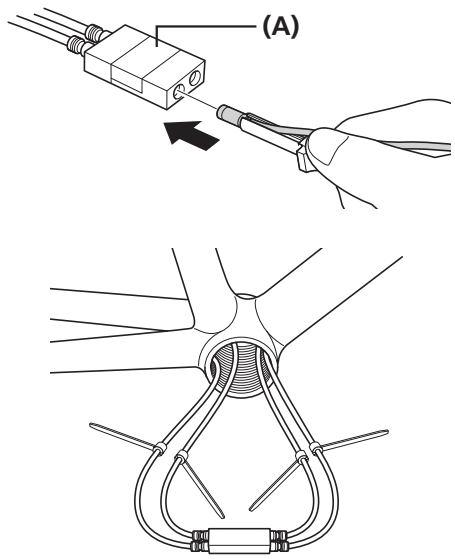

Connect each electric wire to junction B.

(A) SM-JC40/41 Junction B

TECH TIPS

When connecting electric wires, push them in until you feel and hear a click.

3

Connect the electric wires to junction A.

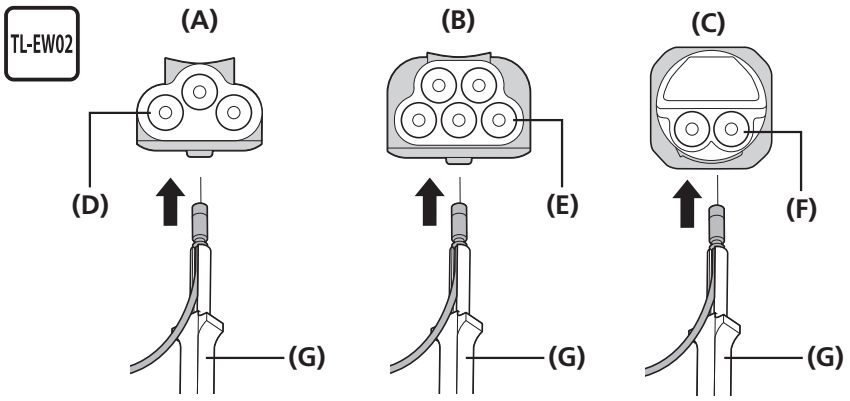

(A) SM-EW90-A Junction A
(B) SM-EW90-B Junction A
(C) EW-RS910 Junction A
(D) E-TUBE port ×3
(E) E-TUBE port ×5
(F) E-TUBE port ×2
(G) TL-EW02

To be continued on next page

Connection of junction B

Connecting to FD-R8050

4

Attach the plug cover to the electric wire.

Connect the electric wire to the front derailleur together with the plug cover.

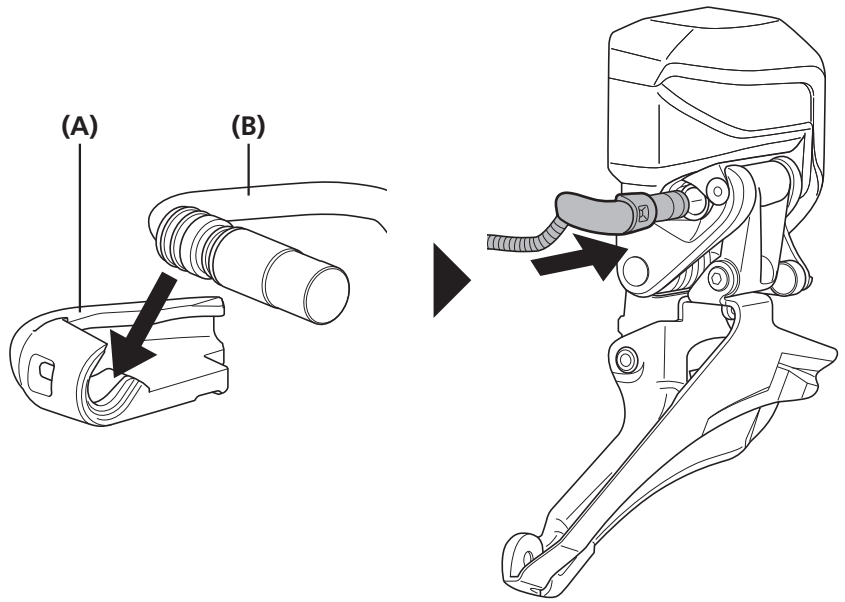

(A) Plug cover
(B) Electric wire

Connecting to other parts

4

Connect the electric wires to the rear derailleur and the battery mount.

Rear derailleur

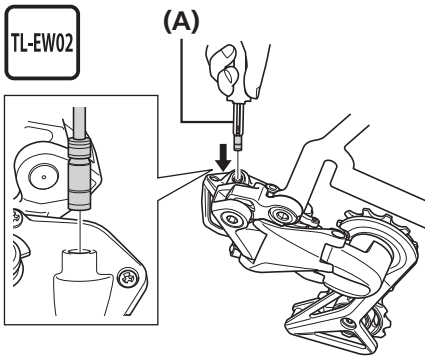

Battery mount

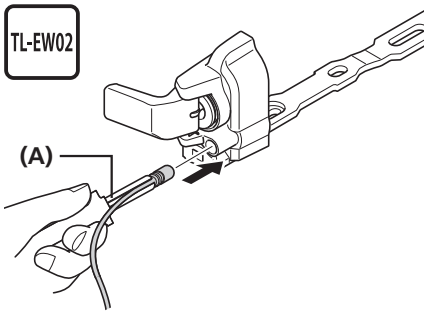

(A) TL-EW02

■ Connecting to the dual control lever

ST-R8050/ST-R8070

1

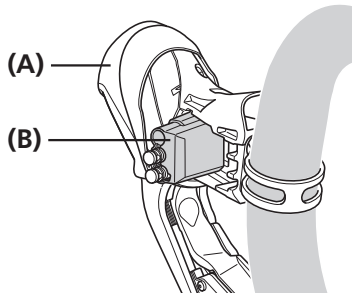

Pull back the bracket cover from the rear and lift up the connector cover.

(A) Bracket cover
(B) Connector cover

2

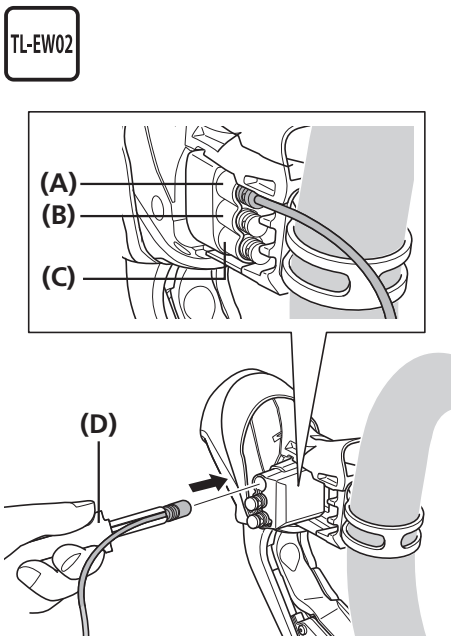

Use TL-EW02 to connect the connector of the electric wire to an E-TUBE port in the lever.

Connect to either E-TUBE port **[X]** or E-TUBE port **[Y]**.
(A connection can be made with either E-TUBE port **[X]** or E-TUBE port **[Y]**.)

Be sure to push them together until they connect with a click.

(A) E-TUBE port **[X]**
(B) E-TUBE port **[Y]**
(C) Port for satellite shifter (ST-R8070 does not have this port.)
(D) TL-EW02

NOTICE

- When the handle is gripped or the bar tape is wound, the electric wires may be pulled out. By allowing sufficient wire length, accidental disconnection can be prevented after winding the bar tape.
- This length margin of electric wire is also necessary to open the bracket cover when additional switch and the SM-PCE02 is connected.

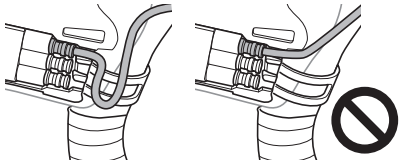

TECH TIPS

The remaining unused E-TUBE port **[X]** or E-TUBE port **[Y]** can be used for an additional shifting switch or SM-PCE02. (The port for satellite shifter cannot be used for an additional shift switch or SM-PCE02.)
This is an example connection.

ST-R8071

1

Turn over the bracket cover from the back side.

Gently turn over the ends of the bracket cover with both hands and slowly push them down.

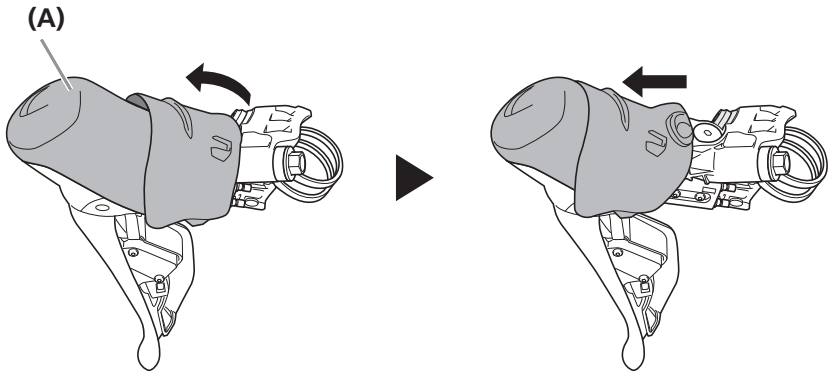

(A) Bracket cover

2

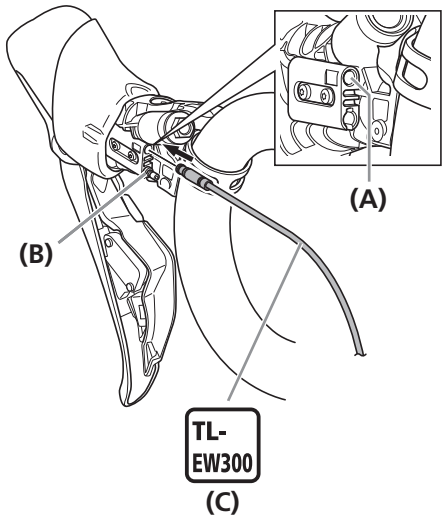

Connect the electric wire. If required, first remove the dummy plug of the E-TUBE port.
Be sure to push it in firmly with the TL-EW300 until you feel a click.
For information on how to use the TL-EW300, refer to the "How to use TL-EW300 (for EW-SD300-I)" section.

(A) E-TUBE port
(B) Dummy plug
(C) Electric wire

NOTICE

- It is possible for the electric wires to become disconnected accidentally while riding or winding the handlebar tape. By allowing sufficient wire length, accidental disconnection can be prevented after winding the handlebar tape.
- Ensure that the electric wire to connect to the dual control levers has extra length to make it easier to remove and insert when performing maintenance.

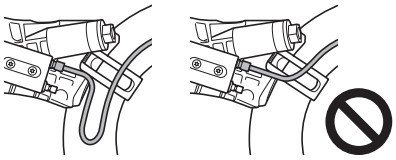

Connecting to the dual control lever

SW-R9160/ST-R8060

For the following models, attach the electric wire of the product to junction A.

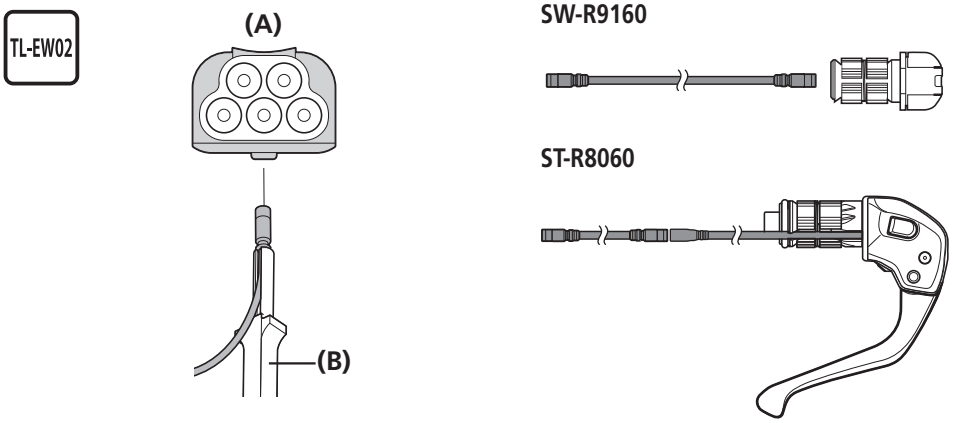

(A) Junction A
(B) TL-EW02

SW-R610

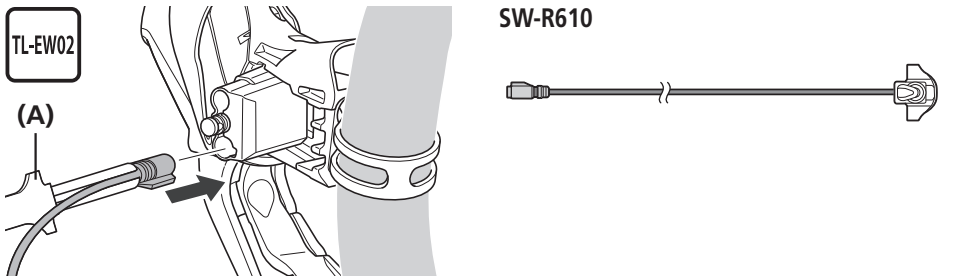

(A) TL-EW02

TECH TIPS

The port shape is different only for SW-R610.

■ Routing junction B and the electric wires inside the frame

1

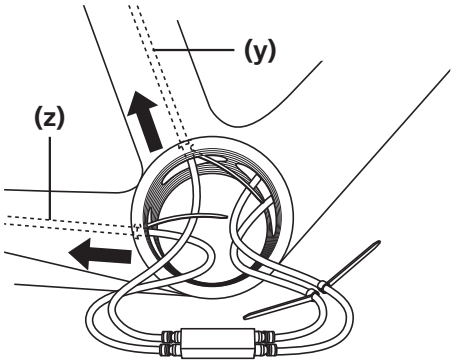

Pass the electric wires for the front derailleur and the rear derailleur through the seat tube and chainstay respectively.

(y) For front derailleur

(z) For rear derailleur

2

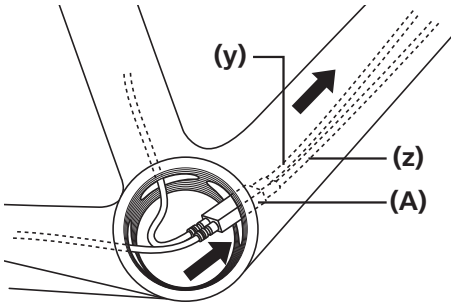

Pass the electric wires for junction A, the battery mount, and junction B through the down tube.

(y) For junction A

(z) For battery mount

(A) Junction B

NOTICE

Be careful not to damage any parts with the screws of the bottom bracket shell.

3

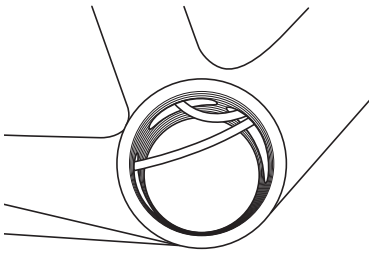

Set the electric wires so that only the electric wires for the front derailleur and the rear derailleur are visible inside the bottom bracket shell, and if any extra parts such as wire holders are protruding, push them back inside the frame.

SM-BTR2/BT-DN110/BT-DN110-A

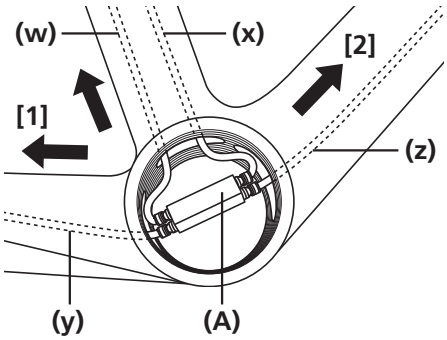

Follow the same procedure when using SM-BTR2/BT-DN110/BT-DN110-A as a battery adapter.

(w) For lithium ion battery (built-in type)

(x) For front derailleur

(y) For rear derailleur

(z) For junction A

(A) Junction B

■ Assembly of the bottom bracket

1

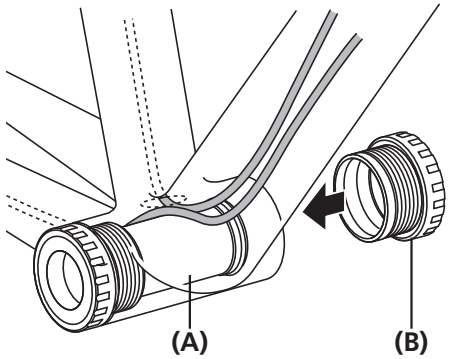

When installing the inner cover to the bottom bracket shell, make sure that the electric wires for the front derailleur and the rear derailleur pass over the top of the inner cover.

(A) Inner cover
(B) Adapter

2

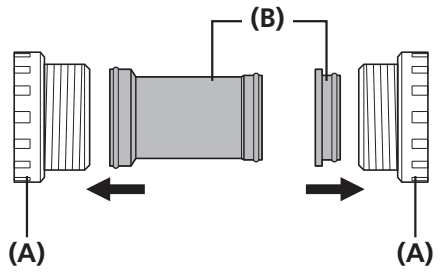

Install the inner cover to the bottom bracket adapter.

(A) Adapter
(B) Inner cover

NOTICE

If using a frame which does not have enough space between the inside of the bottom bracket shell and the inner cover to route the electric wires use an inner cover which is sold separately.

Installation of grommets

1

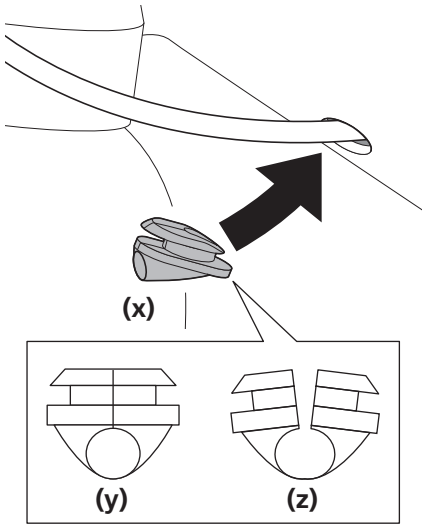

Install grommets in appropriate positions for the electric wires.

(x) Junction A side

(y) Close

(z) Open

TECH TIPS

There are two types of grommets.
Choose one according to the shape of the hole in the frame.

Circle: SM-GM01

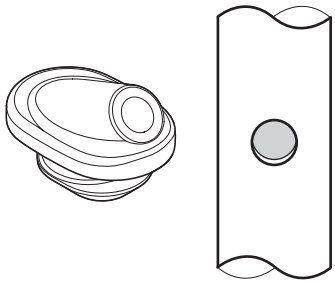

Ellipse: SM-GM02

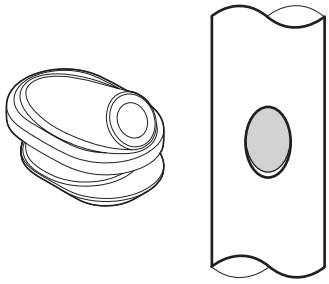

2

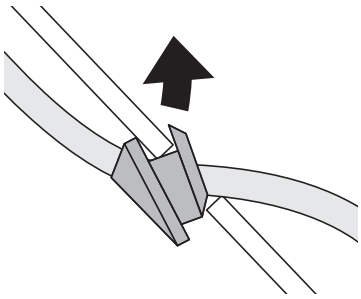

Insert the grommets into the holes in the frame starting with the rear end.

To be continued on next page

Checking connections

3

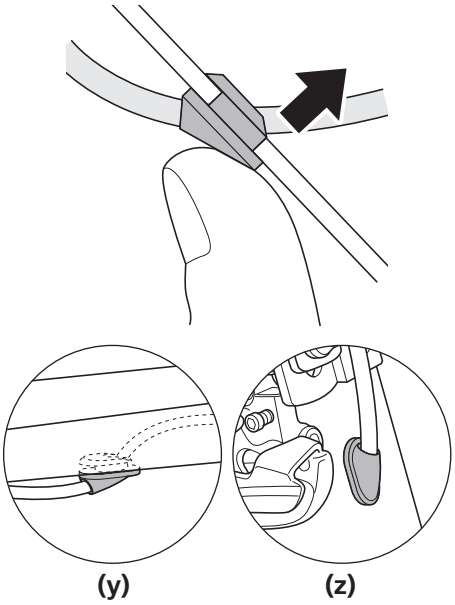

Push the other end to set in place.

(y) Rear derailleur

(z) Front derailleur

■ Checking connections

1 After connecting the electric wires to all of the components, install the battery and check the operation.

2 Operate the shifting switches and check that the front and rear derailleurs both operate.

⚠ CAUTION

Make sure to remove the battery before performing operations that involve close proximity to the front derailleur, such as installation/uninstallation of the front chainwheel or front derailleur, or installation/adjustment of the chain.
If the front derailleur is activated by accident, there is a risk of your fingers getting caught and injury.

■ Disconnection of the electric wires

FD-R8050

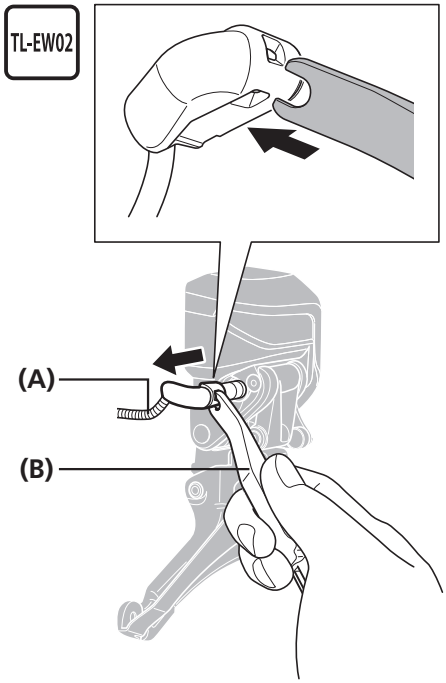

Insert the tips of the wider end of the TL-EW02 into the two holes on the plug cover, then remove the electric wire.

(A) Electric wire
(B) TL-EW02

NOTICE

- Do not keep connecting and disconnecting the small waterproof connector. The waterproof section or the connecting section may become worn or deformed, and the function may be affected.
- When removing the electric wire, use the wider end of the TL-EW02 as shown in the figure.
  If you pull the electric wire too firmly, problems with operation may occur.

Disconnection of other parts

With the base portion of the hook firmly held down using the wider end of the TL-EW02, remove the electric wire.

RD-R8050

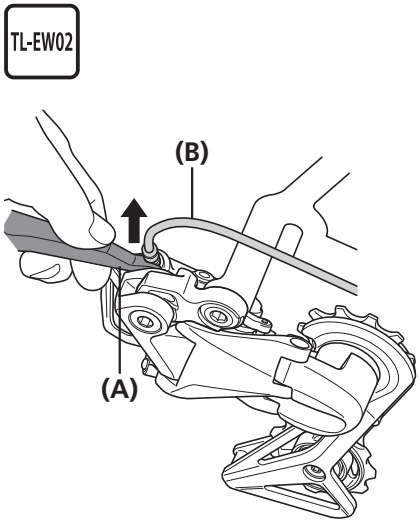

SM-JC40

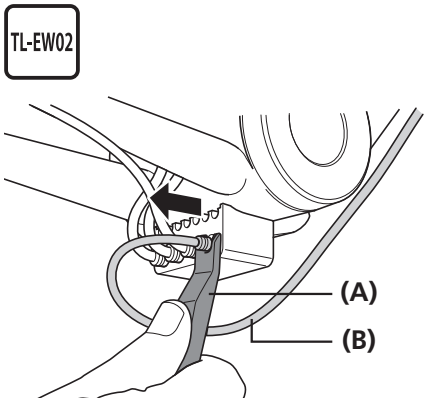

ST-R8050/ST-R8070

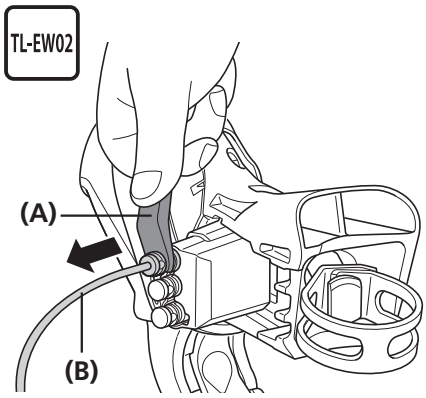

SM-JC41

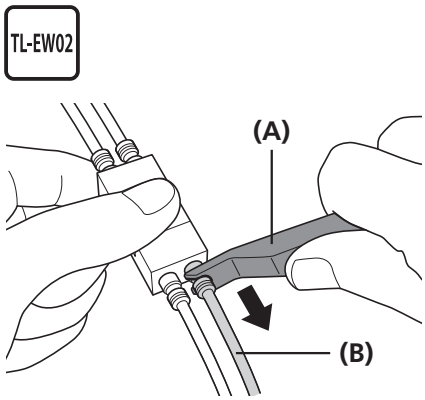

(A) TL-EW02
(B) Electric wire

NOTICE

- Do not keep connecting and disconnecting the small waterproof connector. The waterproof section or the connecting section may become worn or deformed, and the function may be affected.
- When removing the electric wire, use the wider end of the TL-EW02 as shown in the figure.
  If you pull the electric wire too firmly, problems with operation may occur.
- ST-R8070 does not have a port for satellite shifter.

HOW TO OPERATE

HOW TO OPERATE

■ Gear position control

This gear-shifting system is programmed to prevent shifting into gears that would lower the chain tension.
Therefore, if you try to shift into such gears, shifting may function differently from the basic operations.
The illustration below shows the gear positions that would lower the chain tension and the shifting operations performed when you shift into those gears.

Points to remember when shifting the front derailleur

When you shift into the smallest chainring, shifting is controlled as follows.

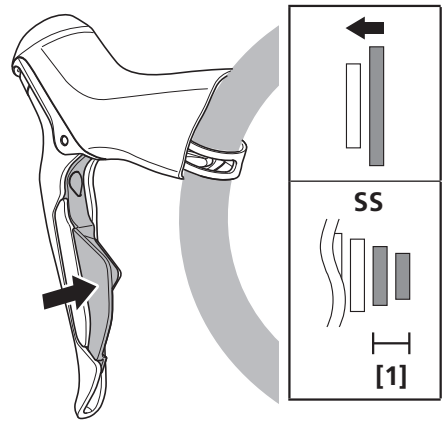

When the chain is in the range [1], shown in the illustration
Operating the shifting switch does not shift the front derailleur.

Instead, the rear derailleur is shifted down through two gears.

When the chain is outside the range [1], shown in the illustration
Operating the shifting switch shifts the front derailleur to the smallest chainring.

[1] From the smallest to the second sprocket.

NOTICE

- If you use combinations of front and rear derailleurs besides those recommended, the shifting-restricted range may become larger.
- Restrictions on gear position can be disabled via the Customize menu in E-TUBE PROJECT. (Restrictions cannot be disabled for 52–36T or 50–34T.)

Points to remember when shifting the rear derailleur

When the chain position is in the smallest front chainring, gear shifting is controlled as follows.

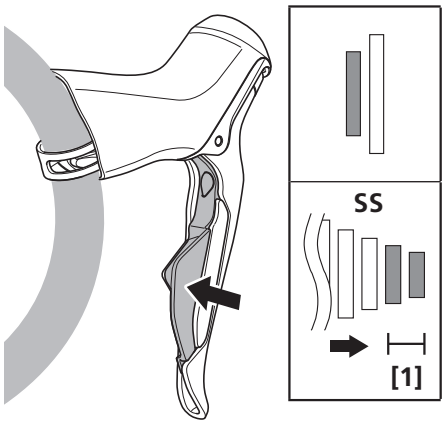

When shifting the rear in the direction of the smallest sprocket
Operating the shifting switch will not shift the chain into the range **[1]**, shown in the illustration.

[1] From the smallest to the second sprocket.

ADJUSTMENT

ADJUSTMENT

Adjustment of the rear derailleur

1 Install the battery.

2

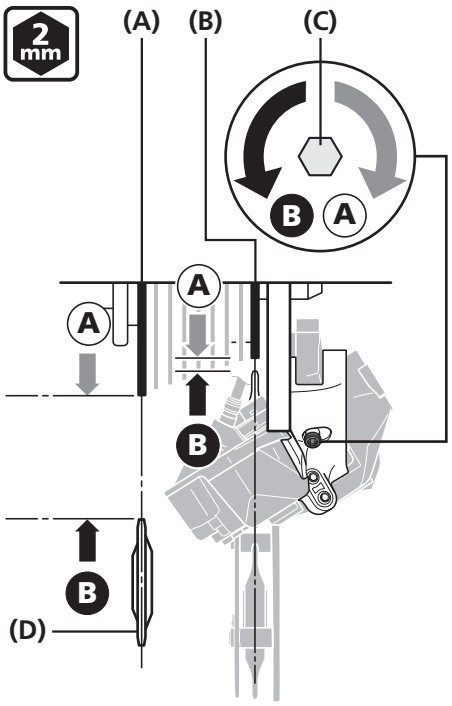

Adjust the end adjust bolt.

Mount the chain on the largest sprocket, and shift gears turning the crank arm.

Turn the end adjust bolt to move the guide pulley as close to the sprocket as possible but not so close that the chain gets jammed.

Next, check that the chain does not get jammed when it is on the smallest sprocket.

If there is any slack in the chain when the chain is mounted on the smallest chainring and smallest sprocket, adjust the end adjust bolt to eliminate it.

(A) Largest sprocket
(B) Smallest sprocket
(C) End adjust bolt
(D) Guide pulley

3

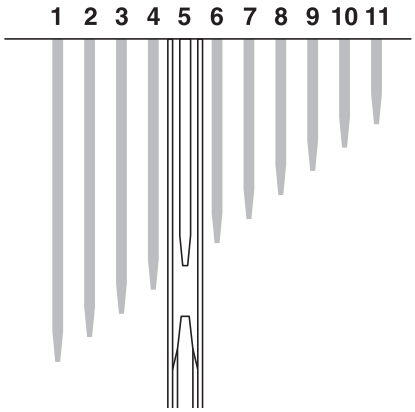

Shift the rear derailleur to the 5th sprocket position.

To be continued on next page

4

SM-EW90-A/B

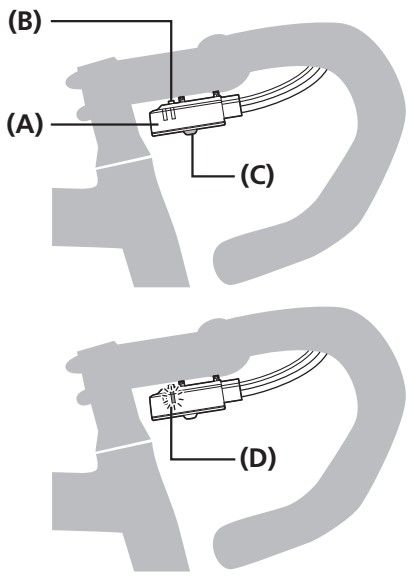

EW-RS910

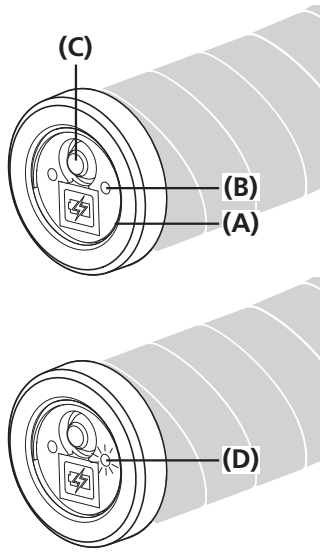

Press the button at junction A until the button LED illuminates in order to switch from gear shifting mode to adjustment mode.

(A) Junction A
(B) LED window for button
(C) Button
(D) Red LED

NOTICE

Note that if you keep pressing the button after the button LED has illuminated, RD Protection Reset will begin.

TECH TIPS

For details on RD Protection, refer to "About RD Protection Function" in the user's manual for the rear derailleur (Di2).

To be continued on next page

5

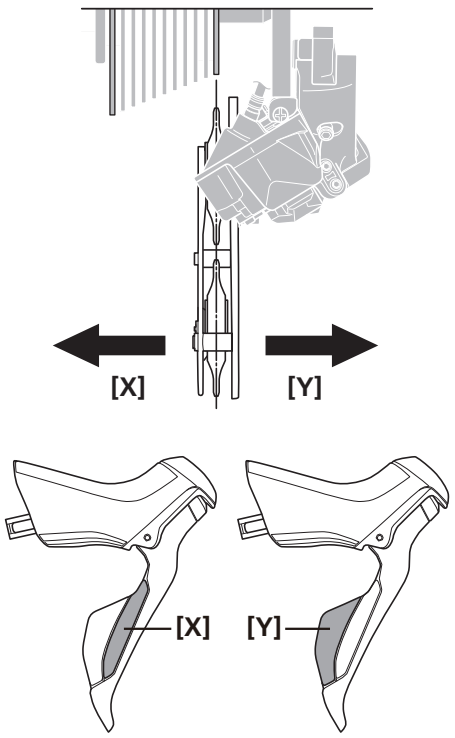

If shifting switch **[X]** is pressed once while the initial setting condition is active, the guide pulley will move one step toward the inside.

If shifting switch **[Y]** is pressed once, the guide pulley will move one step toward the outside.

The guide pulley can move 16 steps inward and 16 steps outward from the initial position, for a total of 32 positions.

TECH TIPS

When adjusting, the guide pulley will overrun slightly and then move back in an exaggerated movement so that you can check the adjustment direction.
When checking the positions of the guide pulley and the sprocket, check the position where the guide pulley finally stops.

6

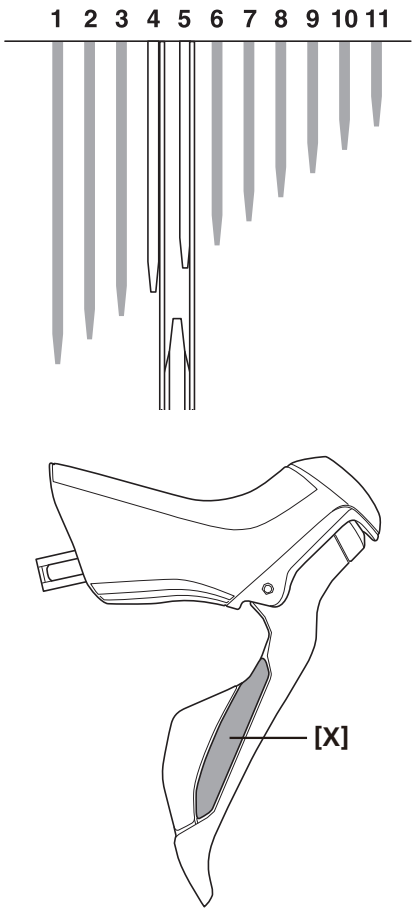

While turning the front chainwheel, operate shifting switch **[X]** to move the guide pulley toward the inside until the chain touches the 4th sprocket and makes a slight noise.

To be continued on next page

7

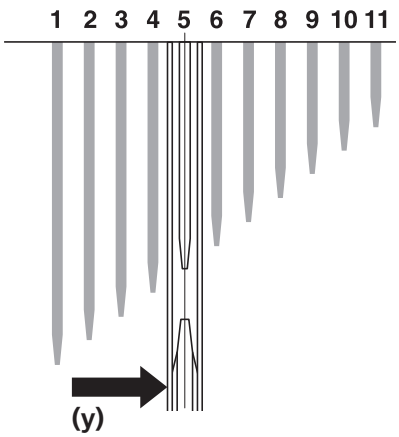

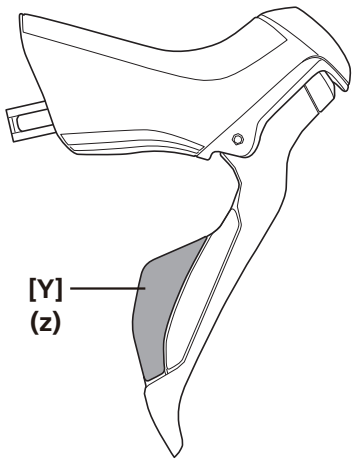

Next, operate shifting switch **[Y]** 4 times to move the guide pulley toward the outside by 4 steps to the target position.

(y) 4 steps

(z) 4 times

8

SM-EW90-A/B

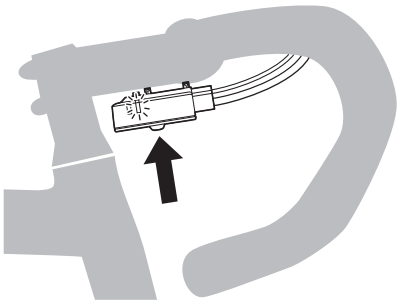

EW-RS910

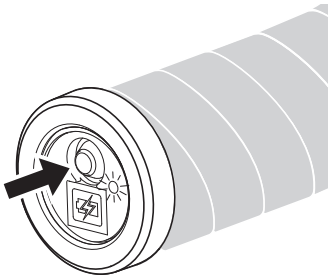

Press the button at junction A until the red LED turns off in order to switch from rear derailleur adjustment mode to gear shifting mode.

Shift to each gear and check that no noise is generated at any gear position.

If adjustment is needed, switch back to adjustment mode and readjust the rear derailleur.

If shifting is not possible for some gears even after adjustment, the gear shifting position may be misaligned.
Use E-TUBE PROJECT Professional to conduct an error check.
For details on the error check, refer to the user's manual for E-TUBE PROJECT Professional.

NOTICE

Change to adjustment mode, operate shifting switch **[Y]**, and move the guide pulley outwards until shift shock is alleviated.

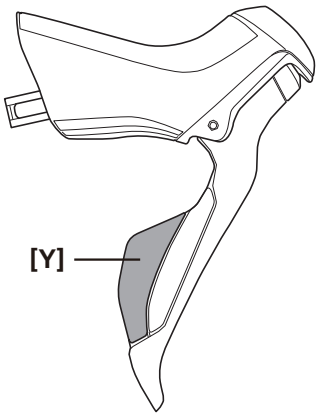

To be continued on next page

9

Next, adjust the stopper bolt.

Adjustment of the low limit stopper bolt

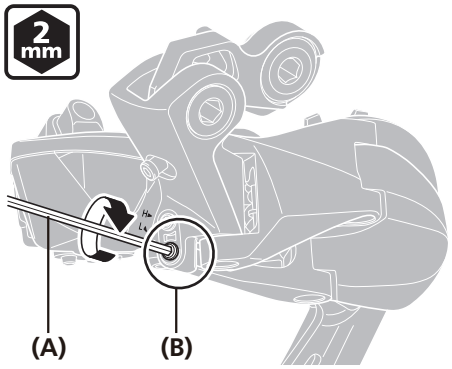

Shift the rear derailleur to the largest sprocket, and then tighten the low limit stopper bolt until it just touches the left link.

If it is tightened too much, the motor will detect a problem and gear shifting will not operate correctly.

(A) 2 mm hexagon wrench
(B) Low limit stopper bolt

TECH TIPS

Possible occurrences if the adjustment bolt is overtightened

- Shifting to the smallest or largest sprocket is not possible. Even if the gears are shifted, the gear may shift back by 1 gear after approximately 5 seconds.
- Noise does not stop.
- The battery level drops quickly. (Load is being placed on the motor)
- The motor may be damaged. (irreparable)

Adjustment of the top-side stopper bolt

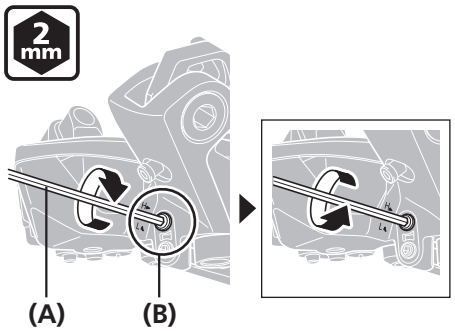

Shift to the smallest sprocket, and then tighten the top-side stopper bolt until it touches the left link at the position where the rear derailleur stops.

From this position, turn the top-side stopper bolt counterclockwise one turn so that an over-stroke allowance can always be maintained.

(A) 2 mm hexagon wrench
(B) Top-side stopper bolt

TECH TIPS

By shifting from the largest sprocket to the smallest sprocket, the rear derailleur will move toward the outside by the over-stroke allowance and then move back.

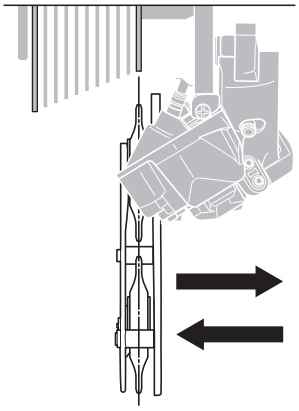

Installing the chain

Chain length

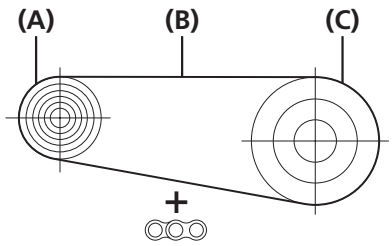

Mount the chain on to the largest sprocket at the rear and the largest chainring at the front.

Next, add 1 to 3 links to set the length of the chain.

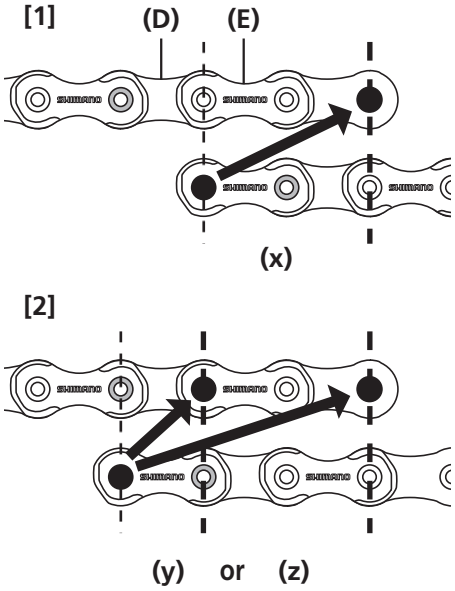

When mounting the chain, if the inner links and outer links match (as in **[1]**), set it to a length with 2 links added.

If the inner links match together and the outer links match together (as in **[2]**), set it to a length with 1 or 3 links added. When setting to the length with 1 link added (in **[2]**), if you are concerned about drive wandering after mounting the chain on the largest sprocket and largest chainring, set it to a length with another 2 links added.

(x) +2 links
(y) +1 link
(z) +3 links

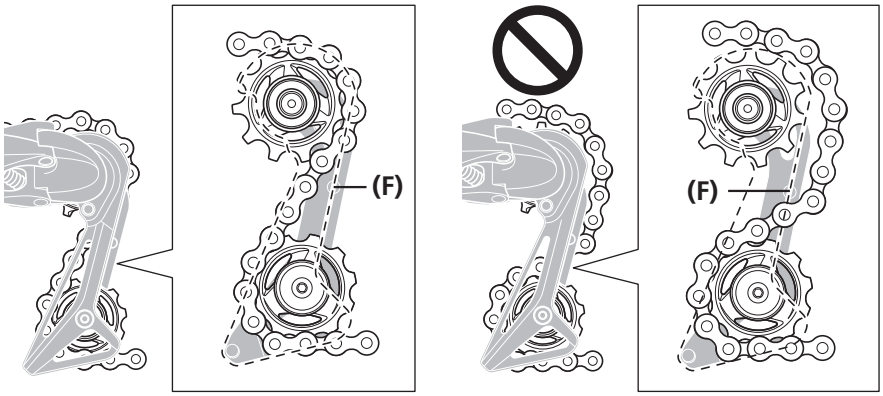

(A) Largest sprocket
(B) Chain
(C) Largest chainring
(D) Inner link
(E) Outer link
(F) Pin for preventing chain derailment

NOTICE

The rear derailleur plate assembly is equipped with a pin or plate that prevents the chain from derailing.
When passing the chain through the rear derailleur, pass it through the rear derailleur body from the side of the chain derailment prevention plate as shown in the illustration.
If the chain is not passed through the correct position, damage may be caused to the chain or rear derailleur.

Adjustment of the front derailleur

Checking bolt positions

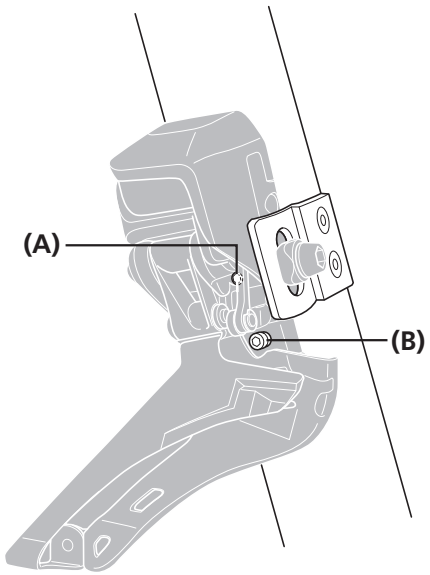

The high limit screw and the support bolt are close to each other.

Make sure that you are using the correct bolt for adjustment.

(A) Support bolt
(B) High limit screw

Top adjustment

1

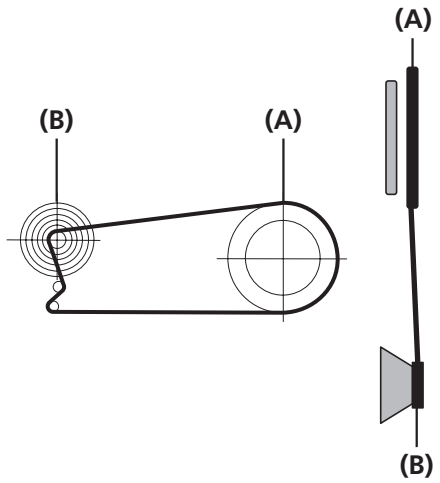

Set the chain on the largest chainring at the front and the smallest sprocket at the rear.

(A) Largest chainring
(B) Smallest sprocket

2

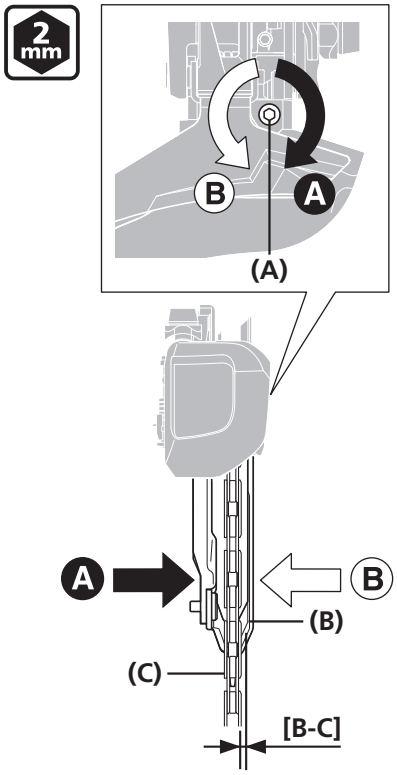

Use a 2 mm hexagon wrench to turn the high limit screw.

Adjust so that the clearance between the chain and the outer plate is 0.5 - 1 mm.

[B-C] 0.5 – 1 mm

(A) High limit screw
(B) Outer plate
(C) Chain

Low position electrical adjustment

For drop handlebar type

1

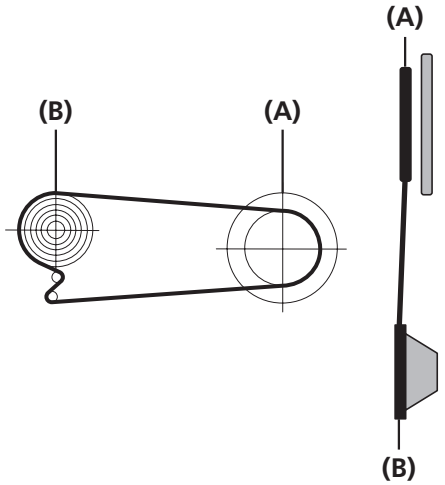

Set the chain on the smallest chainring at the front and the largest sprocket at the rear.

(A) Smallest chainring
(B) Largest sprocket

2

SM-EW90-A/B

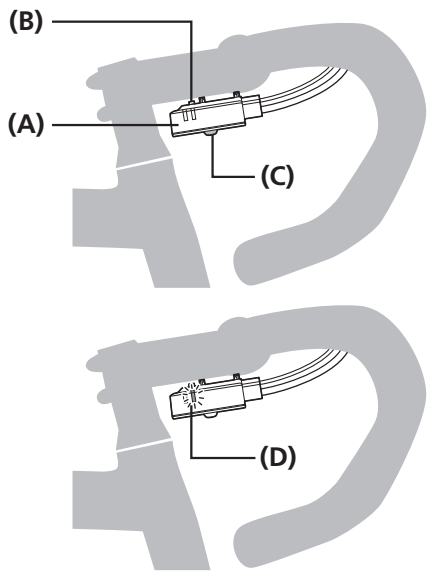

EW-RS910

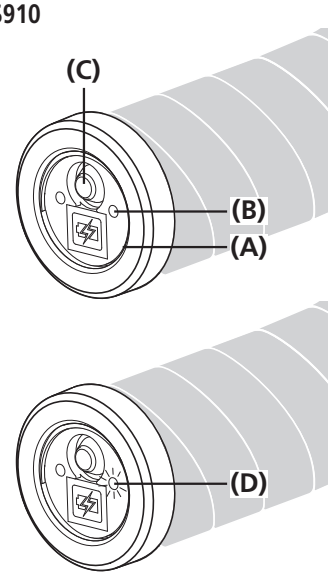

Press the button at junction A until the button LED illuminates in order to switch from gear shifting mode to adjustment mode.

(A) Junction A
(B) LED window for button
(C) Button
(D) Red LED

NOTICE

Note that if you keep pressing the button after the button LED has illuminated, RD Protection Reset will begin.

To be continued on next page

3

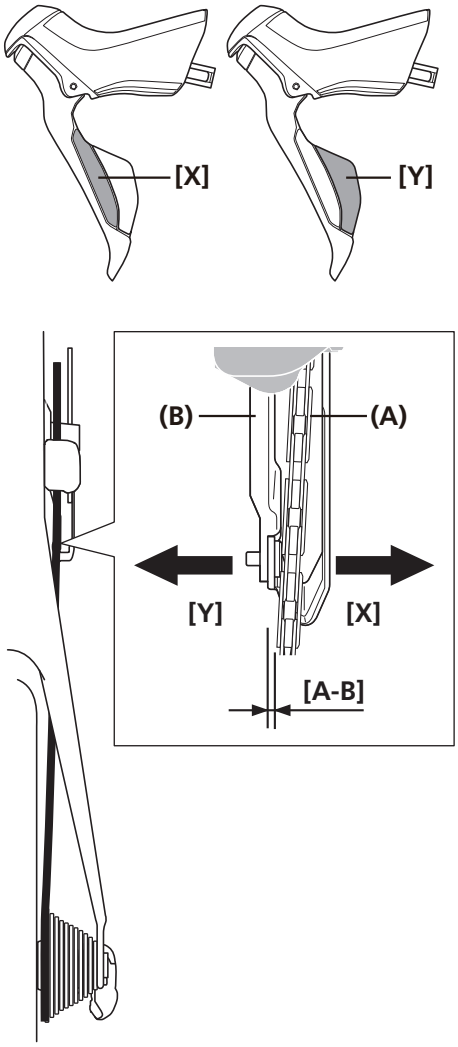

Operate shifting switch **[X]** or **[Y]**.

Adjust the gap between the chain and the inner plate to be 0 - 0.5 mm.

[A-B] 0 – 0.5 mm

(A) Chain
(B) Inner plate

NOTICE

Shift the front derailleur and the rear derailleur to all gears to make sure that the chain does not contact the chain guide.

TECH TIPS

- The adjustable range is 37 steps.
  (18 steps inward and 18 steps outward from the initial position)
- When adjusting, the chain guide will overrun slightly and then move back in an exaggerated manner to help in verifying the adjustment direction.
  Make sure to check the positions of the chain guide and the chain when the chain guide has come to a stop.

4

SM-EW90-A/B

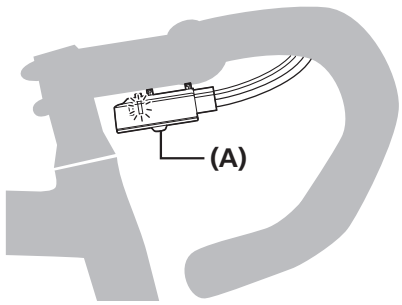

EW-RS910

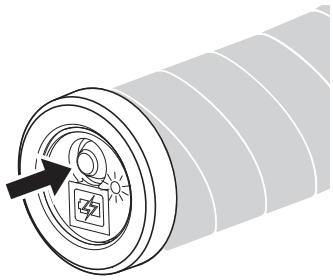

Press the button at junction A until the red LED turns off in order to switch from adjustment mode to gear shifting mode.

(A) Button

For time trial/triathlon handle type

1

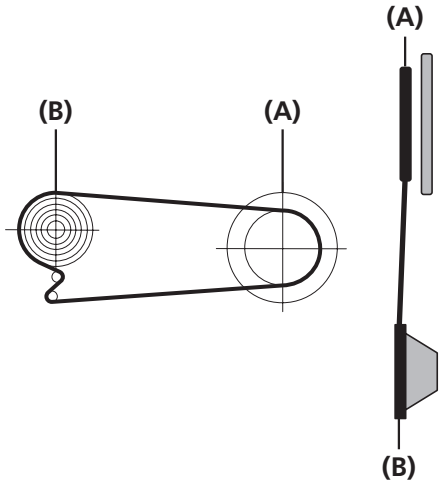

Set the chain on the smallest chainring at the front and the largest sprocket at the rear.

(A) Smallest chainring
(B) Largest sprocket

TECH TIPS

E-TUBE PROJECT can be used to set the chain to the smallest chainring and largest sprocket.

2

EW-RS910

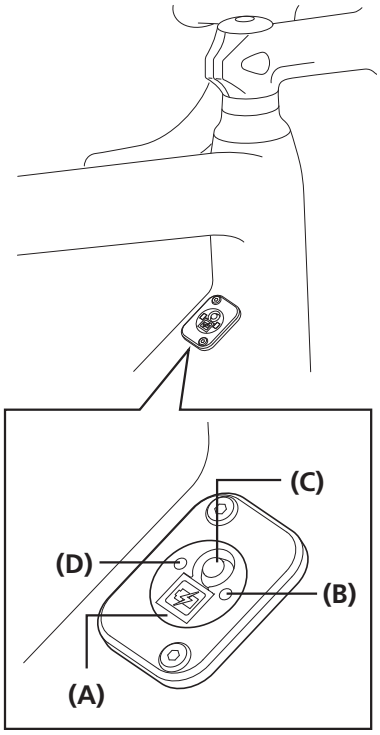

Press the button at junction A until the button LED illuminates in order to switch from gear shifting mode to adjustment mode.

(A) Junction A
(B) LED window for button
(C) Button
(D) Battery level display LED

NOTICE

Note that if you keep pressing the button after the button LED has illuminated, RD Protection Reset will begin.

TECH TIPS

SM-EW90-A/B can also be switched to adjustment mode by operating the button the same way.

3

Double-click the button at junction A, and switch to front derailleur adjustment mode.

TECH TIPS

When you switch to front derailleur adjustment mode, the battery level display LED flashes red.

To be continued on next page

4

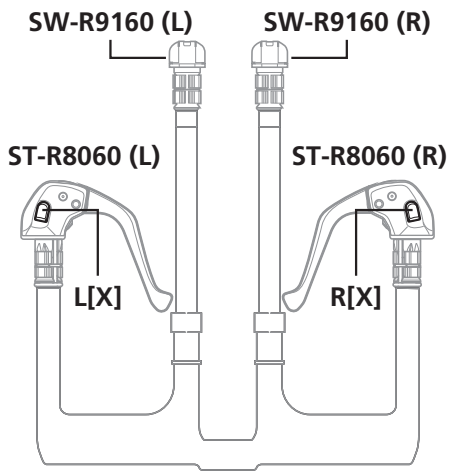

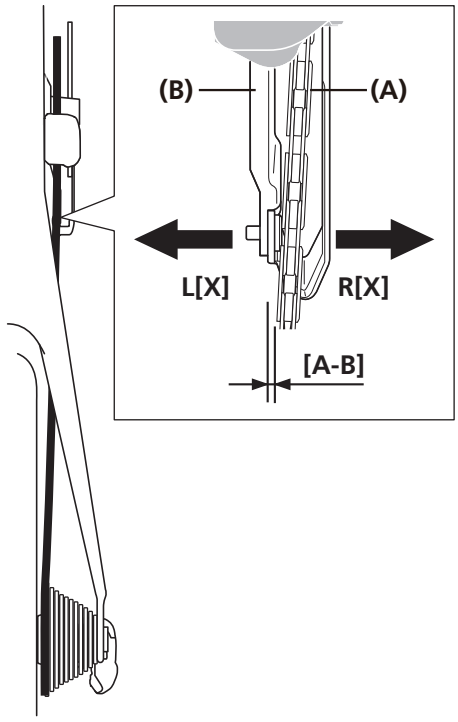

Operate shifting switch **R[X]** or **L[X]**.

Adjust the gap between the chain and the inner plate to be 0 - 0.5 mm.

[A-B] 0 – 0.5 mm

(A) Chain
(B) Inner plate

NOTICE

Shift the front derailleur and the rear derailleur to all gears to make sure that the chain does not contact the chain guide.

TECH TIPS

- The adjustable range is 37 steps. (18 steps inward and 18 steps outward from the initial position)
- When adjusting, the chain guide will overrun slightly and then move back in an exaggerated manner to help in verifying the adjustment direction. Make sure to check the positions of the chain guide and the chain when the chain guide has come to a stop.
- The shifting switch on SW-R9160 (L)/ SW-R9160 (R) can also be used to perform the operation shown to the left.

5

EW-RS910

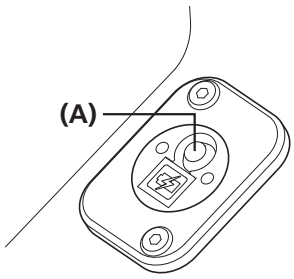

Press the button at junction A until the two LEDs turn off in order to switch from adjustment mode to gear shifting mode.

(A) Button

TECH TIPS

SM-EW90-A/B can also be switched to gear shifting mode by operating the button the same way.

Top position electrical adjustment

For drop handlebar type

1

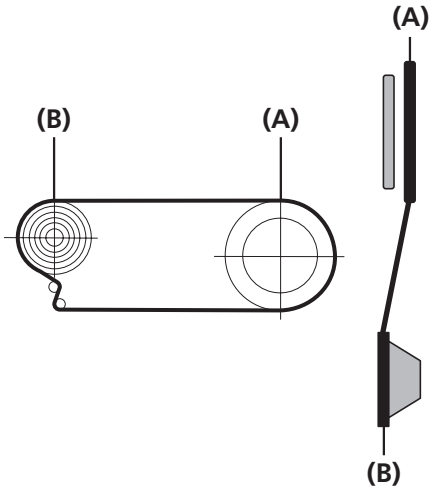

Set the chain onto the largest chainring at the front and the largest sprocket at the rear.

(A) Largest chainring
(B) Largest sprocket

2

SM-EW90-A/B

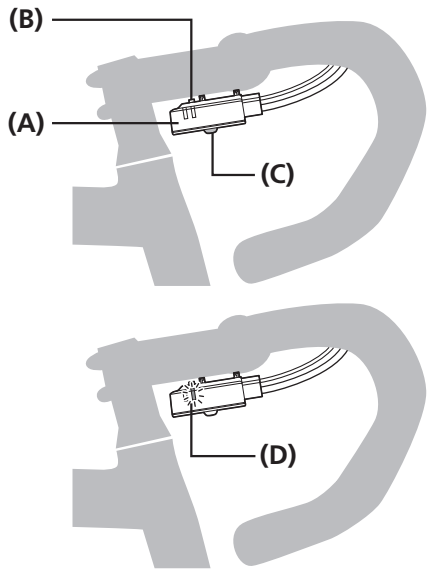

EW-RS910

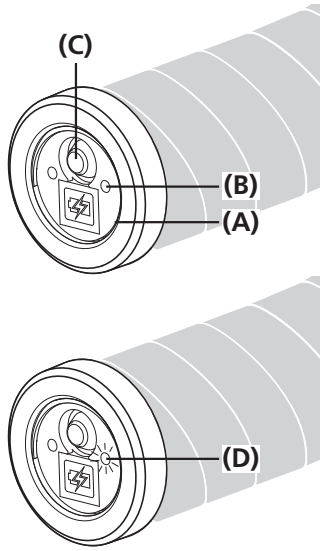

Press the button at junction A until the button LED illuminates in order to switch from gear shifting mode to adjustment mode.

(A) Junction A
(B) LED window for button
(C) Button
(D) Red LED

NOTICE

Note that if you keep pressing the button after the button LED has illuminated, RD Protection Reset will begin.

To be continued on next page

3

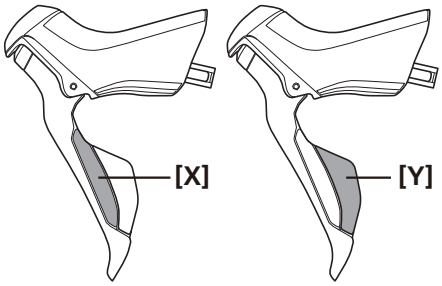

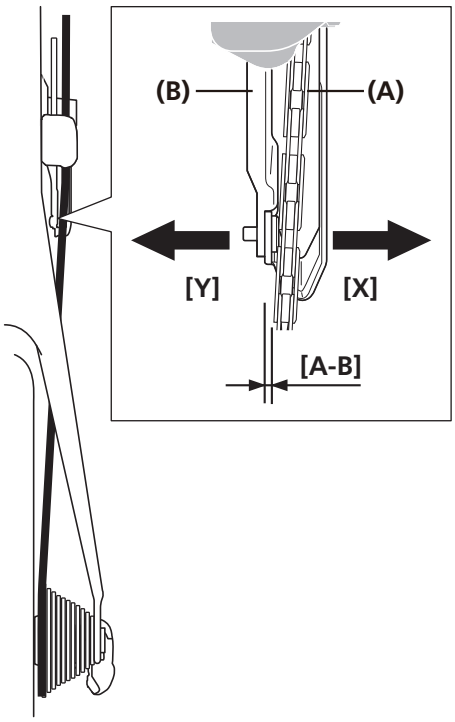

Operate shifting switch **[X]** or **[Y]**.

Adjust the gap between the chain and the inner plate to be 0 - 0.5 mm.

[A-B] 0 – 0.5 mm

(A) Chain
(B) Inner plate

NOTICE

Shift the front derailleur and the rear derailleur to all gears to make sure that the chain does not contact the chain guide.

TECH TIPS

- The adjustable range is 25 steps.
  (12 steps inward and 12 steps outward from the initial position)
- When adjusting, the chain guide will overrun slightly and then move back in an exaggerated manner to help in verifying the adjustment direction.
  Make sure to check the positions of the chain guide and the chain when the chain guide has come to a stop.

4

SM-EW90-A/B

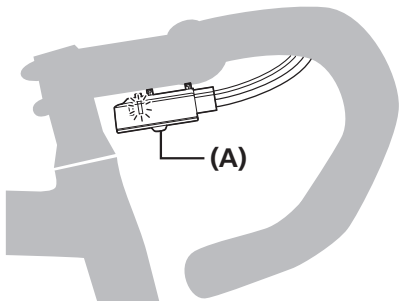

EW-RS910

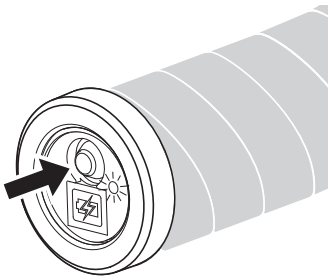

Press the button at junction A until the red LED turns off in order to switch from rear derailleur adjustment mode to gear shifting mode.

(A) Button

For time trial/triathlon handle type

1

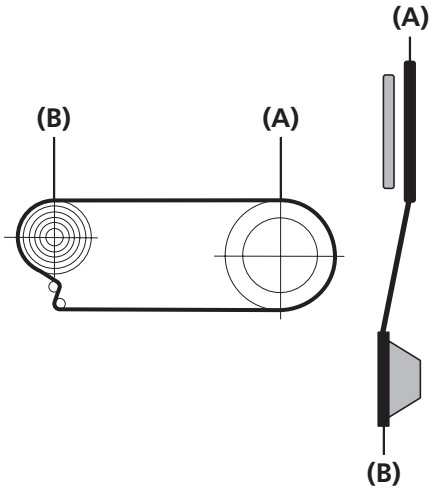

Set the chain onto the largest chainring at the front and the largest sprocket at the rear.

(A) Largest chainring
(B) Largest sprocket

TECH TIPS

- If the rear derailleur cannot be set to the largest sprocket in synchronized mode, switch to manual mode before setting the rear derailleur to the largest sprocket.
- E-TUBE PROJECT can be used to set the chain to the largest chainring and largest sprocket.

2

EW-RS910

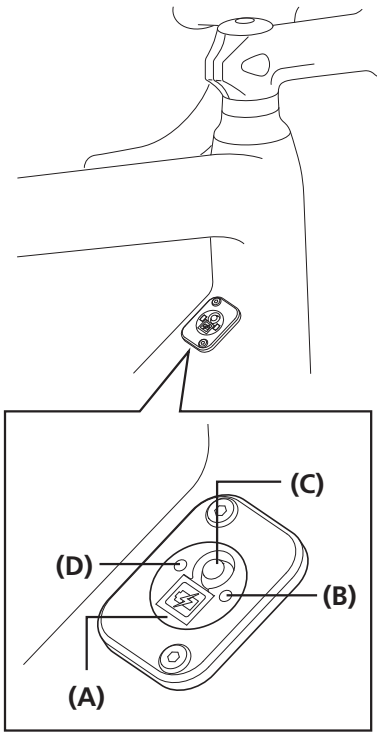

Press the button at junction A until the button LED illuminates in order to switch from gear shifting mode to adjustment mode.

(A) Junction A
(B) LED window for button
(C) Button
(D) Battery level display LED

NOTICE

Note that if you keep pressing the button after the button LED has illuminated, RD Protection Reset will begin.

TECH TIPS

SM-EW90-A/B can also be switched to adjustment mode by operating the button the same way.

3

Double-click the button at junction A, and switch to front derailleur adjustment mode.

TECH TIPS

When you switch to front derailleur adjustment mode, the battery level display LED flashes red.

To be continued on next page

4

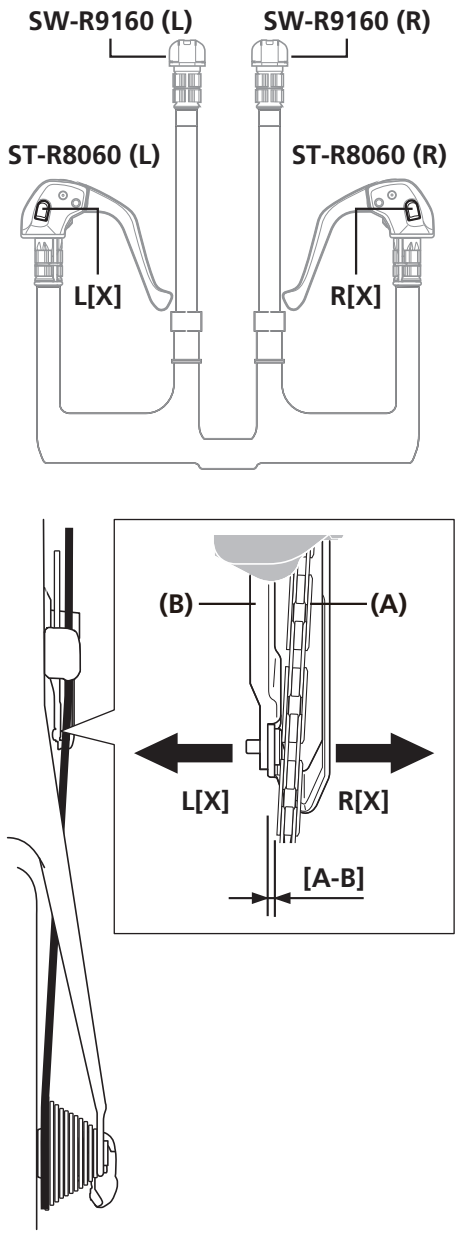

Operate shifting switch **R[X]** or **L[X]**.

Adjust the gap between the chain and the inner plate to be 0 - 0.5 mm.

[A-B] 0 – 0.5 mm

(A) Chain
(B) Inner plate

NOTICE

Shift the front derailleur and the rear derailleur to all gears to make sure that the chain does not contact the chain guide.

TECH TIPS

- The adjustable range is 25 steps.
  (12 steps inward and 12 steps outward from the initial position)
- When adjusting, the chain guide will overrun slightly and then move back in an exaggerated manner to help in verifying the adjustment direction.
  Make sure to check the positions of the chain guide and the chain when the chain guide has come to a stop.
- The shifting switch on SW-R9160 (L)/ SW-R9160 (R) can also be used to perform the operation shown to the left.

5

EW-RS910

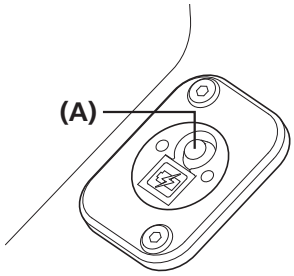

Press the button at junction A until the two LEDs turn off in order to switch from adjustment mode to gear shifting mode.

(A) Button

TECH TIPS

SM-EW90-A/B can also be switched to gear shifting mode by operating the button the same way.

Adjustment of lever stroke

ST-R8050

1

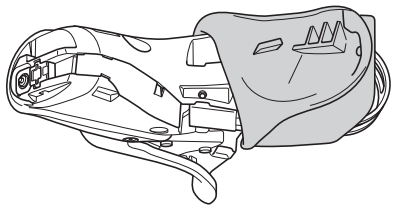

Turn over the bracket cover from the front side.

2

Adjust the position of the lever body using the reach adjustment screw.

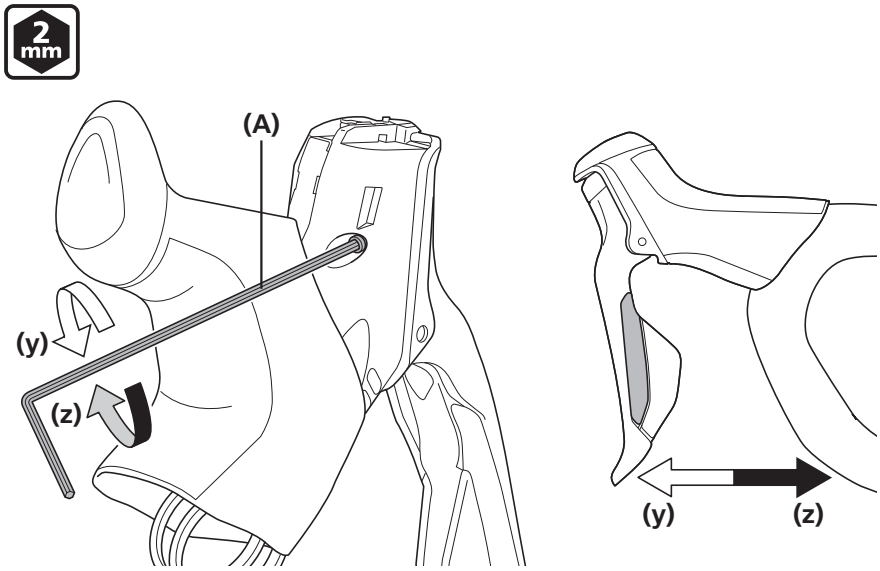

(y) Counterclockwise:
Increases the lever stroke

(z) Clockwise:
Decreases the lever stroke

(A) 2 mm hexagon wrench

NOTICE

Make sure that braking operates properly after the adjustment.

ST-R8060

Adjust the position of the lever body using the reach adjustment bolt.

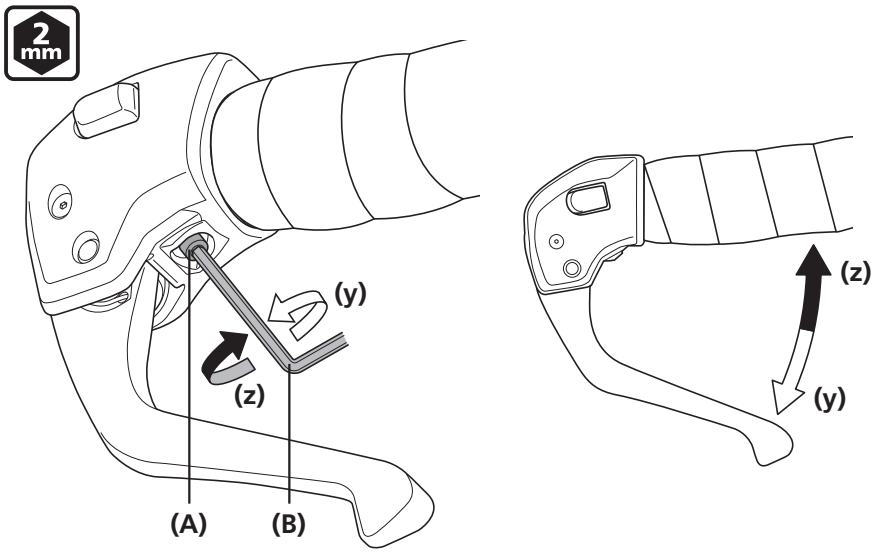

(y) Counterclockwise:
Increases the lever stroke

(z) Clockwise:
Decreases the lever stroke

(A) Reach adjustment bolt
(B) 2 mm hexagon wrench

NOTICE

Make sure that braking operates properly after the adjustment.

ST-R8070/ST-R8071

Adjust the position of the lever body using the reach adjustment bolt.

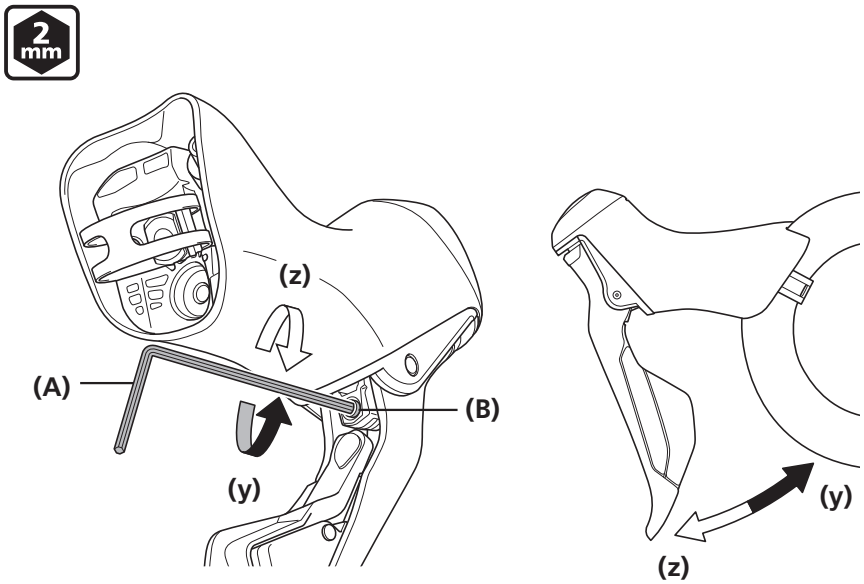

(y) Counterclockwise:
Decreases the lever stroke

(z) Clockwise:
Increases the lever stroke

(A) 2 mm hexagon wrench
(B) Reach adjustment bolt

NOTICE

Make sure that braking operates properly after the adjustment.

■ Free stroke adjustment (ST-R8070/ST-R8071)

1	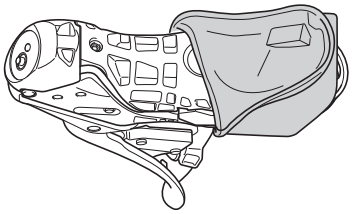	Turn over the bracket cover from the front side.
2	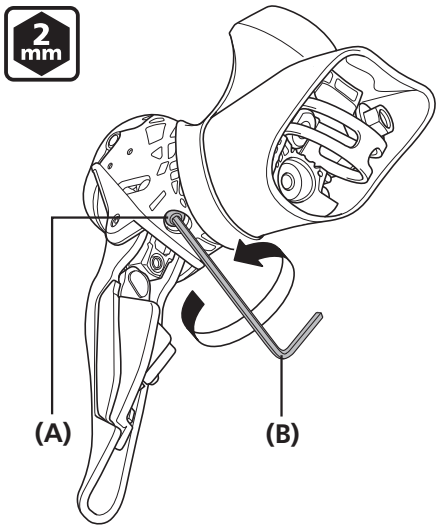	Turn the free stroke adjustment screw to adjust the stroke. Turning in the direction shown in the illustration increases the free stroke.

(A) Free stroke adjustment screw
(B) 2 mm hexagon wrench

NOTICE

- Stop loosening the free stroke adjustment screw when the free stroke stops increasing.
  Loosening the free stroke adjustment screw excessively may cause the screw to be removed from the bracket unit.
  Do not forcibly tighten the free stroke adjustment screw. Otherwise, the adjustment screw may be damaged.
- Do not remove the washer from the free stroke adjustment screw.
- Position the free stroke adjustment screw so that it does not interfere with the bracket cover.

CHARGING THE BATTERY

CHARGING THE BATTERY

Use the specified combination of lithium ion batteries, chargers, and linkage devices.
Any other combinations may cause rupture or fire.
Fully understand the precautions for use provided at the beginning of the dealer's manual before using the products.

Names of parts

External type (SM-BCR1/SM-BTR1)

Charger (SM-BCR1)

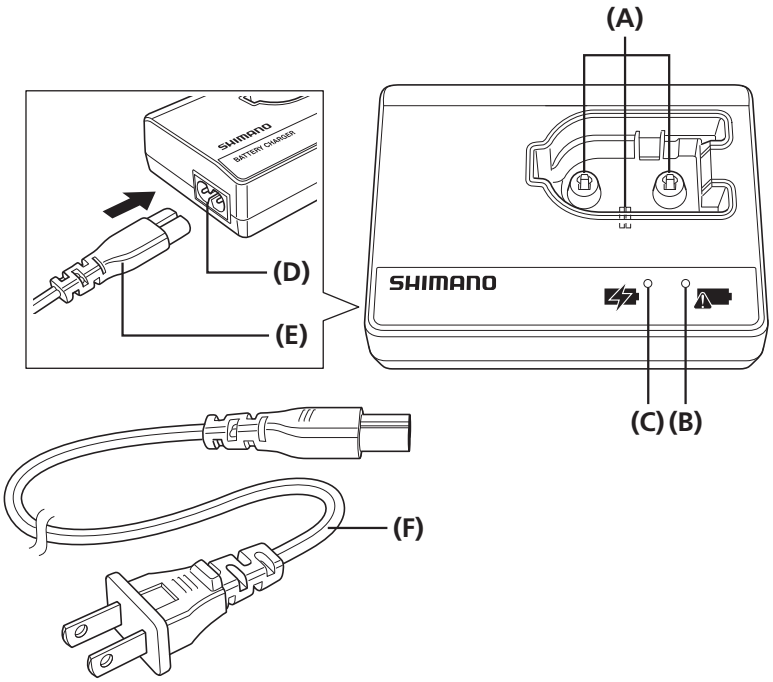

(A) Electrical contacts:
If these are modified or damaged, problems with operation will occur. Be very careful when handling them.

(B) ERROR indicator:
This flashes when there is an error.

(C) CHARGE indicator:
This illuminates while charging is in progress.

(D) Power cord connector

(E) Power cord:
Insert into the connector.
(Insert all the way)

(F) Charger cord (Sold separately)

TECH TIPS

This is a special charger for charging SHIMANO lithium ion batteries (SM-BTR1).

Special battery (SM-BTR1)

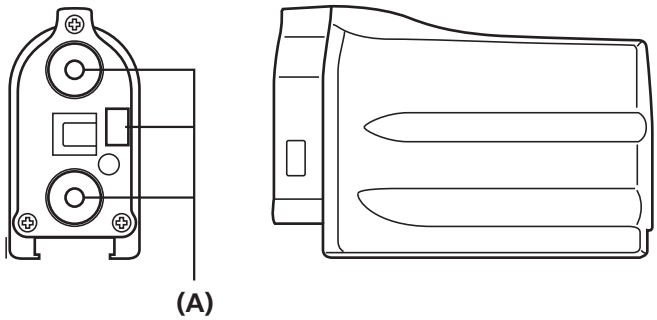

(A) Electrical contacts:
If these are modified or damaged, problems with operation will occur. Be very careful when handling them.

TECH TIPS

This is a lithium ion battery.
Use the special charger (SM-BCR1) to charge the battery.

Built-in type (SM-BCR2/SM-BTR2, BT-DN110/BT-DN110-A)

USB cable

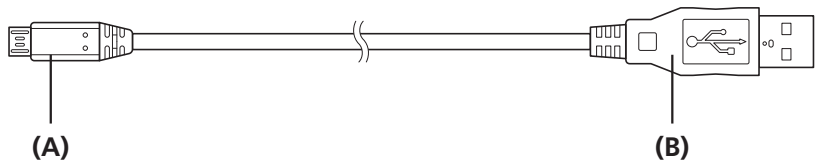

(A) Micro USB plug:
Connect to the battery charger.

(B) USB plug:
Connect to a PC USB port or an AC adapter with a USB port.

Charger (SM-BCR2)

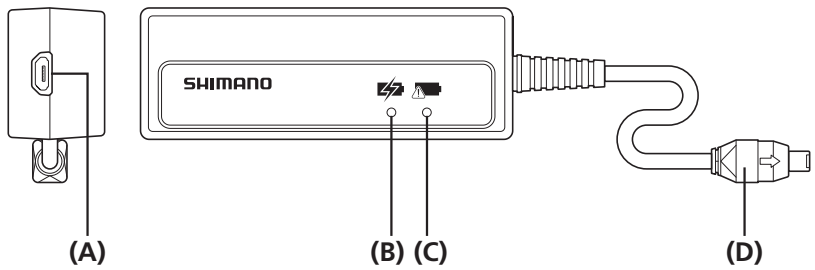

(A) Micro USB connector
(B) CHARGE indicator
(C) ERROR indicator
(D) Plug for product connection:
Connect to junction A.

TECH TIPS

- This is a special charger for charging SHIMANO lithium ion batteries (SM-BTR2/BT-DN110/BT-DN110-A).
- If water collects in the product connector, connect the plug only after wiping it off.

Special battery (SM-BTR2/BT-DN110/BT-DN110-A)

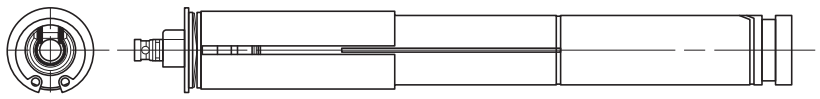

TECH TIPS

This is a lithium ion battery.
Use the special charger (SM-BCR2) to charge the battery.

Charging method

External type (SM-BCR1/SM-BTR1)

1 Insert the power plug of the battery charger into an electrical outlet.

2

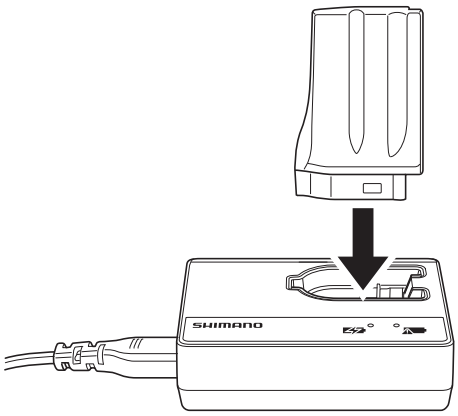

Insert the battery (SM-BTR1) into the battery charger (SM-BCR1) as far as it will go.

TECH TIPS

Charging takes up to approximately 1.5 hours. (Note that the actual time will vary depending on the remaining battery charge.)

3

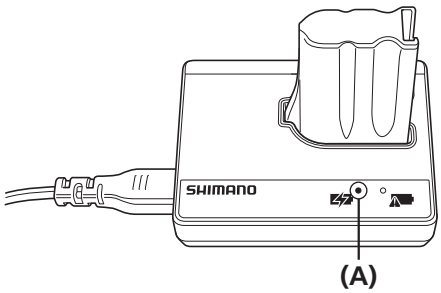

When the CHARGE indicator (orange) switches off, charging is complete.

(A) CHARGE indicator

TECH TIPS

If the ERROR indicator flashes, it means that there may be a problem with the battery. Refer to "When charging is not possible" for more information.

4 Disconnect the power plug of the battery charger from the electrical outlet and store the battery charger in a suitable place as specified in the Safety Precautions.

Built-in type (SM-BCR2/SM-BTR2, BT-DN110/BT-DN110-A)

1

Connect the battery to the junction A.

TECH TIPS

- The battery can be charged by using an AC adapter with a USB port or connecting the charger to the USB connector of a PC.

2

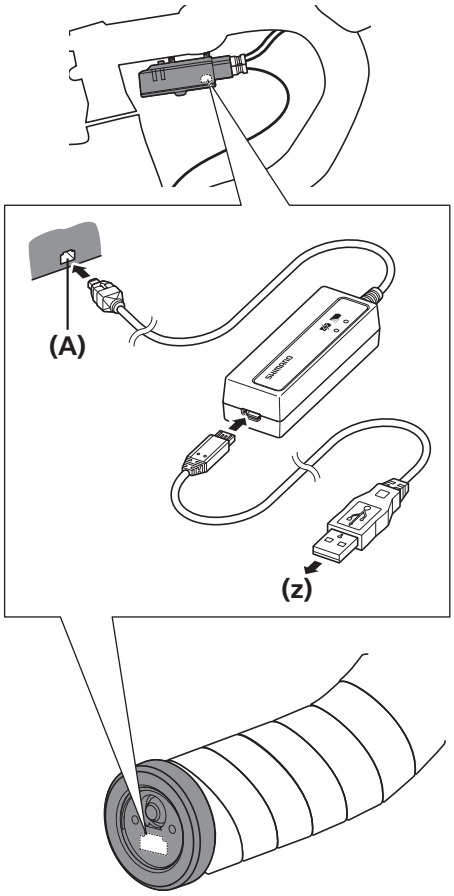

Connect the charging cable of the charger to the junction A.

(z) To an AC adapter with a USB port or PC

(A) Charging port

TECH TIPS

- The position of the charging port differs depending on the product.
- The charging time of an AC adapter with a USB port is about 1.5 hours, and that of computer USB port type about 3 hours. (Note that the actual time will vary depending on the amount of charge remaining in the battery. Depending on the specifications of the AC adapter, recharging via the AC adapter may require as much time (about 3 hours) as recharging via PC.)

3

When the CHARGE indicator (orange) switches off, charging is complete.

TECH TIPS

If ERROR indicator or CHARGE indicator blinks, refer to "When charging is not possible".

4

Disconnect the charging cable or USB cable, and keep it at the location specified in the precautions.

When charging is not possible

■ When charging is not possible

External type (SM-BCR1/SM-BTR1)

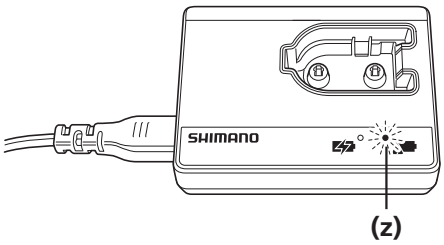

Remove the battery from the battery charger, disconnect the power plug of the battery charger from the electrical outlet, and then repeat the charging operation.

If charging is still not possible after the above steps have been carried out, the ambient temperature may be too low or too high, or there may be a problem with the battery.

(z) If charging is not possible, the ERROR indicator on the Battery charger will flash.

When charging is not possible

Built-in type (SM-BCR2/SM-BTR2, BT-DN110/BT-DN110-A)

1 Make sure that only one unit of SM-BCR2 is connected to a PC.

2

If the ERROR indicator blinks

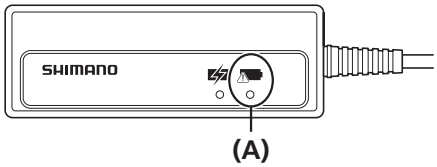

If the ERROR indicator blinks, the ambient temperature during charging may fall outside the operating temperature limits.

Check that the temperature is appropriate.

(A) ERROR indicator

If the CHARGE indicator blinks

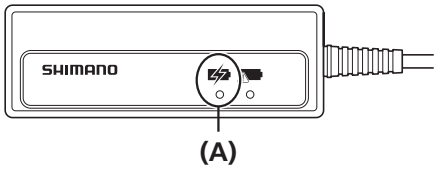

If the CHARGE indicator blinks, refer to the following.

- The current capacity of your AC adapter with a USB port is lower than 1.0Adc.
  ⇨Use an AC adapter with a USB port with a current capacity equal to or higher than 1.0Adc.
- Connection is using a USB hub.
  ⇨Remove the USB hub.

(A) CHARGE indicator

3 If none of the above (1 to 2) is the case, the battery or junction may be faulty.

NOTICE

If the CHARGE indicator does not light up or goes out soon, the battery may be fully charged. Check the remaining charge in the battery via junction A or the system information display.
If the battery is low or dead, contact the place of purchase or a bicycle dealer.

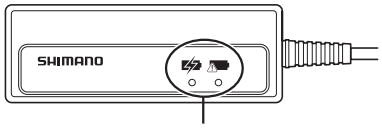

If it becomes impossible to charge, the CHARGE indicator (orange) or ERROR indicator of the battery charger will blink.

CONNECTION AND COMMUNICATION WITH DEVICES

CONNECTION AND COMMUNICATION WITH DEVICES

Connecting the bicycle (system or components) to a device enables such operations as updating system firmware and customization.

You need E-TUBE PROJECT to configure the system and update firmware.

Download E-TUBE PROJECT from our support website (**https://bike.shimano.com/e-tube/project.html**).

For information on how to install E-TUBE PROJECT, check the support website.

TECH TIPS

You need SM-PCE02 and SM-JC40/JC41 to connect the system to a PC. They are not required if there is an available port.
Firmware is subject to change without notice.

NOTICE

If your version of E-TUBE PROJECT and the firmware for each component are not up to date, there could be problems operating the bicycle. Check the versions and update them to the latest ones.

■ Settings customizable in E-TUBE PROJECT

Display settings	**Display time**	Sets the time until the display turns off when the display monitor is left unattended.
Switch function setting		Modify the shift switch settings.
Shift mode setting		Change shift mode setting.
Multi-shift mode setting	**Multi-shift mode ON/OFF**	Select whether or not to use multi-shift.
	Gear-shifting interval	Sets the gear-shifting interval for multi-shift.
	Gear number limit	Sets the limit on the number of gears shifted when the shifting switch is held down.

Settings customizable in E-TUBE PROJECT

Shift mode setting (synchronized shifting)

Synchronized shift is a function that maintains optimal front and rear gear positioning by interlinking the shifting of the front and rear derailleurs. There are two Synchronized shift modes, as explained below.

Semi-synchronized shift

Mechanics
The rear derailleur automatically shifts when the front derailleur is shifted.

The rear derailleur can be set to jump from 0 to 4 gears per shift. (Default setting: 2 gears)

Shifting from largest to smallest chainring
The rear derailleur jumps 0 to 4 gears outward per shift. (Default setting: 2 gears)

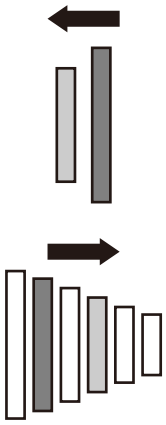

Shifting from smallest to largest chainring
The rear derailleur jumps 0 to 4 gears inward per shift. (Default setting: 2 gears)

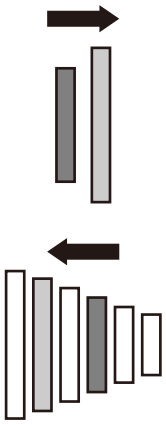

NOTICE

Values that can be actually set for number of gears to jump depend on chainring and sprocket size combinations.

Synchronized shift

Mechanics
The front derailleur automatically shifts when the rear derailleur is shifted.
(The shift points are initially set as shown in the table.)

Initial settings

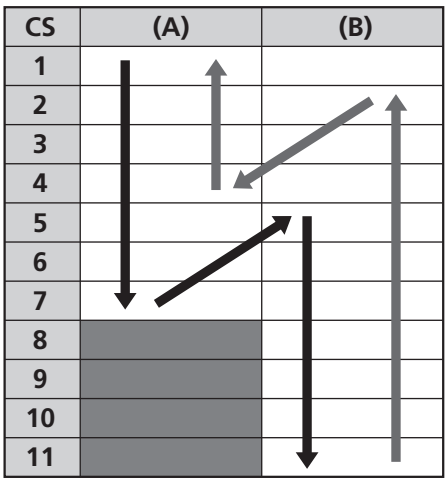

(A) Smallest chainring
(B) Largest chainring

MAINTENANCE

MAINTENANCE

■ Replacing the bracket cover

ST-R8050/ST-R8070/ST-R8071

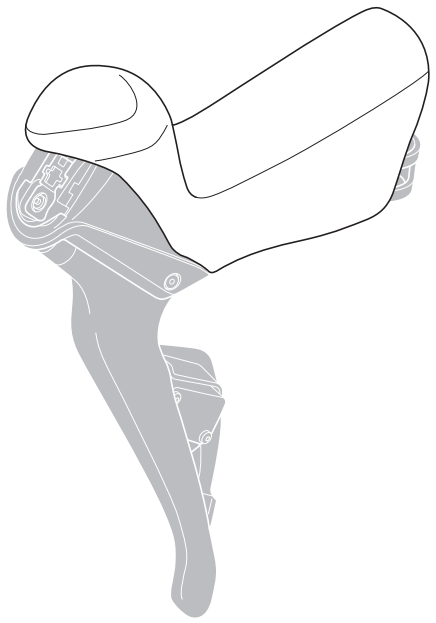

Fit the tabs on the bracket cover into the slots on the bracket unit.

NOTICE

Note the markings
R: for right
L: for left

* The markings can be found on the inner surface of the bracket cover.

ST-R8050
Always replace the bracket cover with the lever removed from the bicycle as shown in the illustration.

ST-R8070/ST-R8071
- Replace the bracket cover with the dual control lever and brake hose removed from the bicycle as shown in the illustration. Alternatively, remove the brake caliper from the frame and pass the bracket cover from the caliper side.
- Perform bleeding after removing the brake hose.

TECH TIPS

- Wipe a little rubbing alcohol inside the bracket cover to make fitting it easier.
- The tabs on the bracket cover each fit to a matching slot on the bracket.

■ Disassembly of the bracket body and lever body (ST-R8050)

1

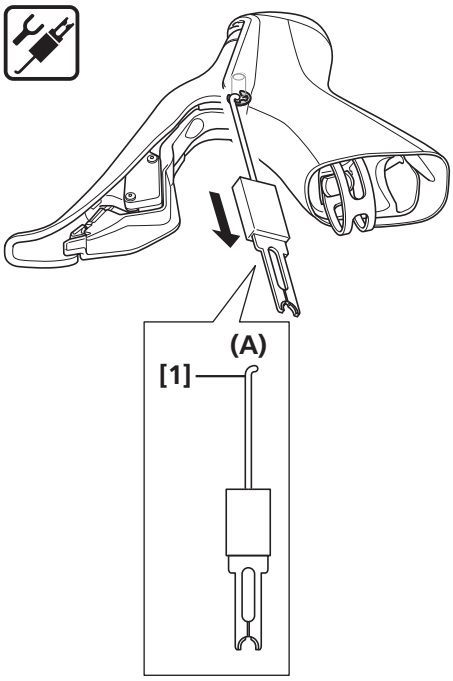

Use the SHIMANO original tool which is sold separately to remove the snap ring.

Hook section **[1]** of the SHIMANO original tool on the snap ring and remove it.

(A) Special snap ring removal tool Y6RT68000

⚠ CAUTION

- **When you remove the snap ring, it may pop out; wear protective glasses while removing it. Check that there is no one or no object around you before starting the work.**
- The bracket body and lever body of ST-R8070 cannot be disassembled.

2

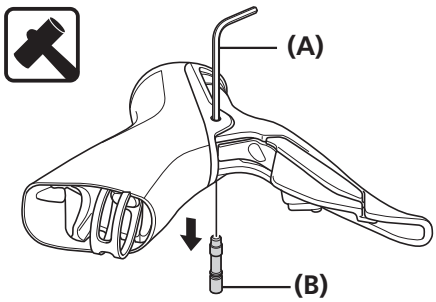

Insert a hexagon wrench or a similar tool into the hole in the lever axle, and then tap it with a soft face mallet to push out the lever axle.

(A) Hexagon wrench
(B) Lever axle

3

Pull back the bracket cover from the front and remove the return spring using a snap ring removal tool or similar tool.

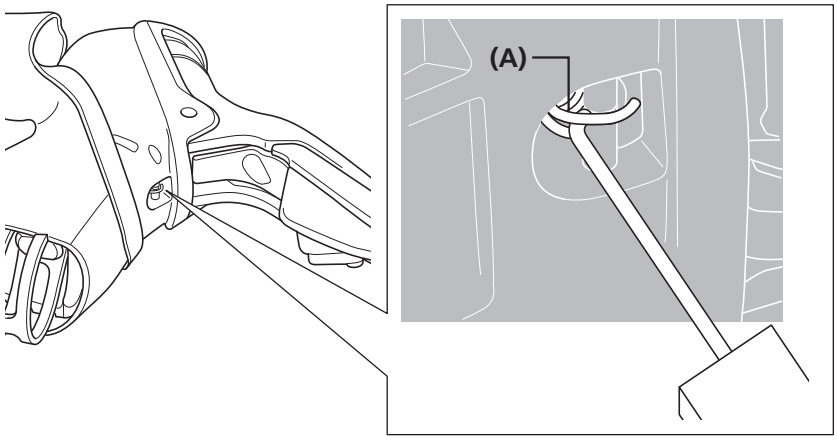

(A) Return spring

To be continued on next page

4

The lever body can be disassembled from the bracket body by removing the two switch unit fixing screws and then removing the switch unit with the switch return spring and the switch springs.

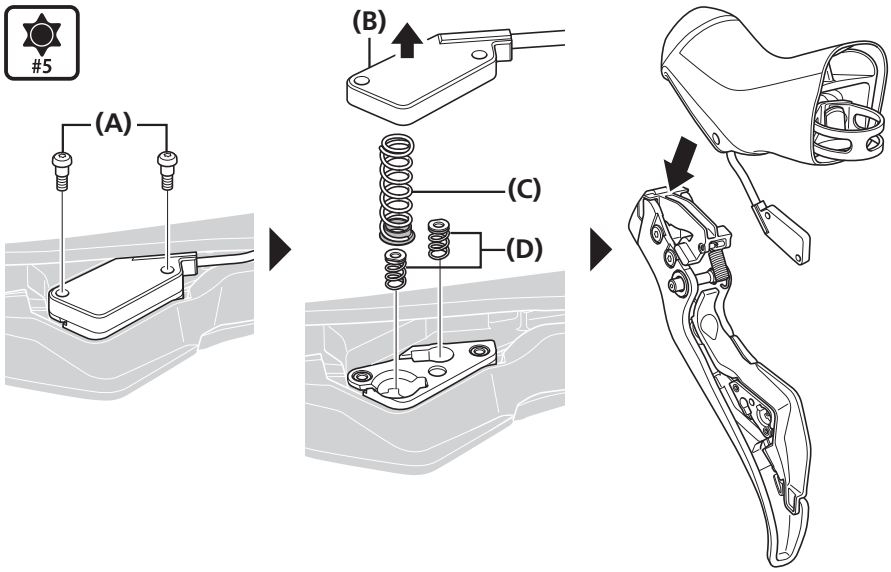

(A) Switch unit fixing screw (Hexalobular[#5])
(B) Switch unit
(C) Switch return spring
(D) Switch springs

NOTICE

When removing the switch unit, the switch unit may be thrust open by the switch return spring or the switch return spring may fly out. Make sure to hold down the switch unit and remove it gradually.

■ Assembly of the switch unit

1

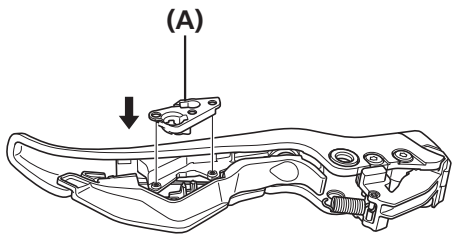

Attach the switch unit setting plate to the lever.

(A) Switch unit setting plate

2

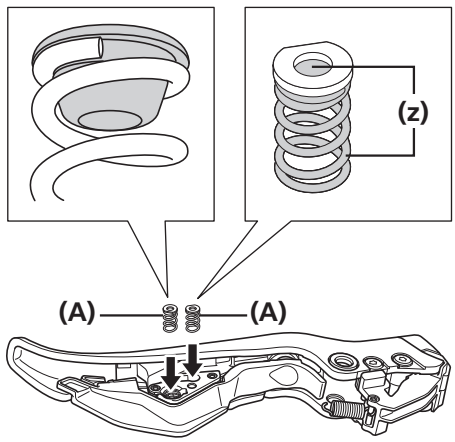

Check that the buttons are attached to the springs, then insert the switch springs into the holes in the switch unit setting plate.

(z) Applying grease
Premium Grease
(Y-04110000)

(A) Switch spring

3

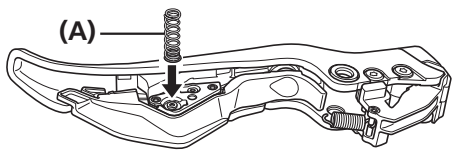

Set the switch return spring in the hole in the switch unit setting plate, as shown in the illustration.

(A) Switch return spring

To be continued on next page

4

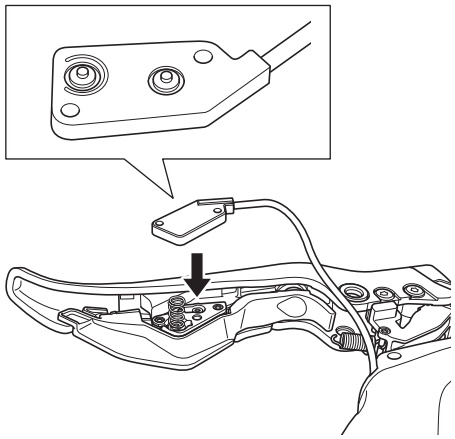

Place the switch unit onto the mounting surface of the setting plate.

5

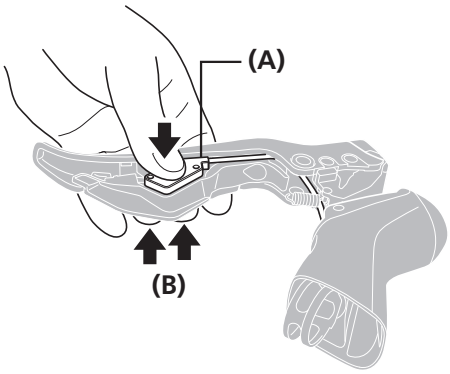

Press the switch unit by hand so that the switch springs go into the grooves in the buttons, and then push the shifting switches **[X]** and **[Y]** in as far as they will go.

(A) Switch unit
(B) Shifting switches **[X]** **[Y]**

6

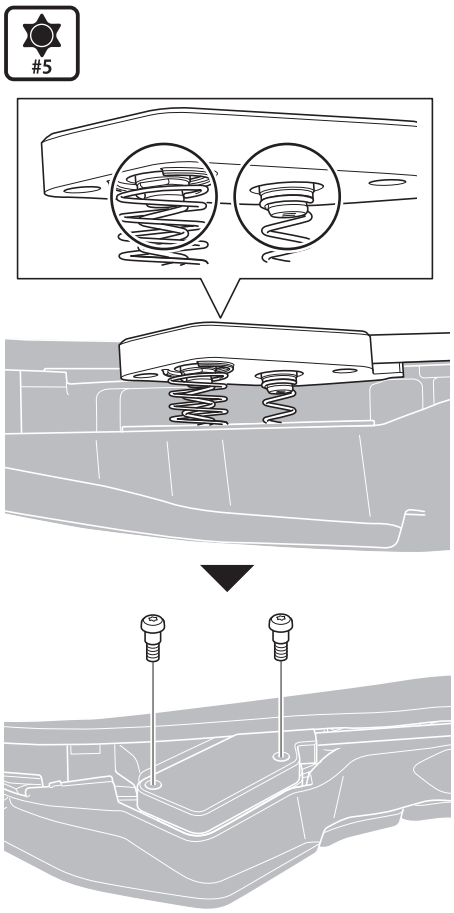

Make a gap between the switch unit and the setting plate and check that the end of the rubber on the switch unit is on the button.

Tightening torque	
#5	0.1 N·m

Assembly of the bracket body and lever body

1

Assemble the bracket body and the lever body, and then attach the return spring.

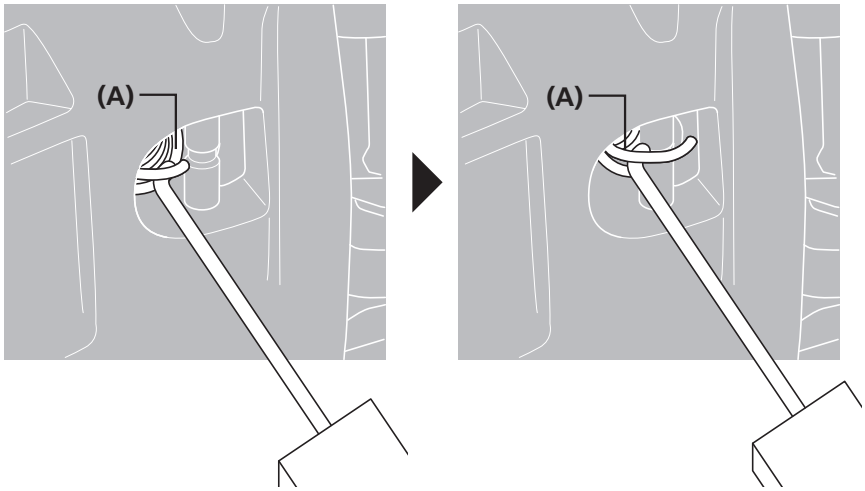

(A) Return spring

2

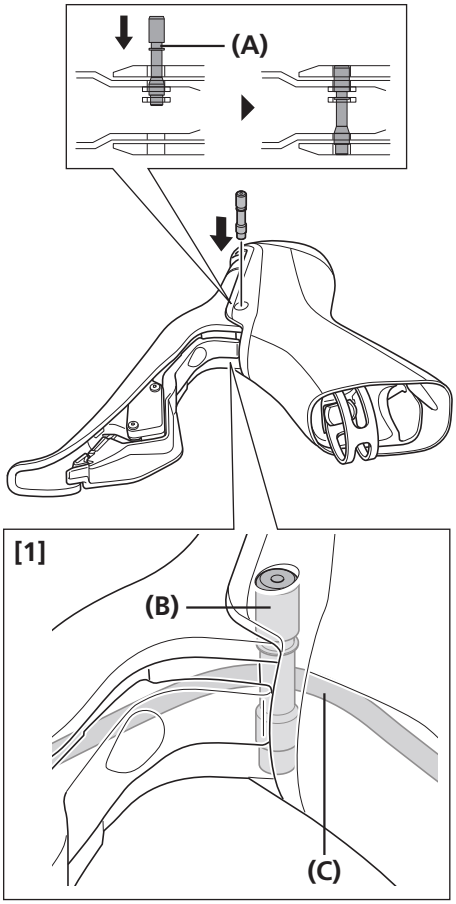

Align the axle holes, and then press-fit the lever axle.

Make sure to route the cable from the switch unit behind the lever axle, as shown in illustration **[1]**.

(A) Snap ring groove
(B) Lever axle
(C) Cable

TECH TIPS

- The correct direction for the lever axle is for the snap ring groove to face up.
- Check that the surface of the bracket body and the top end of the lever axle are flush with each other so that the snap ring will fit into the groove.

To be continued on next page

3

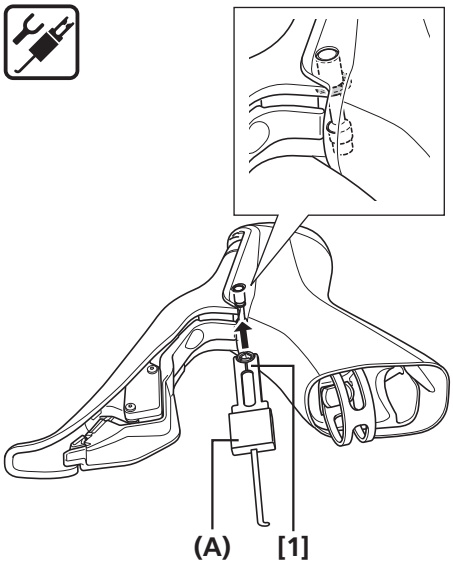

Use part **[1]** of the SHIMANO original tool to install the snap ring.

(A) Special snap ring removal tool

NOTICE

Do not use the removed snap ring again.
Be sure to use a new product (Y46RU41100: service parts code).

TECH TIPS

Operate the shifting switches **[X]** and **[Y]** to check that they turn on, and check that the lever operates smoothly.

Replacement of the pulley

Replace pulleys using a 3 mm hexagon wrench.

The guide pulley and tension pulley are marked on one side with arrows to indicate the direction of rotation.

When attaching the pulleys, make sure to orient them so that the sides marked with arrows are visible when viewed from the reverse side of the derailleur, as shown in the illustration.

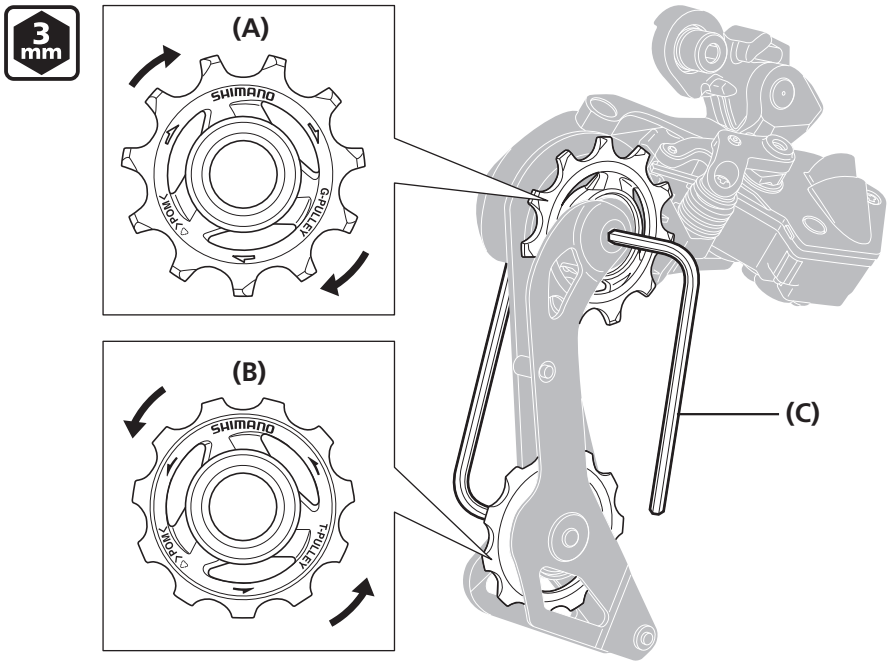

(A) Guide pulley
(B) Tension pulley
(C) 3 mm hexagon wrench

Tightening torque	
3 mm	2.5 - 5 N·m

■ Replacement of the plate and the plate tension spring

Removal

1

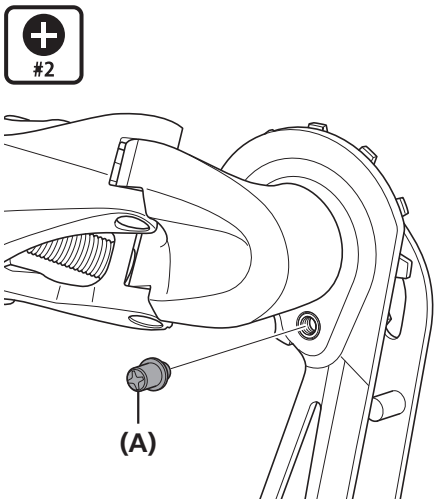

Remove the plate stopper pin.

(A) Plate stopper pin

Tightening torque	
#2	1 N·m

2

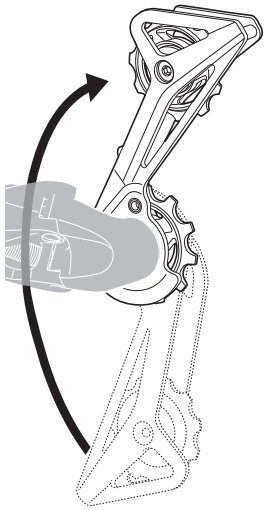

Turn the plate to loosen the plate tension spring as shown in the illustration.

3

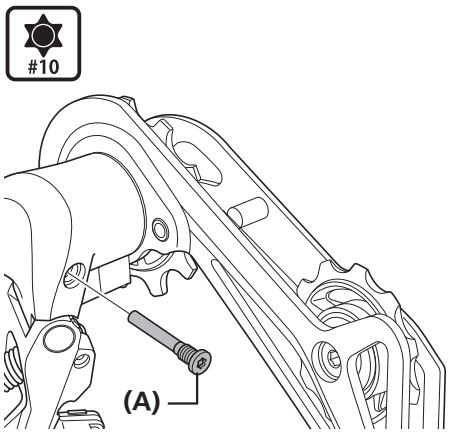

Using a Hexalobular[#10], remove the stopper bolt.

(A) Stopper bolt

Tightening torque	
#10	1 N·m

To be continued on next page

4	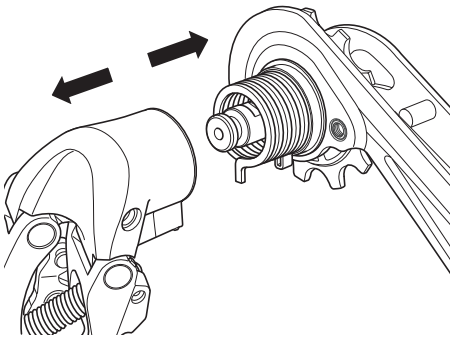	Detach the plate.

Cautions when assembling

Assemble by carrying out the removal procedure in reverse while adhering to the following cautions.

1	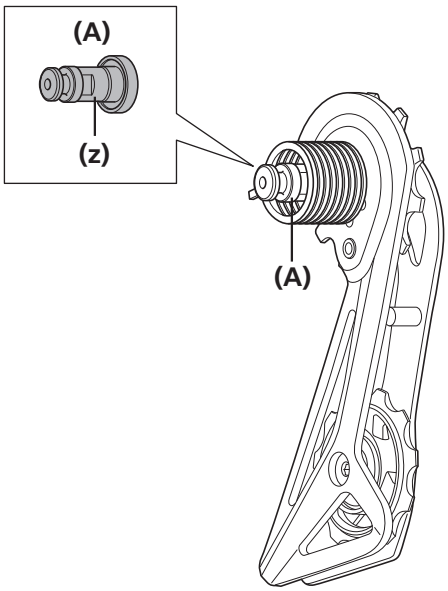	Apply grease to the plate axle. **(z)** Apply grease.	**(A)** Plate axle
2	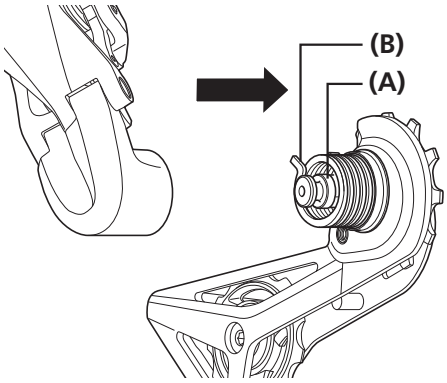	When reassembling, insert the end of the plate tension spring into the groove in the plate.	**(A)** Plate axle **(B)** Plate tension spring

Replacing the brake pads

1

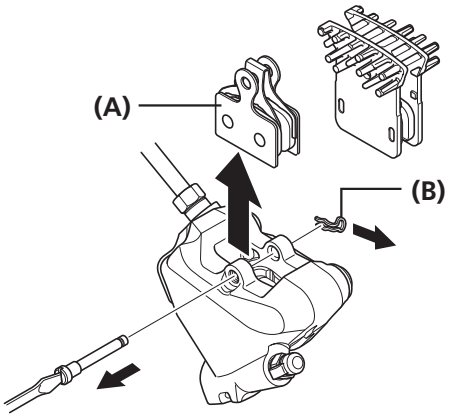

Remove the wheel from the frame, and remove the brake pads as shown in the illustration.

(A) Brake pads
(B) Retaining clip

NOTICE

- This brake system is designed to automatically adjust the clearance between the disc brake rotor and the brake pads by the piston gradually protruding according to the wear of the brake pads. When you replace the brake pads, you need to push back the piston.
- If oil adheres to the brake pads after oil is added, or if the brake pads are worn down to a thickness of 0.5 mm, or if the brake pad presser springs are interfering with the disc brake rotor, replace the brake pads.
- When using a pad with fins, take note of the left (L) and right (R) markings to set it.

2

Clean the pistons and surrounding area.

3

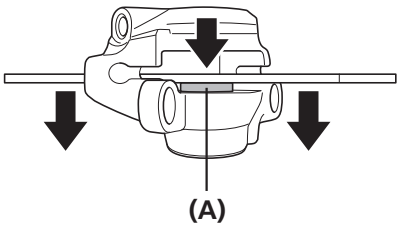

Use a flat-shaped tool to push the pistons straight back in as far as they will go, while being careful not to twist the pistons.

Do not push the pistons with a sharp tool.

The pistons may be damaged.

(A) Piston

To be continued on next page

4

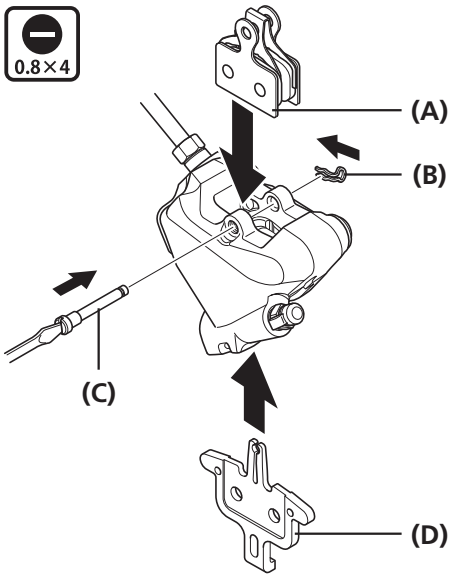

Install the new brake pads, the bolt, and the pad spacer (red).

At this point, make sure to install the retaining clip as well.

(A) Brake pads
(B) Retaining clip
(C) Pad axle
(D) Pad spacer (red)

Tightening torque	
0.8×4	0.1 - 0.3 N·m

TECH TIPS

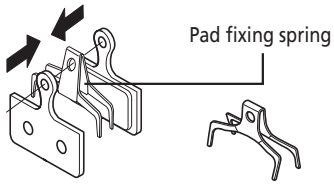

Install the pad fixing spring as shown in the illustration.

5

Depress the brake lever several times to check that the operation becomes stiff.

6

Remove the pad spacer, install the wheel, and then check that there is no interference between the disc brake rotor and caliper.

If they are touching, adjust in accordance with section "Installing the brake caliper".

■ Replacing SHIMANO hydraulic mineral oil

It is recommend to change your oil when the oil in the reservoir tank becomes noticeably discolored.
After attaching the bag and tube to the bleed nipple, open the bleed nipple and drain the oil. At this time, operate the dual control lever to make draining the oil easier. After draining the oil, refer to “Adding SHIMANO hydraulic mineral oil and bleeding air”, then lubricate with oil from a newly opened container. Use only SHIMANO hydraulic mineral oil.

⚠ CAUTION

- Note the following cautions when handling SHIMANO hydraulic mineral oil:
  - Do not drink. May cause vomiting or diarrhea.
  - Keep out of reach of children.
  - Do not cut, let near heat, weld or pressurize the SHIMANO hydraulic mineral oil container. Doing so may cause an explosion or fire.
  - Disposal of used oil: Follow local county and/or state codes for disposal. Use caution when preparing the oil for disposal.
  - Directions: Keep the container sealed to prevent foreign objects and moisture from getting inside, and store it in a cool, dark area away from direct sunlight or heat. Keep from heat or flame
  - For cleaning brake hoses exposed to SHIMANO hydraulic mineral oil, or cleaning and maintaining tools, use isopropyl alcohol or a dry cloth. Do not use commercially available brake cleaners. Doing so may cause damage to plastic parts.

Replacing SHIMANO hydraulic mineral oil (ST-R8071)

■ Replacing SHIMANO hydraulic mineral oil (ST-R8071)

For details on replacing SHIMANO hydraulic mineral oil for ST-R8071, click here (https://si.shimano.com/dm/RADBR10/replace_genuine_mineral_oil).

SHIMANO NORTH AMERICA BICYCLE, INC.
One Holland, Irvine, California 92618, U.S.A. Phone: +1-949-951-5003

SHIMANO EUROPE B.V.
High Tech Campus 92, 5656 AG Eindhoven, The Netherlands Phone: +31-402-612222
Only EU General Contact : contactshimano@shimano-eu.com

SHIMANO INC.
3-77 Oimatsu-cho, Sakai-ku, Sakai City, Osaka 590-8577, Japan

Please note: specifications are subject to change for improvement without notice. (English)
© May 2026 by SHIMANO INC. ITP