Dealer's Manual

ROAD	GRAVEL	MTB
E-BIKE	LIFESTYLE	GENERAL

Wheel Set (Disc Brake)

XTR

WH-M9200
WH-M9220

DEORE XT

WH-M8200

Contents

IMPORTANT NOTICE 3

TO ENSURE SAFETY 4

List of tools to be used 7

Installation/removal 8

Tire size 8

Installing the spoke protector 9

- CP-WM92A 9

Installing/removing the cassette 11

Installing the rotor 12

Removing the rotor 13

Maintenance 14

Spoke lacing 14

- WH-M9200 14
- WH-M9220 15
- WH-M8200 15

Replacing the spokes 17

- WH-M9200 17
- WH-M9220 18
- WH-M8200 19

Replacing tubeless tape 20

Front hub disassembly 23

Front hub assembly 27

Pre-work cautions 31

Freehub disassembly 32

Freehub assembly 41

Replacing the freewheel body unit 50

Installing and removing the tubeless tires 51

- Installation 51
- Removal 53
- Installing an inner tube 54

IMPORTANT NOTICE

- **This dealer's manual is intended primarily for use by professional bicycle mechanics.**

  Users who are not professionally trained for bicycle assembly should not attempt to install the components themselves using the dealer's manuals.

  If any part of the information on the manual is unclear to you, do not proceed with the installation. Instead, contact your place of purchase or a distributor for assistance.
- Make sure to read all manuals included with each product.
- Do not disassemble or modify the product other than as stated in the information contained in this dealer's manual.
- All manuals and technical documents are accessible online at https://si.shimano.com .
- For consumers who do not have easy access to the internet, please contact a SHIMANO distributor or any of the SHIMANO offices to obtain a hardcopy of the user's manual.
- Please observe the appropriate rules and regulations of the country, state or region in which you conduct your business as a dealer.

For safety, be sure to read this dealer's manual thoroughly before use, and follow it for correct use.

The following instructions must be observed at all times in order to prevent personal injury and physical damage to equipment and surroundings.

The instructions are classified according to the degree of danger or damage which may occur if the product is used incorrectly.

DANGER	Failure to follow the instructions will result in death or serious injury.
WARNING	Failure to follow the instructions could result in death or serious injury.
CAUTION	Failure to follow the instructions could cause personal injury or physical damage to equipment and surroundings.

TO ENSURE SAFETY

⚠ WARNING

- **Be sure to follow the instructions provided in the manuals when installing the product.**

  Only use SHIMANO genuine parts. If a component or replacement part is incorrectly assembled or adjusted, it can lead to component failure and cause the rider to lose control and crash.
- Wear approved eye protection while performing maintenance tasks such as replacing components.
- When assembling the freewheel body unit, do not apply grease or oil outside of the designated areas. This may cause the freewheel body unit to malfunction.
- Do not wash the freewheel body unit. The internal grease may flow out and cause the freewheel body unit to malfunction.

Be sure to also inform users of the following:

- **Check that the wheels are fastened securely before riding the bicycle. Using the axle release lever incorrectly may cause the wheel to fall off, etc. and lead to serious injury due to a fall or collision.**
- Before riding the bicycle, check the wheels to make sure that there are no bent or loose spokes, dents, scratches or cracks on the rim surface. Do not use the wheel if any of these problems are found. The wheel may break, and you may fall. Check also that there is no carbon peeling or cracking.
- Before riding the bicycle, carefully check the wheels to make sure that there are no cracks in the axles, and if you find any unusual conditions, DO NOT use the bicycle. This wheel is not designed for downhill bicycle riding or freeriding. Depending on the riding conditions, the wheel axle could develop cracks that may result in the failure of the wheel axle, which can lead to an accident resulting in serious injury or even death.
- Do not use with rim brakes. These wheels are designed exclusively for use with disc brakes. Using these wheels with rim brakes could damage the rims and result in an accident that can lead to a serious injury or even death.
- Confirm that the axle release lever does not interfere with the rotor even when it is fully engaged. If the axle release lever is on the same side as the rotor, there is the danger that it may interfere with the rotor. If it interferes with the rotor, stop using it and consult a place of purchase or a distributor.

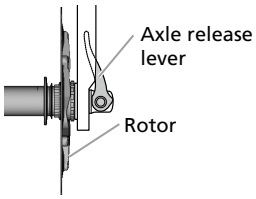

- Check how to use the axle release lever. Using the axle release lever incorrectly may cause the wheel to fall off, etc. and lead to serious injury.
- Do not touch the calipers or rotor while riding or immediately after dismounting from the bicycle. The calipers and rotor will become hot when the brakes are operated, so you may get burned if you touch them. Check that the brake system has cooled down sufficiently before attempting brake system maintenance.
- Do not allow any oil or grease to get onto the rotor or pads. Riding the bicycle with oil or grease on the rotor or pads may prevent the brakes from operating and result in serious injury due to a fall or collision.
- Read the disc brake manual carefully, and keep it in a safe place for later reference.
- For details on the E-THRU axle, refer to the E-THRU axle user's manual.

F15 (Front 15 mm Axle), R12 (Rear 12 mm Axle) wheel (Thru Axle)

- This wheel can only be used in combination with the special front fork/frame and the through axle. If it is used in combination with any other front fork/frame or through axle, it may cause the wheel to become detached from the bicycle during riding and result in serious bodily injury.

TL: Tubeless wheel

- The tires should be installed and removed by hand. If this is difficult, a resin tire lever for tubeless wheels may be used. In such cases, be sure to check that the rim surface has not been dented, scratched, or cracked as there is a risk of causing damage to the air seal between the tire and the rim, which would result in air leakage. For carbon rims, check that there is no carbon peeling or cracking, etc. Finally, make sure that there is no air leakage.
- Use the appropriate air pressure indicated on the tire and rim. If the maximum pressures indicated on the tires and rims differ, be sure not to exceed the maximum pressure with the lower value. A higher pressure than indicated can cause a sudden puncture and/or sudden release of the tire, which can result in serious injury.

  WH-M9200-TL / WH-M9220-TL / WH-M8200-TL: Maximum pressure = 2.5 bar / 36 psi / 250 kPa

For installation to the bicycle and maintenance

- When installing the wheel to the front suspension fork/frame, always be sure to follow the instructions given in the manual for the front suspension fork/frame. The securing method and tightening torque for the wheel both vary depending on the type of front suspension fork/frame being used. If the instructions are not followed, the wheel may fall out and possibly result in serious injury. When the wheel is secured in accordance with the tightening torque, the wheel's rotation may become stiff; however, the instructions in the manual for front suspension fork/frame must always be followed.

⚠ CAUTION

Be sure to also inform users of the following:

- If you will be using tire sealant, consult the place of purchase or a distributor. Tire sealant may damage the tire and rim.

TL: Tubeless wheel

- When using an inner tube, do not add additional rim tape on top of the tubeless tape. Doing so may make it difficult to install or remove the tire, and it may cause damage to the inner tube resulting in a sudden puncture, which can cause the bicycle to fall over.
- Be sure to use tubeless tape when using these wheels.
- Do not use tape other than genuine SHIMANO tubeless tape. Otherwise, a sudden puncture may occur, and you may fall off the bicycle.
- If you use a tire such as a Tubeless Ready tire that needs to be used with a sealant, use the sealant recommended by the tire manufacturer.
- Do not overtighten the valve lock ring. If you tighten the valve lock ring too much, the valve seal may become deformed, and air leaks may occur.

■ Bed-in period

- Disc brakes have a bed-in period, and the braking force will gradually increase as the bed-in period progresses. Accidents or falls may occur due to losing control of the bicycle, possibly resulting in serious injury. (The same thing will happen when the pads or rotor are replaced.)

For installation to the bicycle and maintenance

- Refer to the tire size table in the “ Tire size ” section when selecting tires.
- Read the tire manual carefully, and keep it in a safe place for later reference.

- When installing or removing the rotor lock ring, be careful not to touch the outer edges of the rotor with your hands. Wear gloves to protect your hands from getting cut.

NOTICE

Be sure to also inform users of the following:

- For the use of the supplied nipple wrench tool, contact your place of purchase or a distributor for their assistance.
- Special nipple wrenches are available as optional accessories.
- Use only the lubricants specified by SHIMANO.
- Do not oil the internal parts of the hub. Doing so may cause the grease to flow out.
- It is recommended that you ask a place of purchase to adjust the spoke tensions if there is any deviation in the spokes and after the first 1,000 km of riding.
- Optional reflector and spoke protector sets are available. Check the model number on the website specifications and please ask your bicycle dealer for details.
- Do not clean the hub areas with a high-pressure wash. Water may get inside the hubs, which can degrade performance.
- Use a neutral detergent when cleaning wheels. Other cleaners may damage the wheels. Do not clean any areas that have been instructed not to be cleaned.
- Do not forcibly scrub wheel stickers, painted parts, or printed parts. This may peel off the stickers or damage the paint or printing.
- Be sure to also read the manual for the disc brakes.
- Products are not guaranteed against natural wear and deterioration from normal use and aging.
- For maximum performance we highly recommend SHIMANO lubricants and maintenance products.

For installation to the bicycle and maintenance

- Use of genuine SHIMANO spokes, nipples, and washers is strongly recommended. Otherwise, the area where the spokes fit into the hub body may become damaged.
- Be careful not to overtighten the nipples when adjusting the spoke tensions. If overtightened, damage to the rim may result.
- If the wheel becomes stiff and difficult to turn, perform an inspection.
- Special nipple wrenches are available as optional accessories.
- Check the specifications table (https://si.shimano.com) for compatible reflectors and spoke protectors.
- For information on how to install and remove the tires, refer to the manual accompanying the tire.
- If the cassette gets caught in the spline of the freewheel body unit and cannot be removed by hand, replace the freewheel body unit.

The actual product may differ from the illustration because this manual is intended mainly to explain the procedures for using the product.

List of tools to be used

The following tools are needed for installation/removal, adjustment, and maintenance purposes.

Tool	
TL-FC36	TL-FC36
TL-FH12	TL-FH12
TL-FH17A	TL-FH17A
TL-HB16	TL-HB16
TL-HB017	TL-HB017
TL-WHR92	TL-WHR92
	Snap ring pliers (recommended diameter: 0.9 - 1.1 mm)
	Bearing press tool
	Slotted screwdriver
	Soft face mallet

Installation/removal

Tire size

The recommended tire sizes for installation to each wheel are as follows.

Series	Wheel size	Model name	Tire size
XTR	622 x 29.6TC	WH-M9200-TL-F15-B-29	29 x 2.2 - 2.6
		WH-M9200-TL-R12-B-29	
	622 x 30TSS	WH-M9220-TL-F15-B-29	29 x 2.3 - 2.6
		WH-M9220-TL-R12-B-29	
DEORE XT	622 x 30TC	WH-M8200-TL-F15-B-29	29 x 2.3 - 2.6
		WH-M8200-TL-R12-B-29	
	584 x 30TC	WH-M8200-TL-F15-B-275	27.5 x 2.3 - 2.6
		WH-M8200-TL-R12-B-275	

Installing the spoke protector

For information on wheels that can be installed, check the compatibility information (https://productinfo.shimano.com) .

CP-WM92A

1. **Install the pins to the spoke protector.**

NOTICE

- There is a datum hole between the SHIMANO logo and the model name.

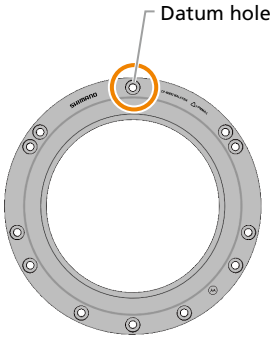

- For the pin installation position, refer to the following.

WH-M9200

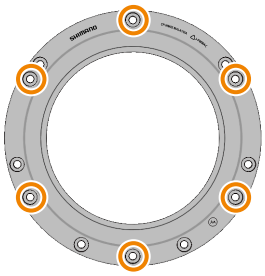

WH-M9220 / WH-M8200

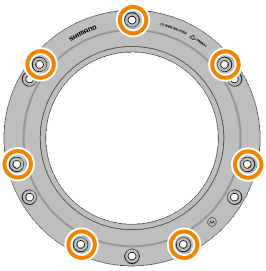

2. **Install the spoke protector.**

   Push the pins onto the outer spokes to install.

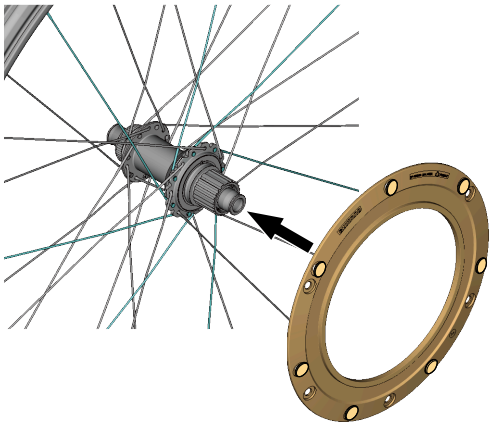

Installing/removing the cassette

Refer to Installing the cassette to install/remove the cassette.

NOTICE

- When using a lock ring tightening tool from another company, ensure that the tool does not interfere with the dust cover of the right cap. Damage to the dust cover or deviation from the specified position may affect the rotation performance and waterproofing performance.

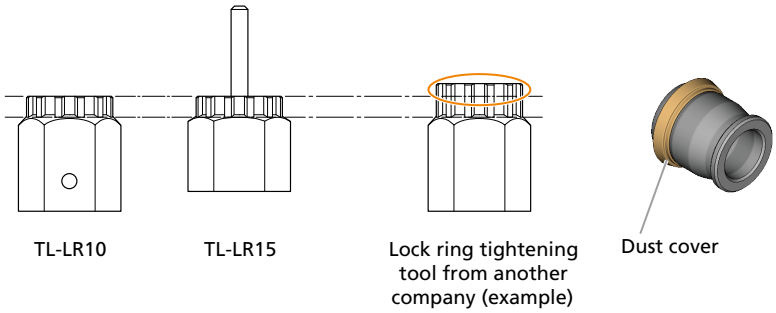

Installing the rotor

1. **Set the rotor on to the hub, then secure it with the rotor lock ring.**

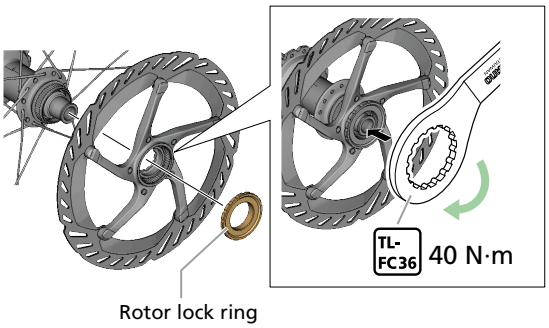

	External spline type
Rotor lock ring	
Lock ring tightening tool	TL-FC36

Removing the rotor

Perform the removal of the rotor in the reverse order from the installation procedure.

Maintenance

Spoke lacing

NOTICE

- Use SHIMANO original tools (for the front: TL-HB16, for the rear: TL-FH12) when assembling the wheel.

WH-M9200

Lace the spokes as shown in the figure.

* Refer to the table for spoke tension value.

Number of spokes: 24

For front

Left side (disc brake rotor side)

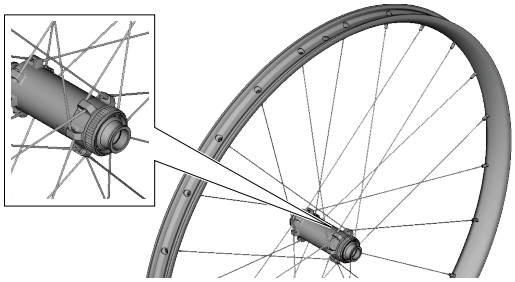

Right side

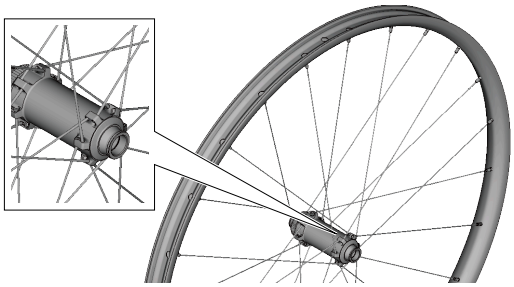

For rear

Left side (disc brake rotor side)

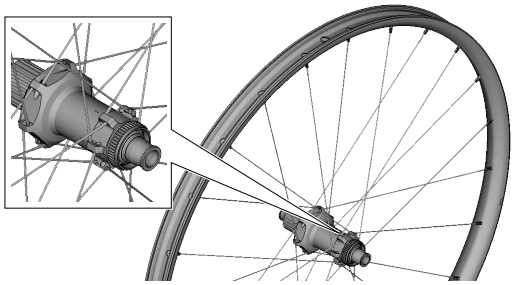

Right side (sprocket side)

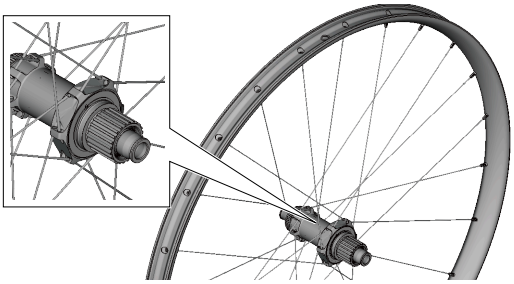

622 x 29.6TC

Spoke tension value		
	For front	For rear
Left side (rotor side)	900 - 1,200 N	720 - 960 N
Right side	880 - 1,180 N	900 - 1,200 N

WH-M9220

Lace the spokes as shown in the figure.

* Refer to the table for spoke tension value.

Number of spokes: 28

Assemble the wheel with 3x spoke lacing. Radial lacing is not supported.

For front

Left side (disc brake rotor side)

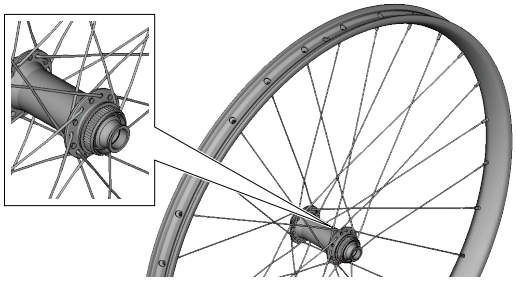

Right side

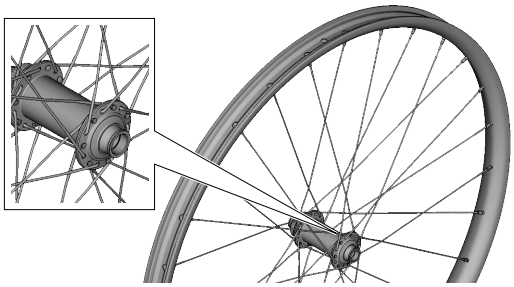

For rear

Left side (disc brake rotor side)

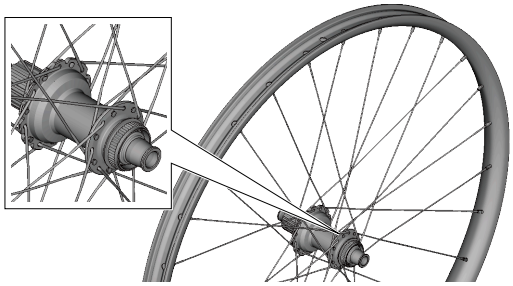

Right side (sprocket side)

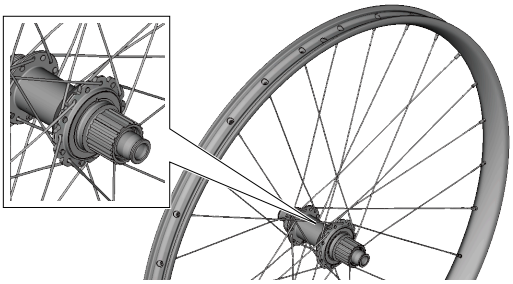

622 x 30TSS

Spoke tension value		
	For front	For rear
Left side (rotor side)	900 - 1,200 N	800 - 1,060 N
Right side	880 - 1,180 N	900 - 1,200 N

WH-M8200

Lace the spokes as shown in the figure.

* Refer to the table for spoke tension value.

Number of spokes: 28

Assemble the wheel with 3x spoke lacing. Radial lacing is not supported.

For front

Left side (disc brake rotor side)

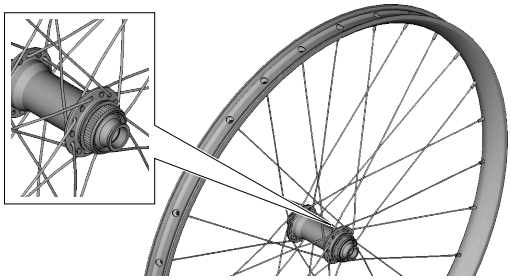

Right side

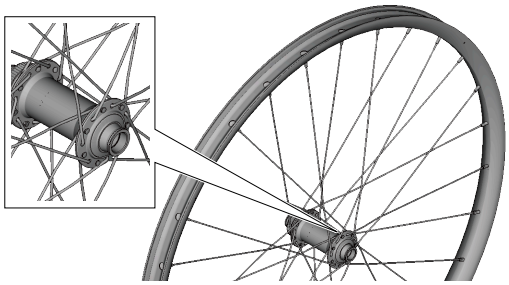

For rear

Left side (disc brake rotor side)

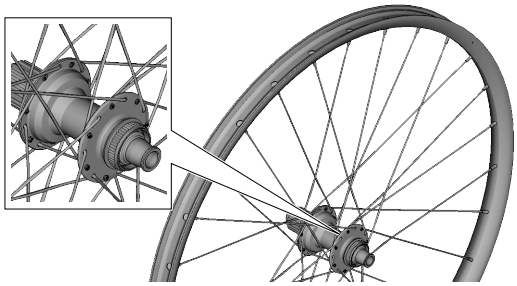

Right side (sprocket side)

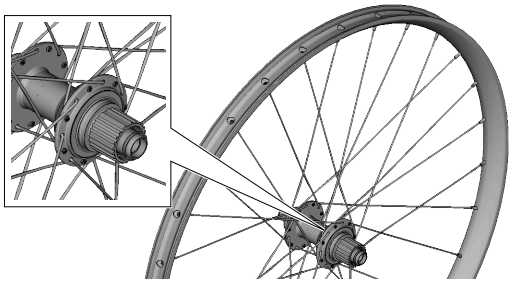

622 x 30TC / 584 x 30TC

Spoke tension value		
	For front	For rear
Left side (rotor side)	900 - 1,200 N	800 - 1,060 N
Right side	880 - 1,180 N	900 - 1,200 N

Replacing the spokes

Remove the tubeless tape before replacing the spokes.

(For instructions on affixing/removing tubeless tape, refer to “ Replacing tubeless tape ”.)

WH-M9200

1. **Remove the spoke to replace.**
2. **Insert the spoke through the hole in the hub flange.**

   Set the spoke onto the hub flange.

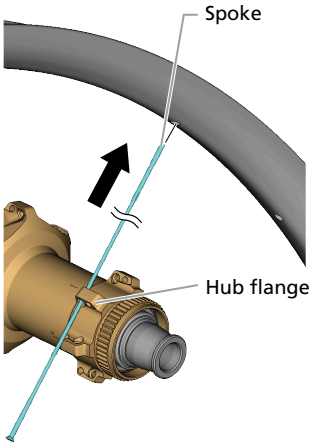

3. **Attach the nipple and tighten the spoke to the specified tension.**

   Secure the flat part of the spoke with the SHIMANO original tool to stop the spoke from turning.

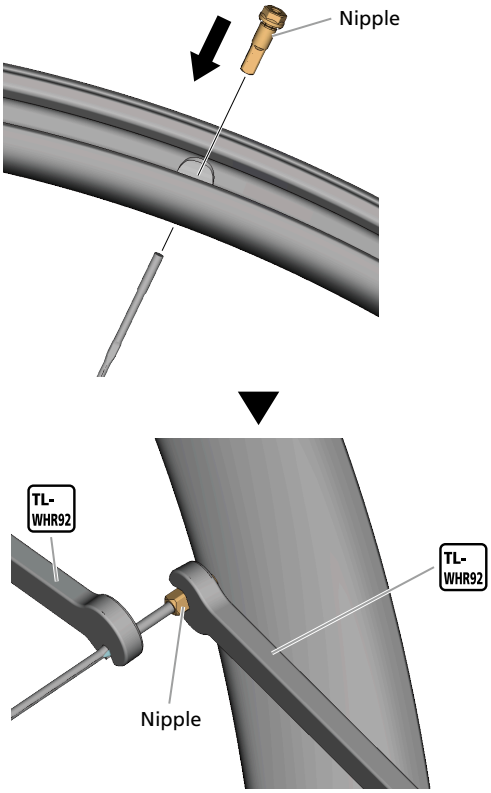

WH-M9220

1. **Remove the spoke to replace.**
2. **Insert the spoke through the hole in the hub flange.**

   Set the spoke onto the hub flange.

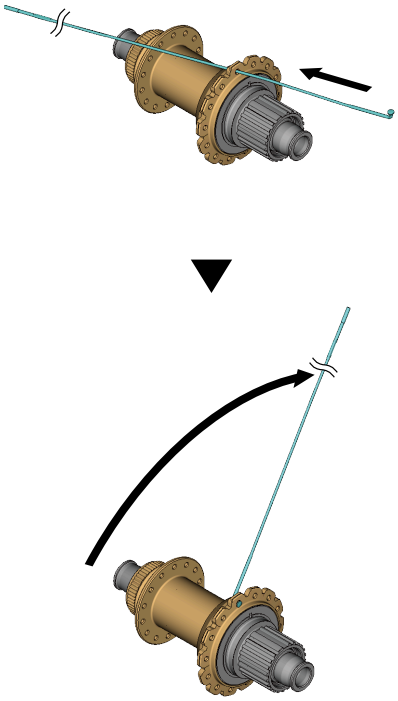

3. **Attach the nipple and tighten the spoke to the specified tension.**

   Secure the flat part of the spoke with the SHIMANO original tool to stop the spoke from turning.

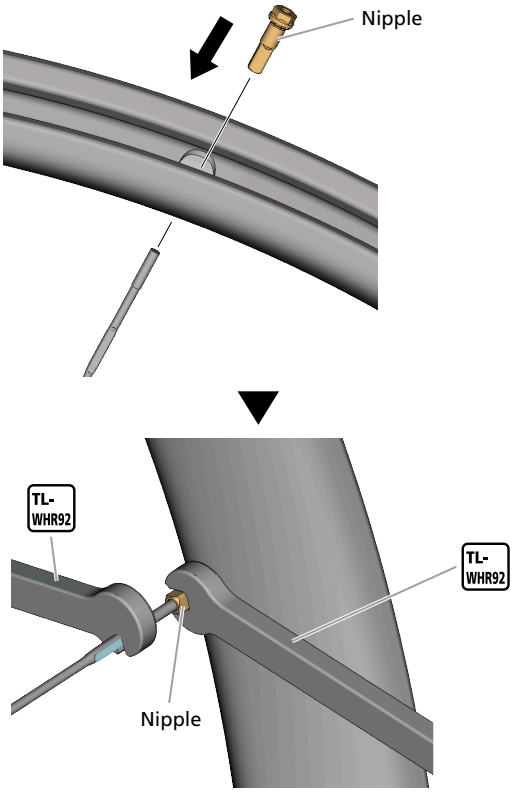

WH-M8200

1. **Remove the spoke to replace.**
2. **Insert the spoke through the hole in the hub flange.**

   Set the spoke onto the hub flange.

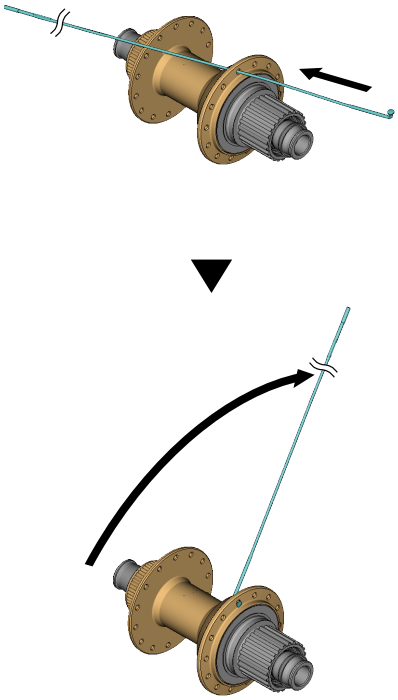

3. **Attach the nipple and tighten the spoke to the specified tension.**

   Secure the flat part of the spoke with the SHIMANO original tool to stop the spoke from turning.

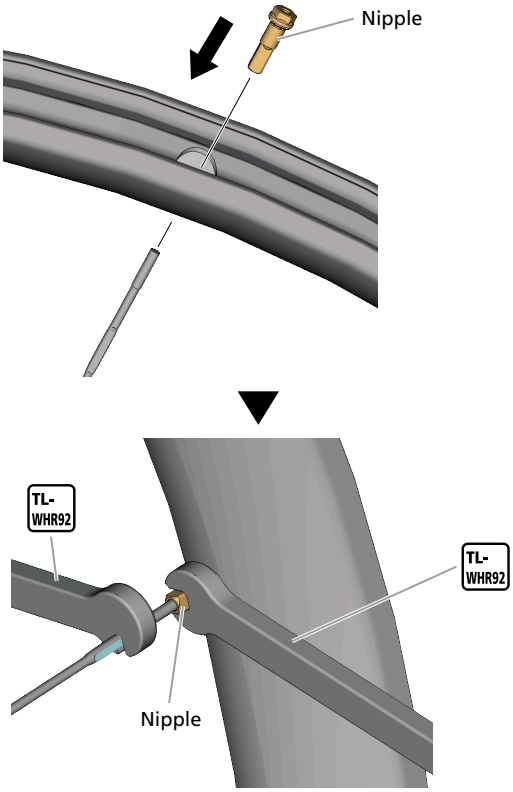

Replacing tubeless tape

Important safety information

⚠ CAUTION

- Be sure to use tubeless tape when using these wheels.
- Do not use tape other than genuine SHIMANO tubeless tape. Otherwise, a sudden puncture may occur, and you may fall off the bicycle.

1. **If sealant was used in the tire, use a clean rag to wipe away any residual sealant from the rim and tape.**

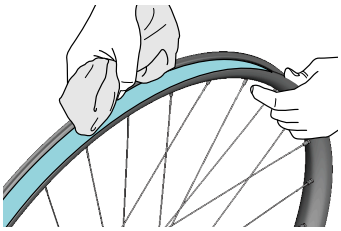

2. **Remove the tubeless tape.**

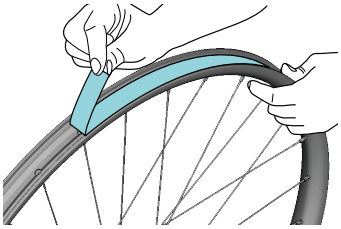

NOTICE

- Tubeless tape cannot be reused. After removing tubeless tape, always replace it with new tape.
- Use a tubeless tape matching the rim inner width.
- Use genuine SHIMANO tubeless tape to prevent punctures and other possible damage.

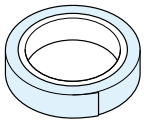

Tubeless tape

3. **Use a clean rag to wipe off any residue, sealant or dirt from the surface where the tubeless tape will be affixed.**

4. **Affix new tubeless tape.**

Start affixing the tubeless tape from the opposite side of the valve.

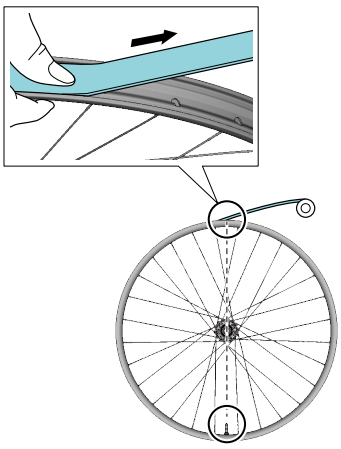

TECH TIPS

- Do not use a tool to affix the tape, as it may cause the tape to tear.
- Pull on the tape to give it some tension when affixing it in order to ensure it sits cleanly in the rim.
- When affixing the tape, align the center of the tape with the center of the rim, not off to one side.

5. Securely attach both ends of the tape to the rim.

* Overlap the ends of the tape by approximately 10 cm.

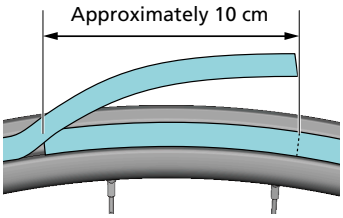

6. Punch a pilot hole in the valve hole section, then attach the valve.

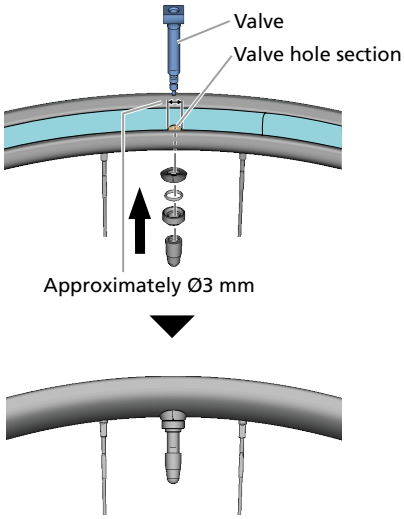

NOTICE

- Note the direction of the valve.

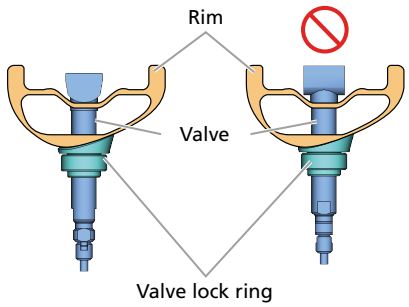

- When tightening the valve lock ring, check that the valve does not turn together with the valve lock ring.

Front hub disassembly

1. **Remove the left and right axle caps by pulling them outwards off the end of the hub.**

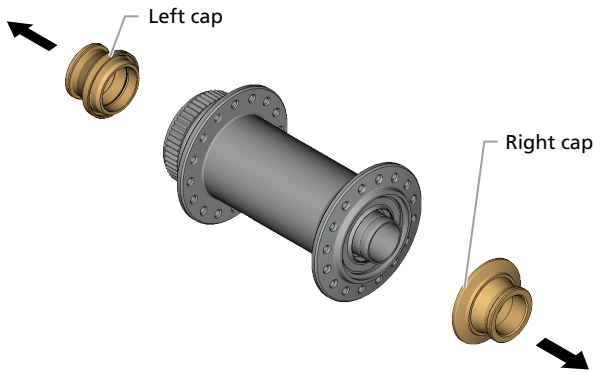

2. **Remove the hub axle, sealed cartridge bearing, and seal ring.**

   (1) Set the SHIMANO original tool onto the hub axle, then knock the SHIMANO original tool with a soft face mallet to remove the hub axle, bearing, and seal ring.

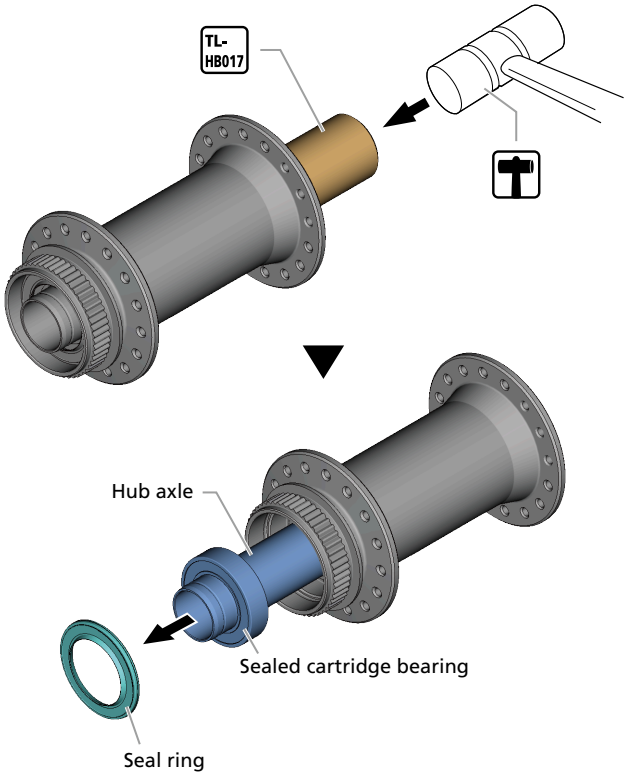

   (2) Use a bench vise to remove the bearing from the hub axle.

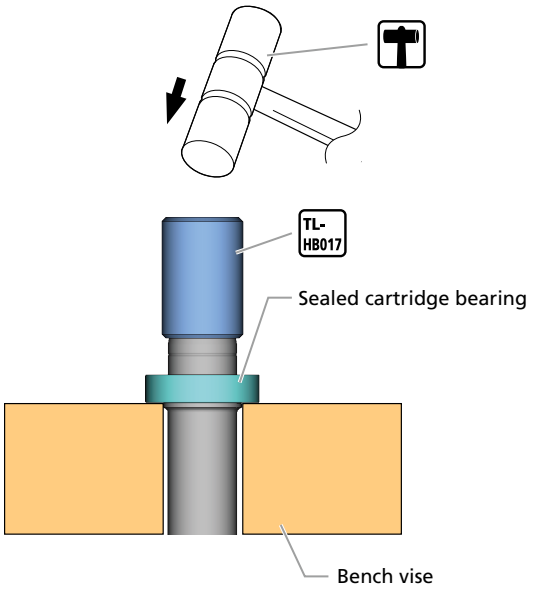

(3) Place a punch (with a recommended diameter of 18 - 25 mm and length of 120 - 150 mm) against the bearing on the opposite side, then strike it with a soft face mallet to remove the bearing and seal ring.

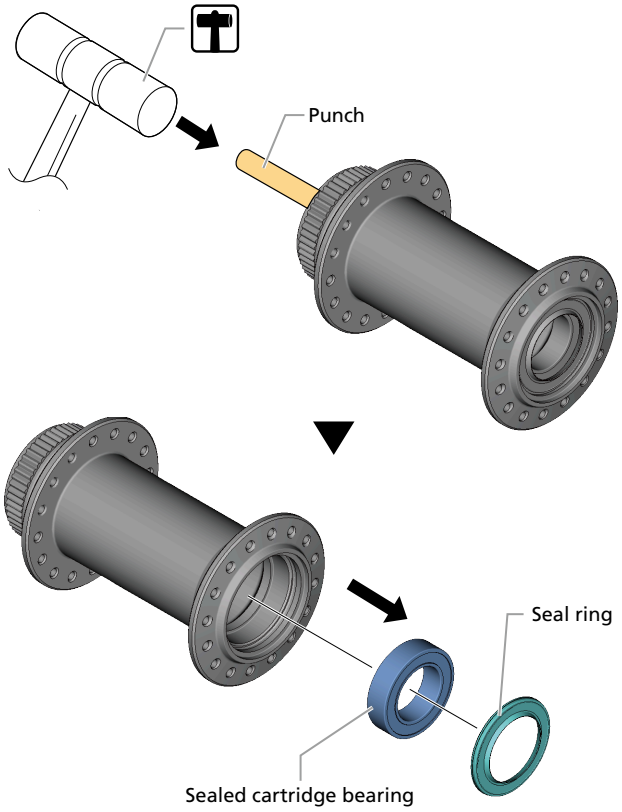

TECH TIPS

- A hub axle with a SHIMANO original tool (TL-HB017 tool for removing the hub bearing) set can be used instead of the punch.

3. The disassembly can be performed as shown in the figure. Apply grease to the indicated parts at periodic intervals.

WH-M9200

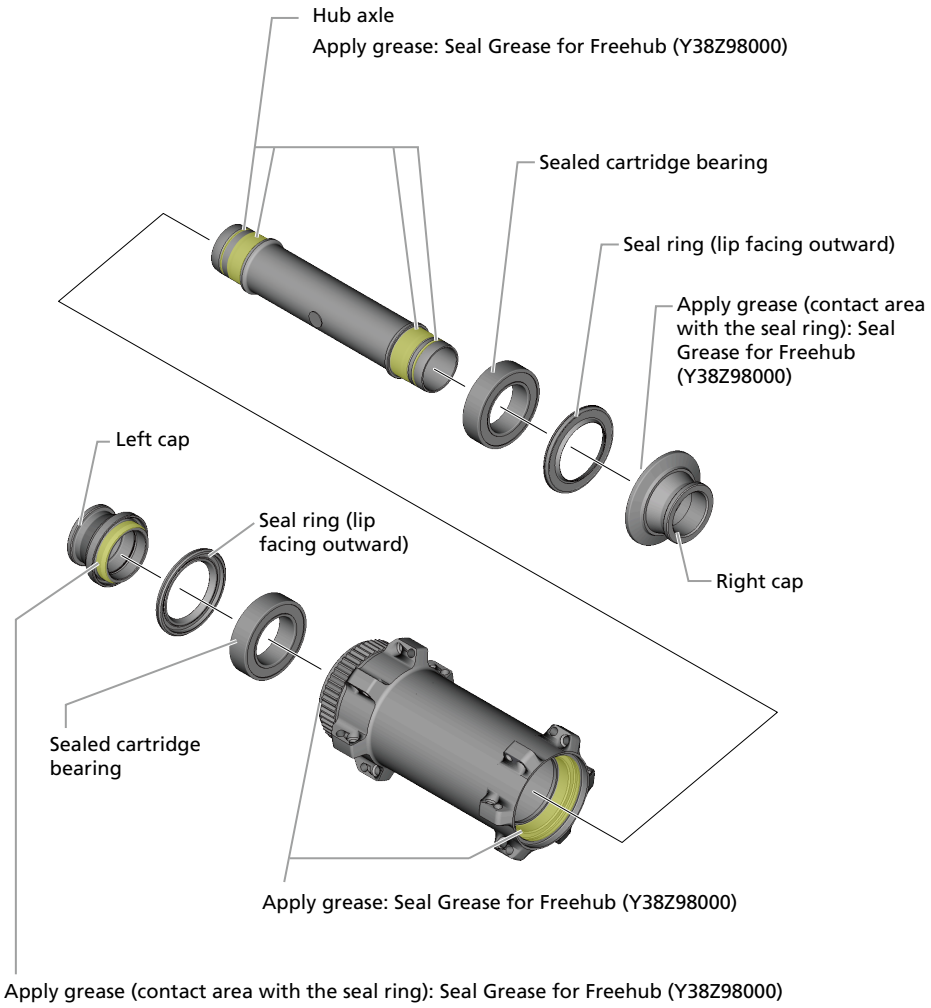

WH-M9220 / WH-M8200

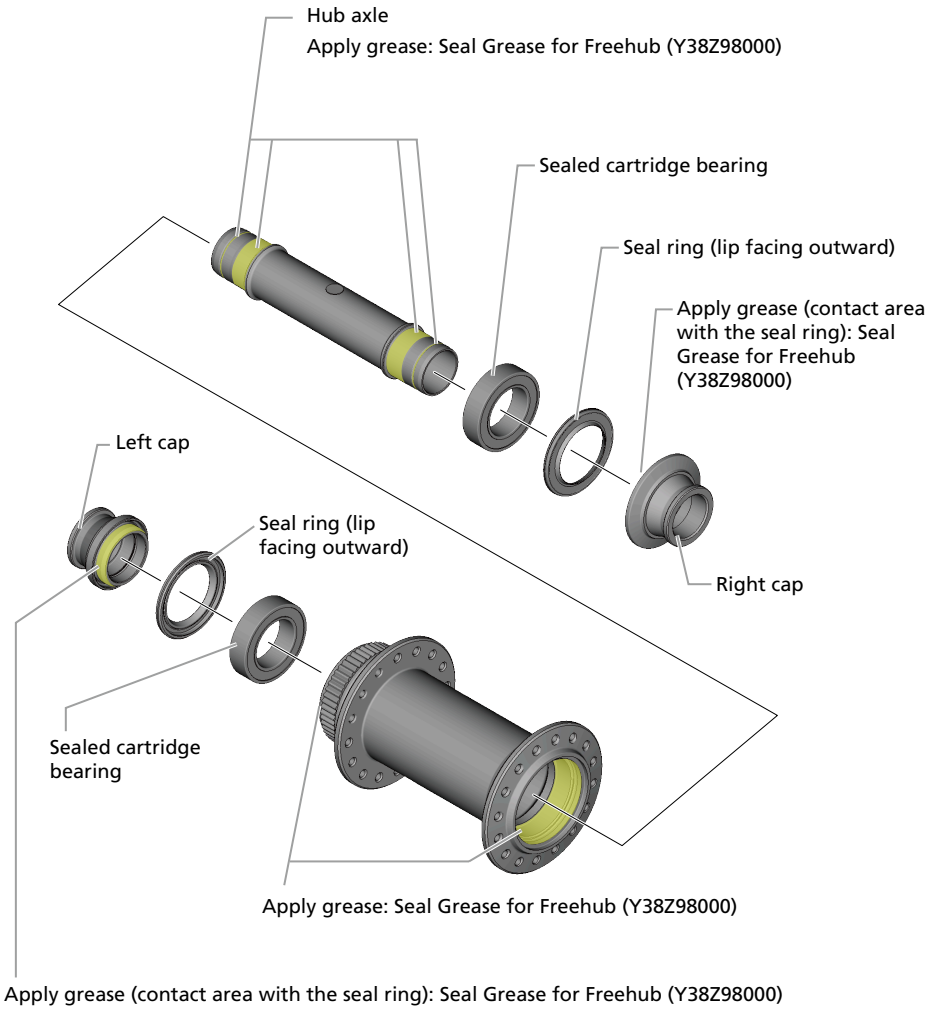

Front hub assembly

1. Apply grease to the hub axle and hub shell.

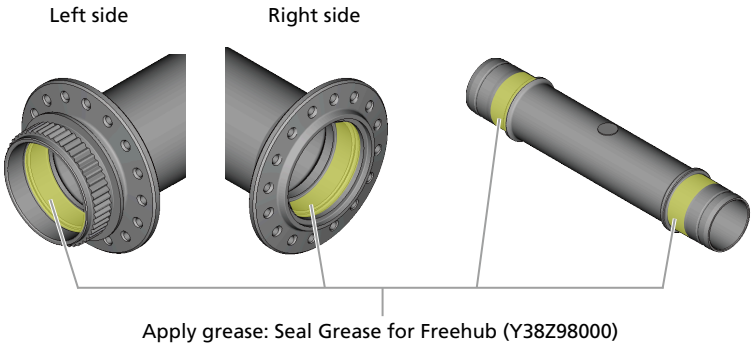

2. Install the sealed cartridge bearing.

(1) Install the bearing and bearing press parts (WH-M9200: inner diameter 17 mm, outer diameter 26 mm, WH-M9220 / WH-M8200: inner diameter 17 mm, outer diameter 30 mm) to the hub body, and set the bearing press tool.

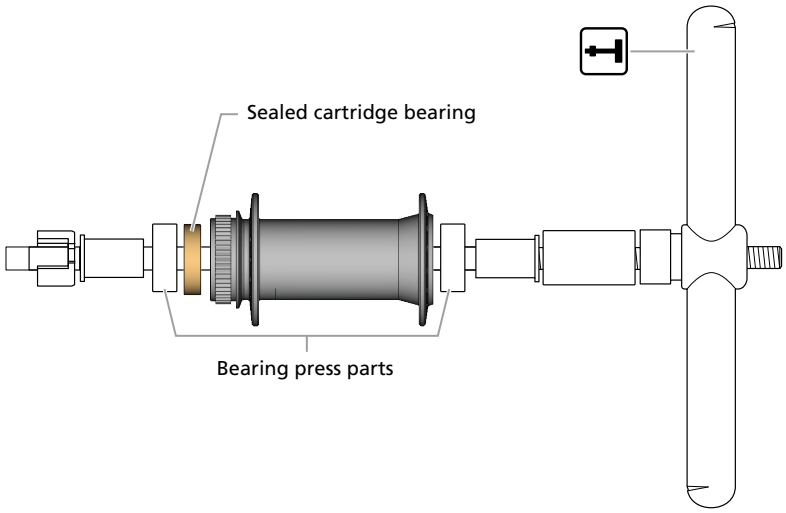

(2) Turn the handle of the bearing press tool, and securely press-fit the bearing as far as it will go.

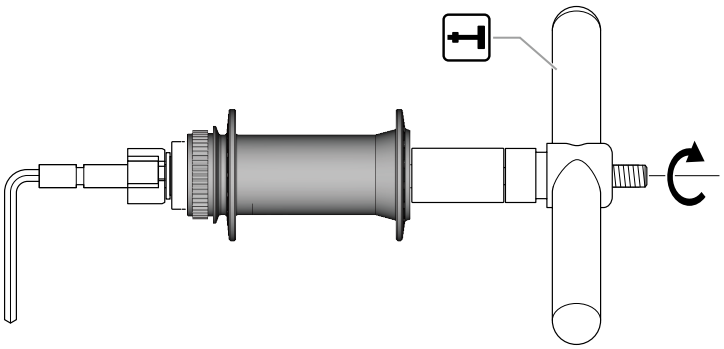

NOTICE

- Make sure to install the bearing on the left side first.

- The bearing press parts should touch both the outer race and inner race of the bearing.
- Press-fit the bearing to the position where the outer race seats securely into the hub body.

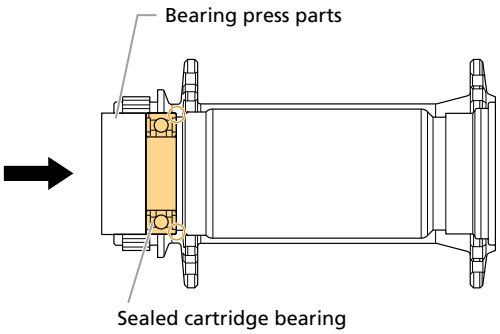

3. Install the bearing and hub axle.

(1) Remove the bearing press tool and bearing press parts, and insert the hub axle from the right side of the hub body.

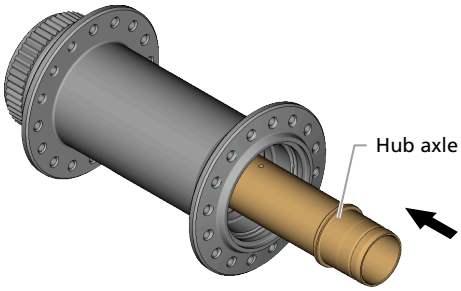

(2) Install the bearing and bearing press parts to the hub body, and set the bearing press tool. Turn the handle of the bearing press tool, and securely press-fit the bearing as far as it will go.

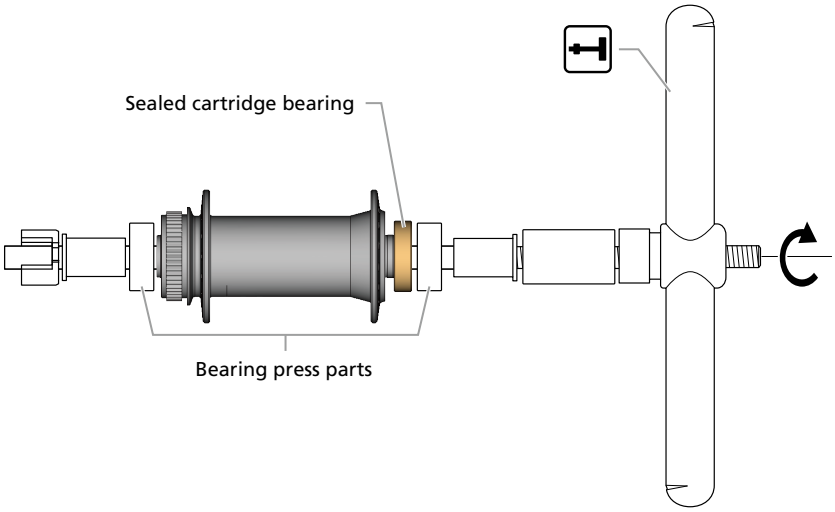

NOTICE

- The bearing press parts should touch both the outer race and inner race of the bearing.

- Press-fit the bearing to the position where the inner race seats securely into the hub axle, and the outer race seats securely into the hub body.

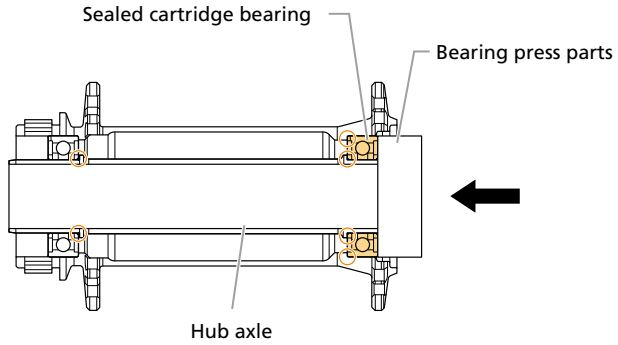

4. Make sure that the bearings are completely installed.

(1) Push the hub axle left and right to confirm there is no excess play in the bearings. If there is excess play, perform step 3 . If there is still excess play, perform step 2 .

(2) Hold the hub body with one hand, and rotate one side of the hub axle with the other hand to confirm that it rotates smoothly. If it is not smooth, gently tap the left side of the hub axle with the SHIMANO original tool (TL-HB017) set to loosen the bearing, as when performing disassembly. When loosening, loosen the right bearing first.

5. Apply grease to the left and right bearings.

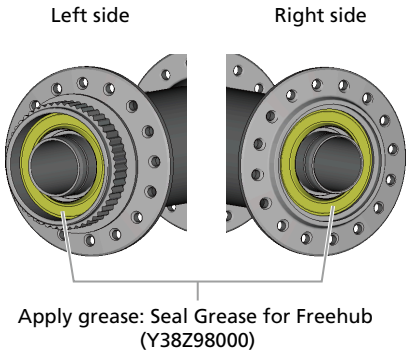

6. Install the left and right seal rings.

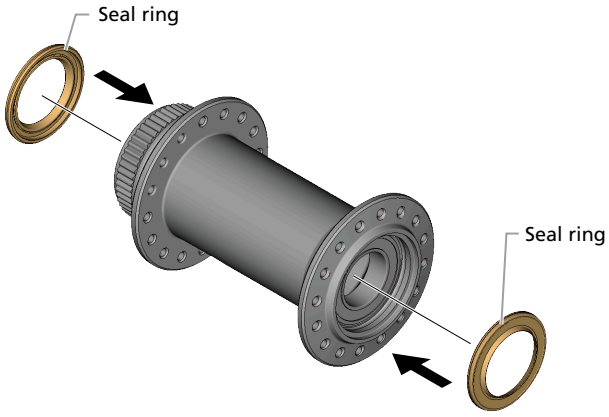

NOTICE

- Install the seal rings very carefully so that they are oriented correctly, parallel to the hub, and not deformed.

7. Apply grease to the left and right caps and the hub axle.

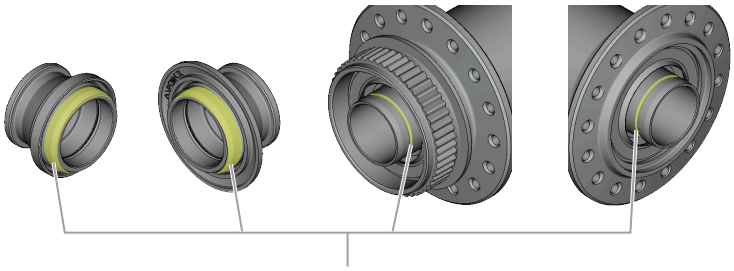

Apply grease: Seal Grease for Freehub (Y38Z98000)

8. Install the left and right caps.

Be sure to push the caps until they click.

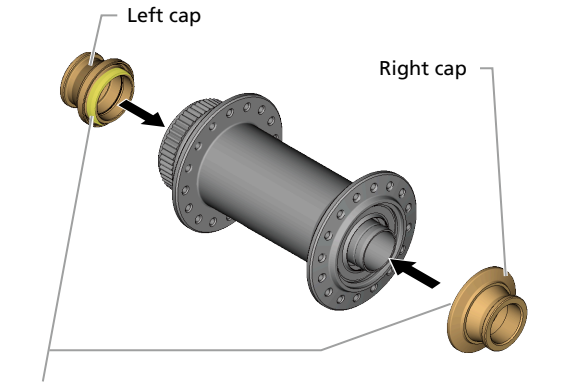

Apply grease (contact area with the seal ring): Seal Grease for Freehub (Y38Z98000)

Pre-work cautions

⚠ WARNING

- Apply the special grease (Seal Grease for Freehub) to the areas illustrated in the figure in step 10 of "Freehub disassembly." Only apply a thin film by hand, and do not mix any other type of grease. If too much grease is used, the wrong grease is used, or grease is applied outside the specified areas, the freewheel body unit may malfunction.
- Do not apply grease or oil to the colored parts in the figure. This may lead to a malfunction in the freewheel body unit.

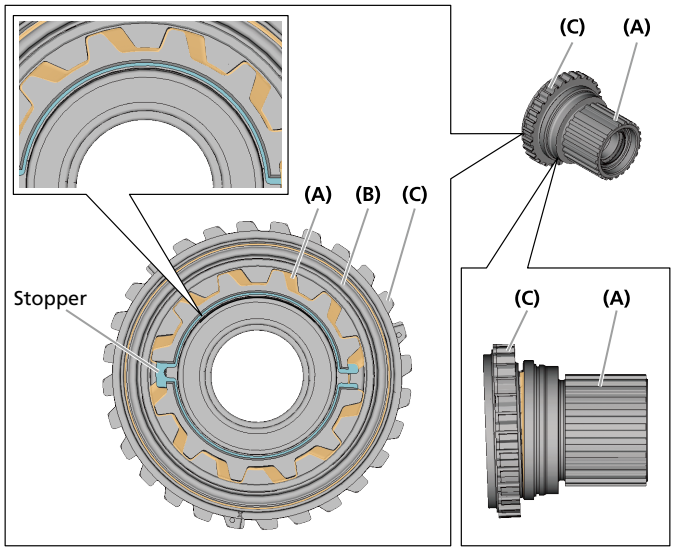

- Do not disassemble the freewheel body unit. The three parts (A), (B) and (C) form one unit (the freewheel body unit). Disassembling them may lead to a malfunction in the freewheel body unit. Do not disassemble the stopper.
- Make sure that the freewheel body unit is operating correctly before riding the bicycle by checking it several times following parts replacement or maintenance. If the freewheel body unit appears to be malfunctioning, replace it.

Freehub disassembly

1. **Remove the outer dust cover and snap ring.**

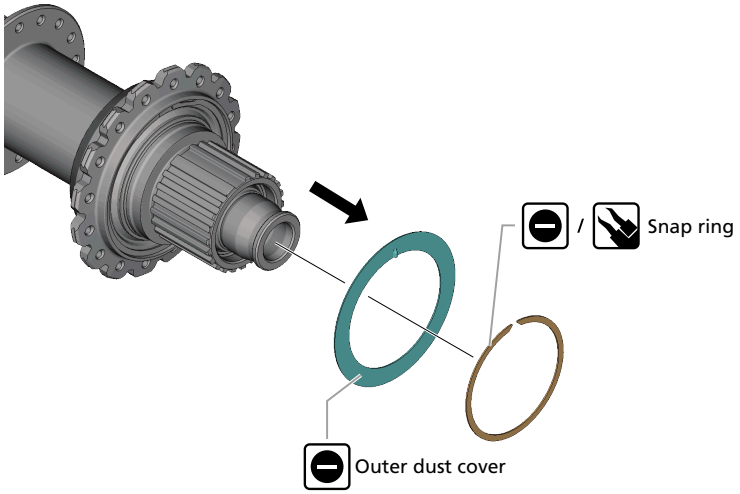

2. **Remove the snap ring.**

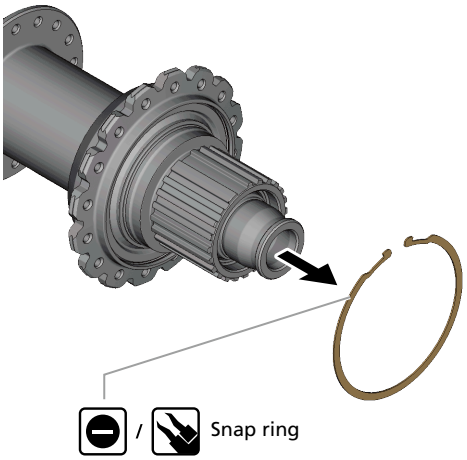

3. **Remove the right cap by pulling it outwards off the end of the hub axle.**

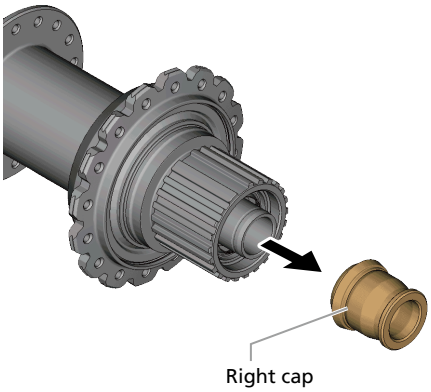

4. **Remove the freewheel body unit and outer seal ring.**

   Also remove the sleeve and coil spring at the same time.

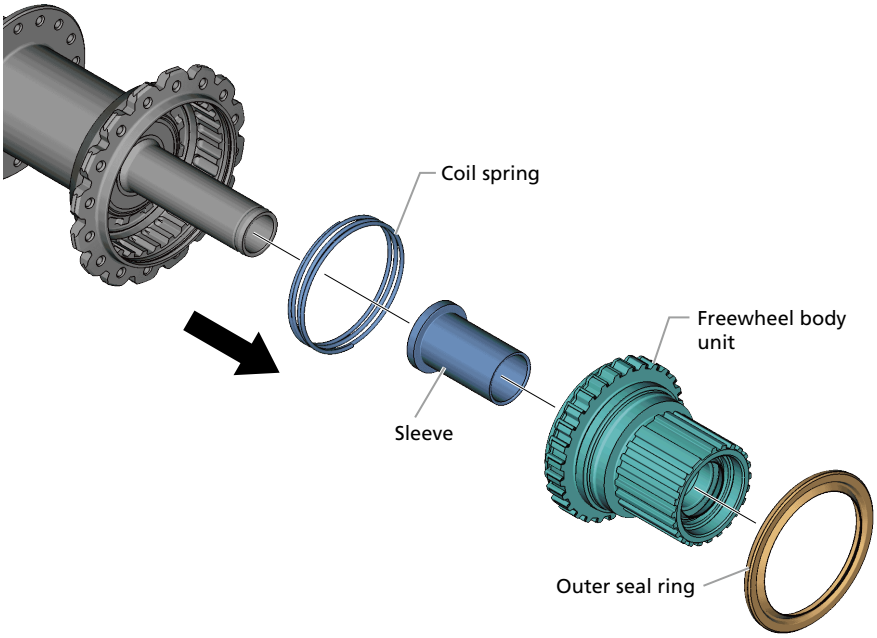

5. Remove the left cap by pulling it outwards off the end of the hub axle.

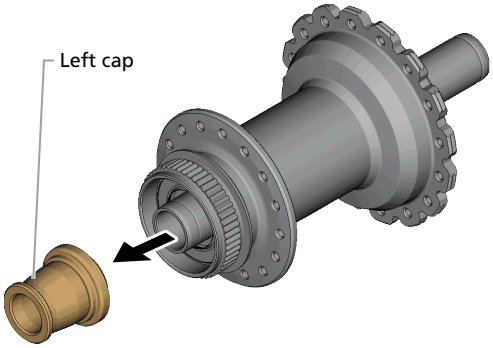

6. Remove the hub axle, sealed cartridge bearing, and seal ring.

(1) Set the SHIMANO original tool onto the hub axle, then knock the SHIMANO original tool with a soft face mallet to remove the hub axle, bearing, and seal ring.

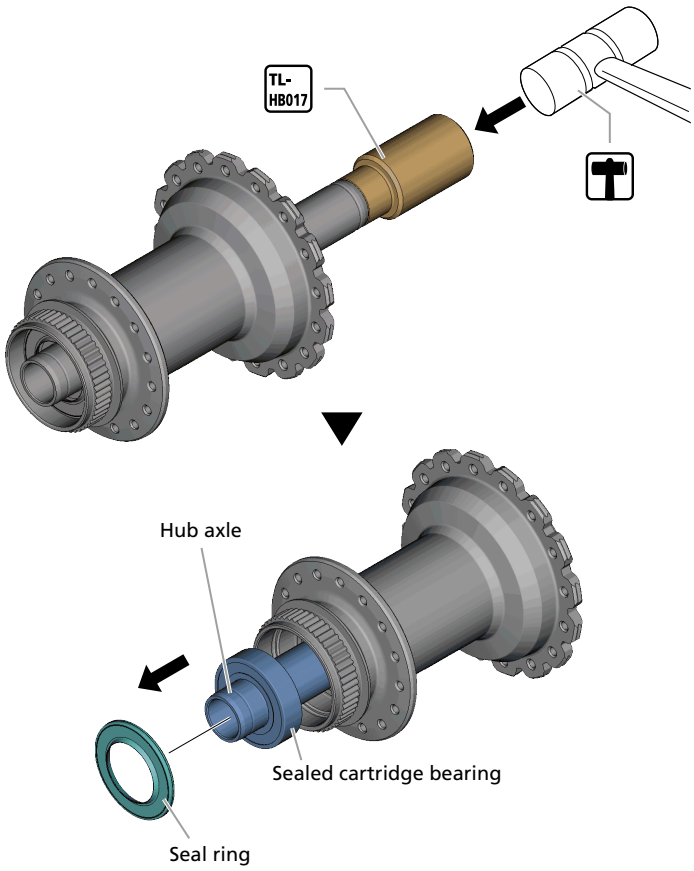

(2) Place a punch (with a recommended diameter of 10 - 15 mm and length of 120 - 150 mm) against the bearing on the opposite side, then strike it with a soft face mallet to remove the bearing.

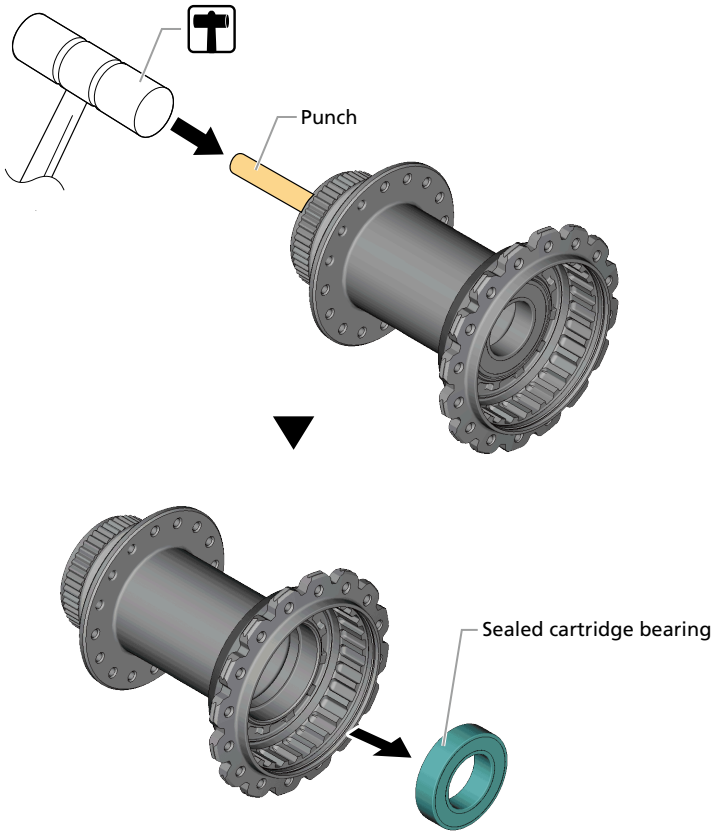

TECH TIPS

- A hub axle with a SHIMANO original tool (TL-HB017 tool for removing the hub bearing) set can be used instead of the punch.

7. Remove the spacer fixing ring, spacer, and slider.

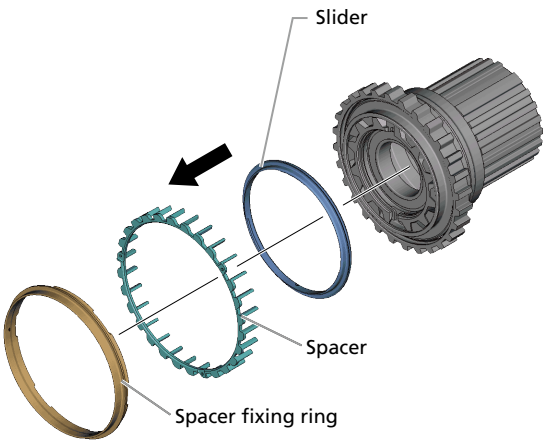

8. Remove the rubber seal and snap ring.

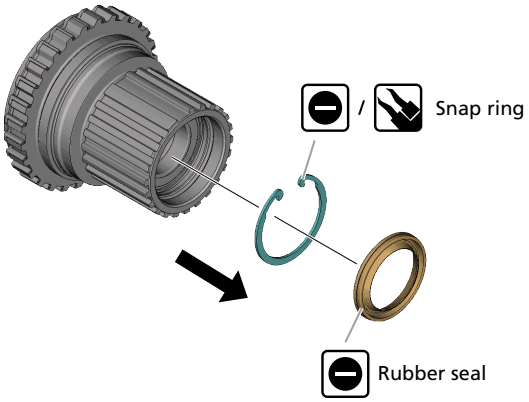

9. Remove the bearing of the freewheel body unit.

(1) Place a punch (with a recommended diameter of 16 - 17 mm and length of 50 mm or longer) against the bearing, then strike it with a soft face mallet to push out the bearing.

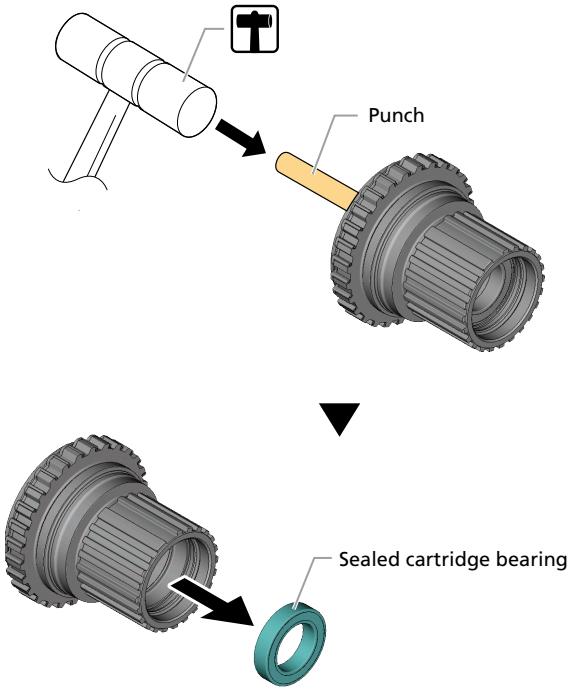

(2) Also push out the bearing on the opposite side in the same manner.

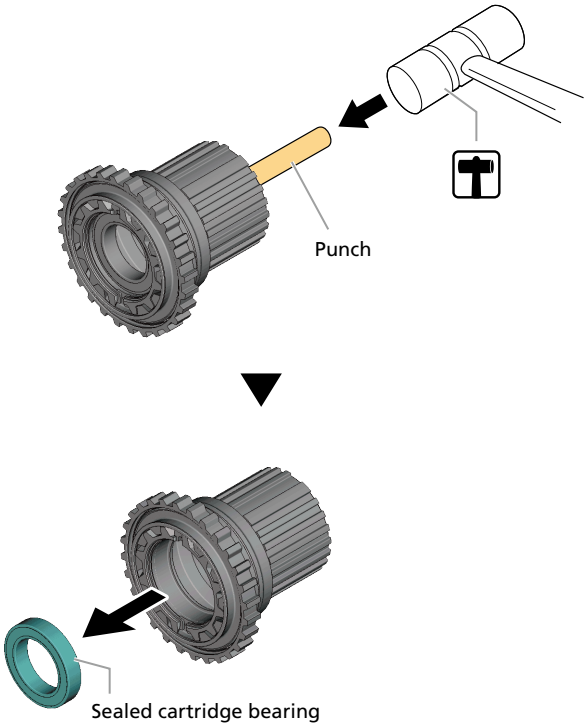

10. The disassembly can be performed as shown in the figure. Apply grease to the indicated parts at periodic intervals.

WH-M9200

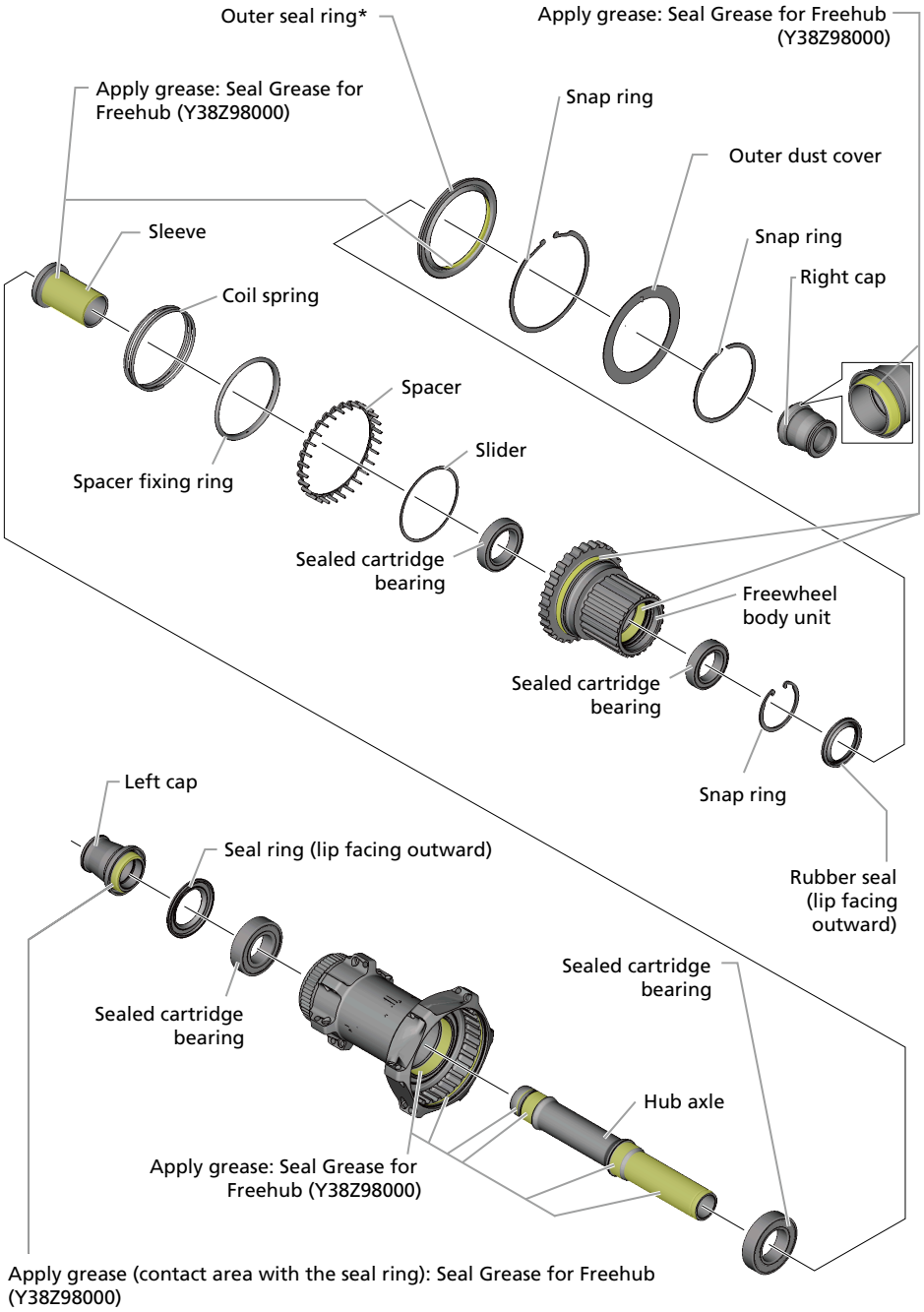
Outer seal ring*
Apply grease: Seal Grease for Freehub (Y38Z98000)
Apply grease: Seal Grease for Freehub (Y38Z98000)
Snap ring
Outer dust cover
Sleeve
Snap ring
Right cap
Coil spring
Spacer
Slider
Spacer fixing ring
Sealed cartridge bearing
Freewheel body unit
Sealed cartridge bearing
Snap ring
Left cap
Seal ring (lip facing outward)
Rubber seal (lip facing outward)
Sealed cartridge bearing
Sealed cartridge bearing
Hub axle
Apply grease: Seal Grease for Freehub (Y38Z98000)
Apply grease (contact area with the seal ring): Seal Grease for Freehub (Y38Z98000)

WH-M9220

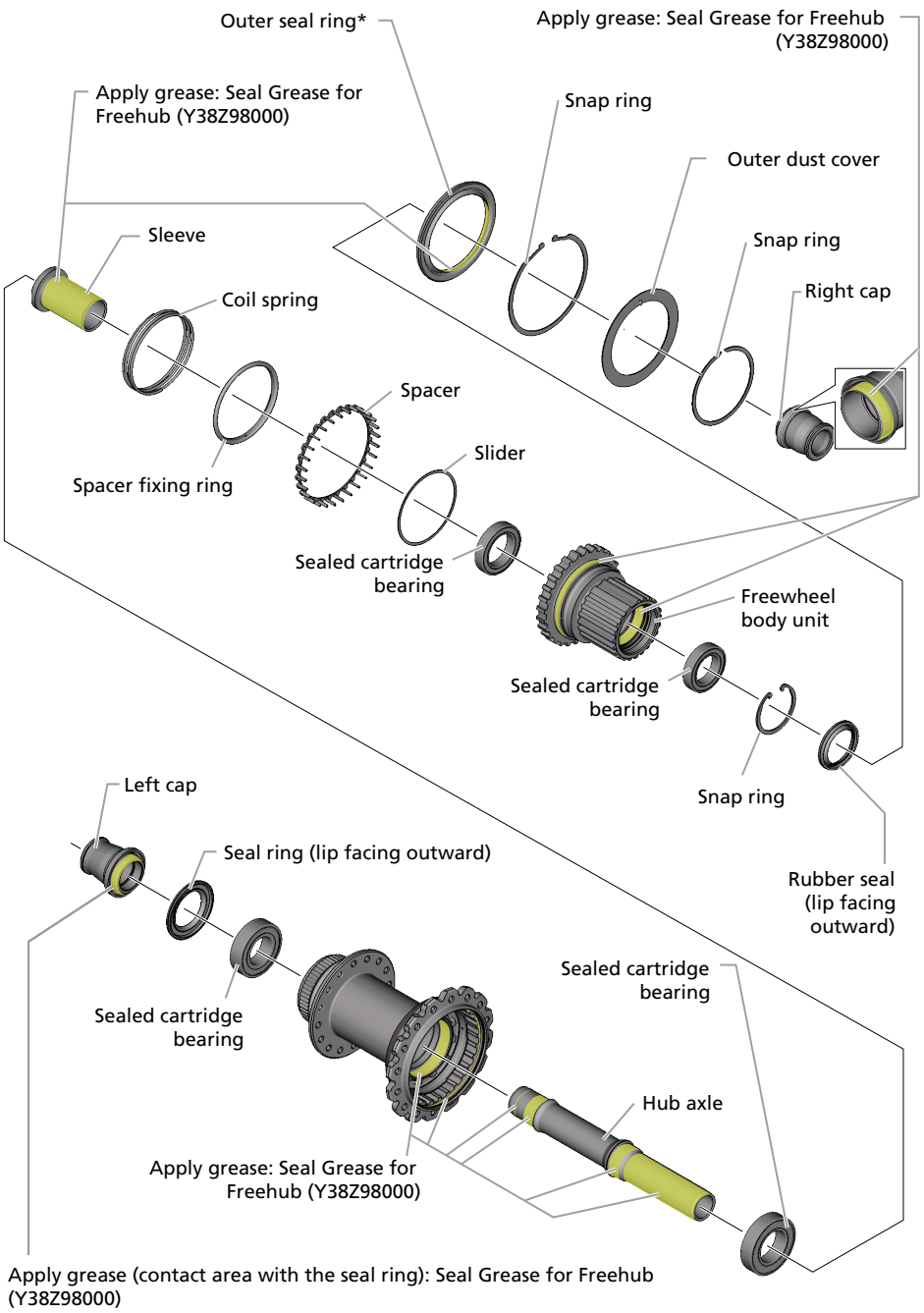
Outer seal ring*
Apply grease: Seal Grease for Freehub (Y38Z98000)
Apply grease: Seal Grease for Freehub (Y38Z98000)
Snap ring
Outer dust cover
Sleeve
Snap ring
Right cap
Coil spring
Spacer
Slider
Spacer fixing ring
Sealed cartridge bearing
Freewheel body unit
Sealed cartridge bearing
Snap ring
Left cap
Seal ring (lip facing outward)
Rubber seal (lip facing outward)
Sealed cartridge bearing
Sealed cartridge bearing
Hub axle
Apply grease: Seal Grease for Freehub (Y38Z98000)
Apply grease (contact area with the seal ring): Seal Grease for Freehub (Y38Z98000)

WH-M8200

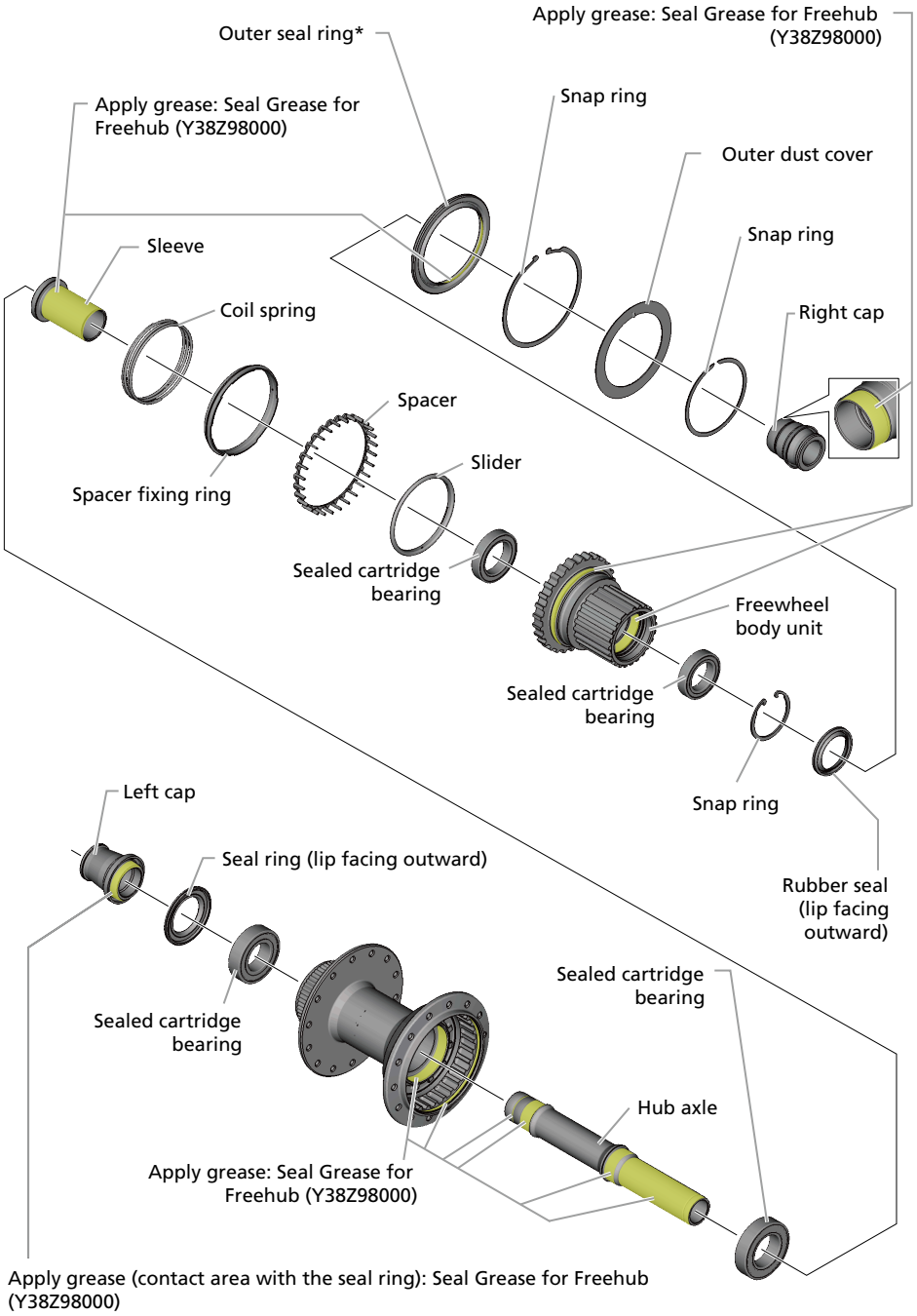

*Check that the outer seal ring orientation is correct when installing it.

NOTICE

- Do not attempt to disassemble the freewheel body unit. If not observed, problems with operation may occur.
- Install/remove the outer seal ring, seal ring and rubber seal very carefully so that they are oriented correctly, parallel to the hub, and not deformed. When reinstalling the outer seal ring, seal ring and rubber seal, check that they are facing the right way and insert them as far as they will go.

- Do not attempt to disassemble the dust cover which is crimped onto the cap.
- Place the freewheel body unit down on a work surface with the hub ratchet facing up. Spin the hub ratchet clockwise while pushing downwards on it, as shown in the figure. Ensure that this firmly engages the hub ratchet, and that the hub ratchet cannot be spun freely.

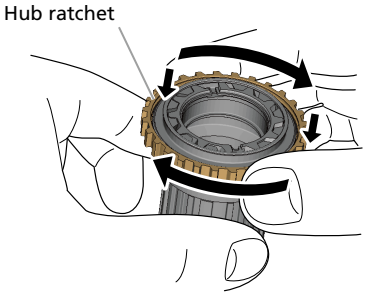

If the two hub ratchets do not engage, reset the position of the ratchets by turning clockwise while pulling up on the hub ratchet, then repeat the previous step. If the ratchets fail to firmly engage after several attempts, it may be indicative of a fault in the freewheel body unit.

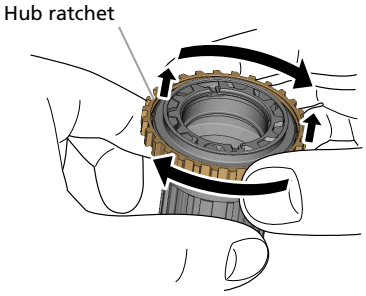

Freehub assembly

1. **Apply grease to the hub body and hub axle.**

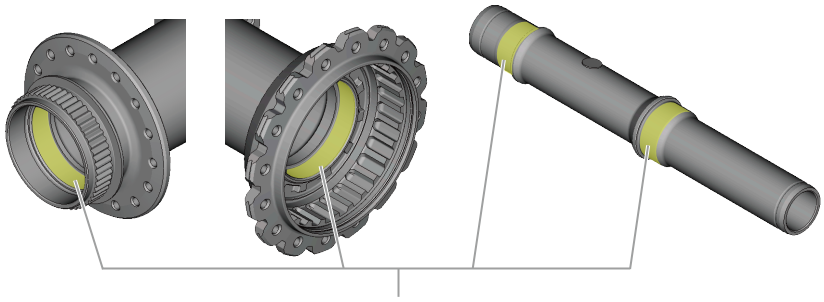

2. **Install the sealed cartridge bearing.**

   (1) Install the bearing and bearing press parts (WH-M9200: inner diameter 15 mm, outer diameter 24 mm, WH-M9220 / WH-M8200: inner diameter 15 mm, outer diameter 28 mm) to the hub body, and set the bearing press tool.

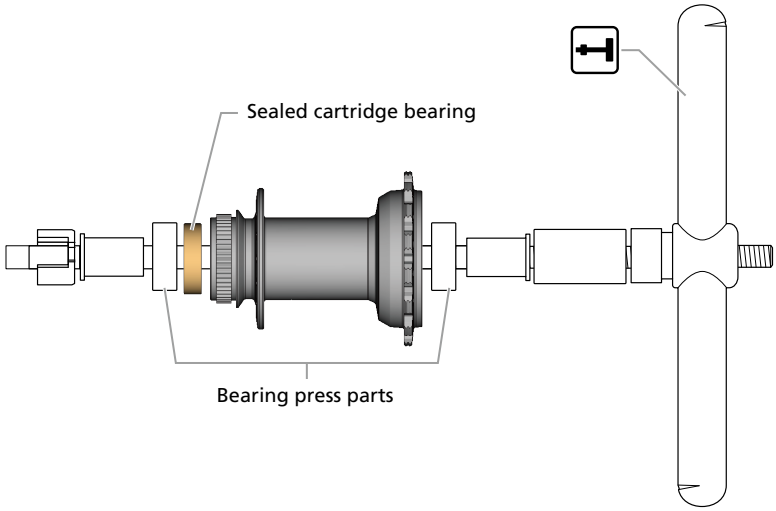

   (2) Turn the handle of the bearing press tool, and securely press-fit the bearing as far as it will go.

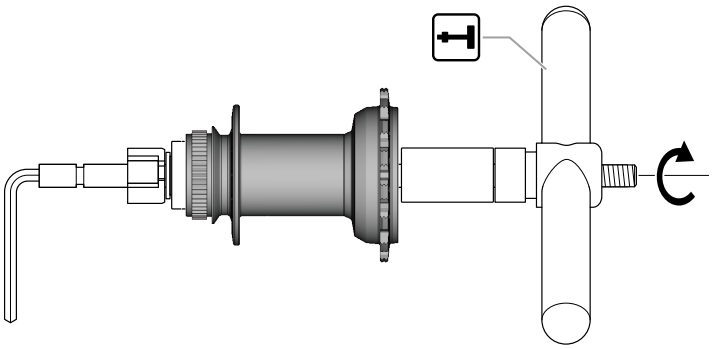

NOTICE

- Make sure to install the bearing on the left side first.

- The bearing press parts should touch both the outer race and inner race of the bearing.
- Press-fit the bearing to the position where the outer race seats securely into the hub body.

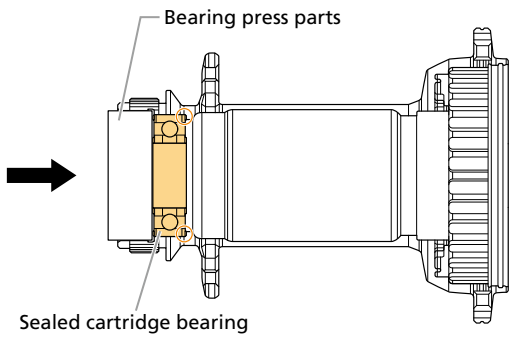

3. Install the hub axle and bearing to the hub body.

(1) Remove the bearing press tool and bearing press parts, and insert the hub axle from the right side of the hub body.

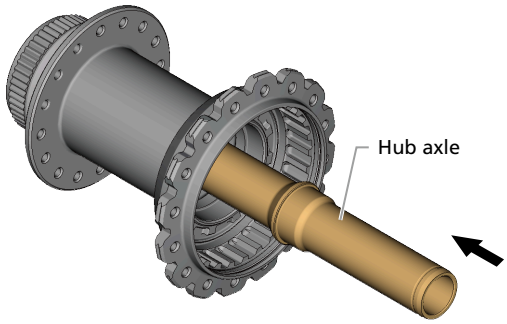

(2) Install the bearing and bearing press parts (inner diameter 17 mm, outer diameter 30 mm) to the hub body, and set the bearing press tool. Turn the handle of the bearing press tool, and securely press-fit the bearing as far as it will go.

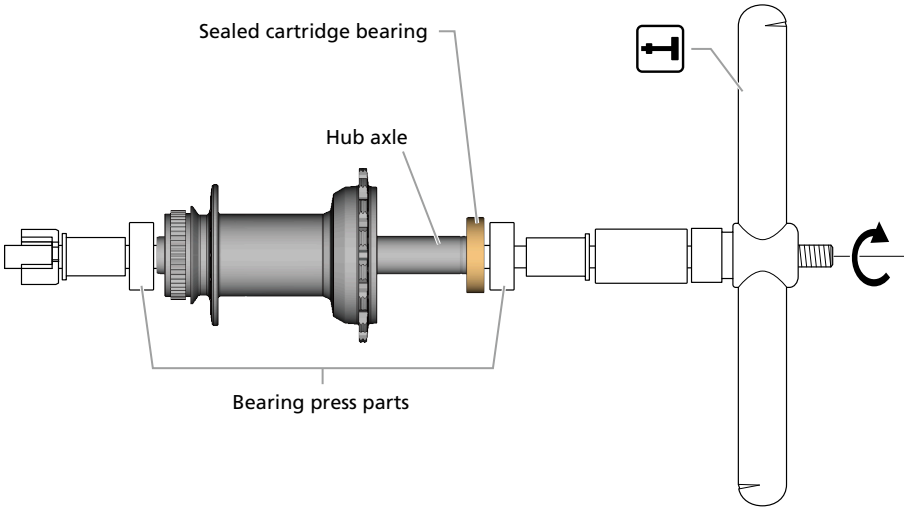

NOTICE

- The bearing press parts should touch both the outer race and inner race of the bearing.

- Press-fit the bearing to the position where the inner race seats securely into the hub axle, and the outer race seats securely into the hub body.

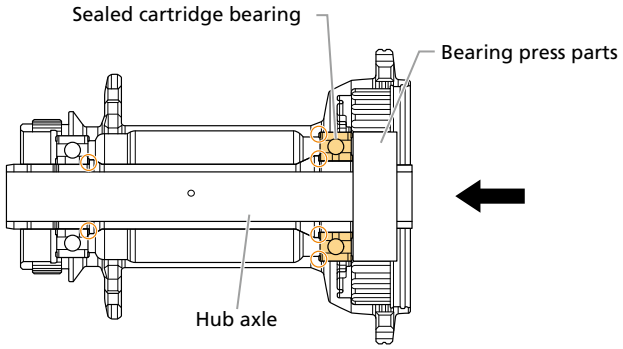

4. Make sure that the bearings are completely installed.

(1) Push the hub axle left and right to confirm there is no excess play in the bearings. If there is excess play, perform step 2. If there is still excess play, perform step 3.

(2) Hold the hub body with one hand, and rotate one side of the hub axle with the other hand to confirm that it rotates smoothly. If it is not smooth, set the SHIMANO original tool (TL-HB017) onto the hub axle, then knock the SHIMANO original tool with a soft face mallet to loosen the bearing. When loosening, loosen the right bearing first.

5. Apply grease to the bearing (seal ring contact area).

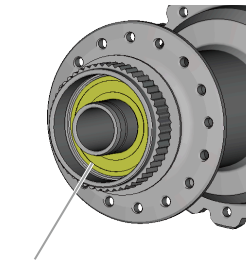

Apply grease: Seal Grease for Freehub (Y38Z98000)

6. Install the seal ring on the left side of the hub body.

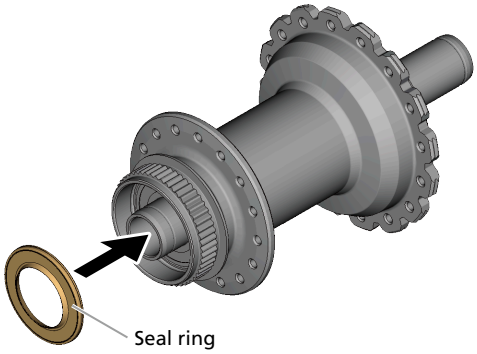

NOTICE

- Make sure to install the seal ring on the left side first.

- Install the seal rings very carefully so that they are oriented correctly, parallel to the hub, and not deformed.

7. Apply grease to the left cap and the hub axle.

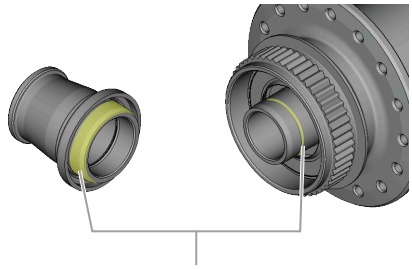

Apply grease: Seal Grease for Freehub (Y38Z98000)

8. Install the left cap to the hub axle.

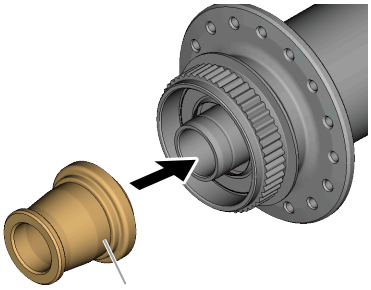

9. Apply grease to the freewheel body unit.

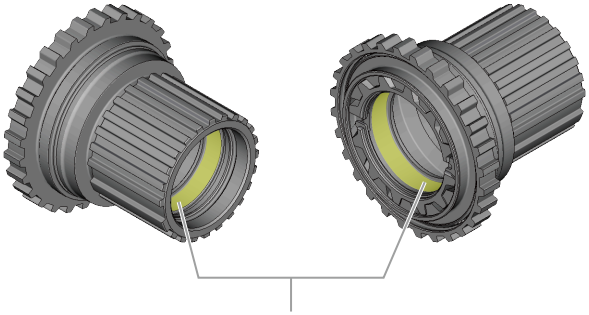

Apply grease: Seal Grease for Freehub (Y38Z98000)

10. Install the bearings.

(1) Install the left and right bearings and bearing press parts (left: inner diameter 17 mm, outer diameter 26 mm; right: inner diameter 15 mm, outer diameter 24 mm) to the freewheel body unit, and set the bearing press tool.

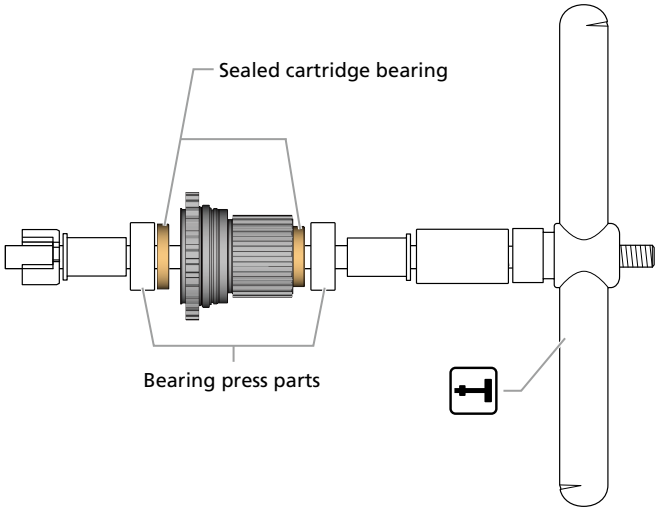

(2) Turn the handle of the bearing press tool, and press-fit the bearings.

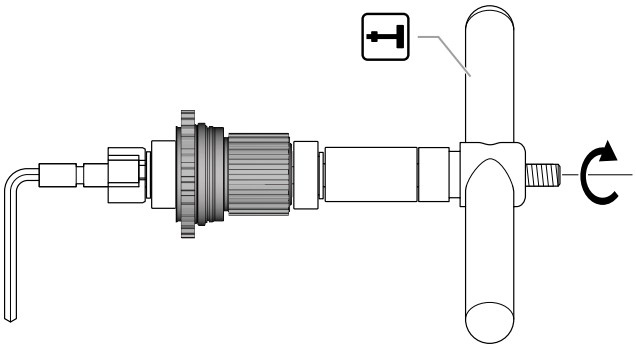

NOTICE

- The bearing press parts should touch both the outer race and inner race of the bearings.

11. Install the snap ring to the freewheel body unit.

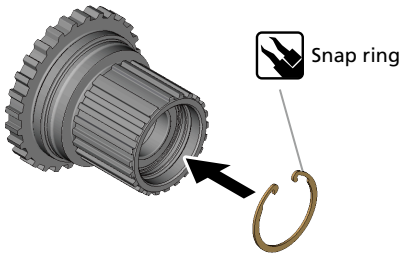

12. Apply grease to the bearings.

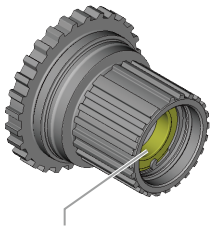

Apply grease: Seal Grease for Freehub (Y38Z98000)

13. Install the rubber seal to the freewheel body unit.

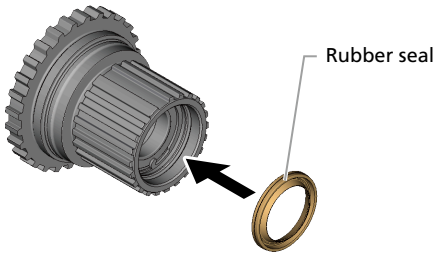

14. Install the slider, spacer, and spacer fixing ring.

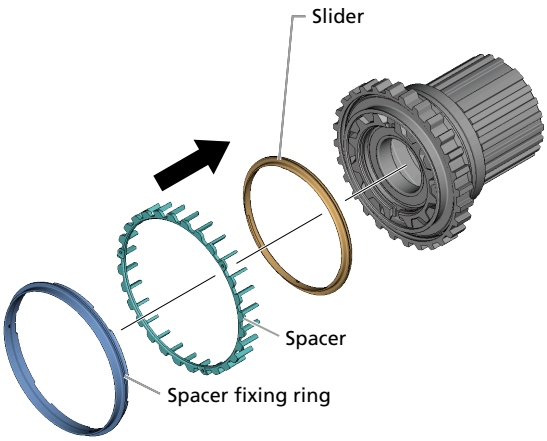

NOTICE

- Pay attention to the orientation of the spacer fixing ring.

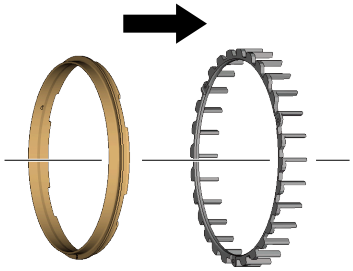

- Pay attention to the position of the spacer.

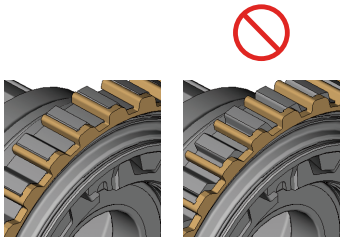

15. Apply grease to the right cap, sleeve, hub axle, and groove in the hub.

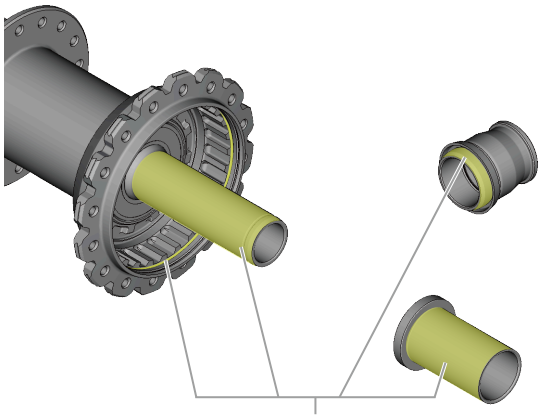

Apply grease: Seal Grease for Freehub
(Y38Z98000)

16. Install the coil spring, sleeve, freewheel body unit, and right cap.

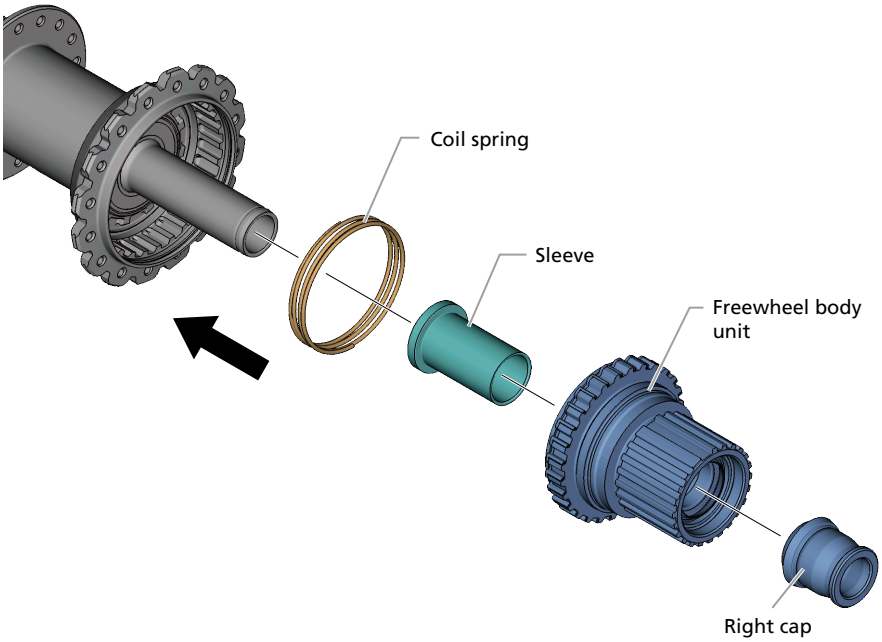

17. Apply grease to the outer seal ring contact area of the freewheel body unit.

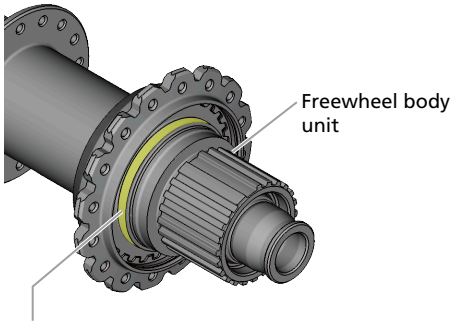

Apply grease: Seal Grease for Freehub
(Y38Z98000)

18. Apply grease to the groove inside the lip of the outer seal ring.

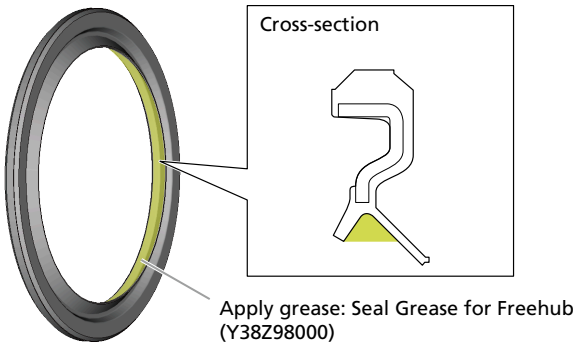

19. Install the outer seal ring.

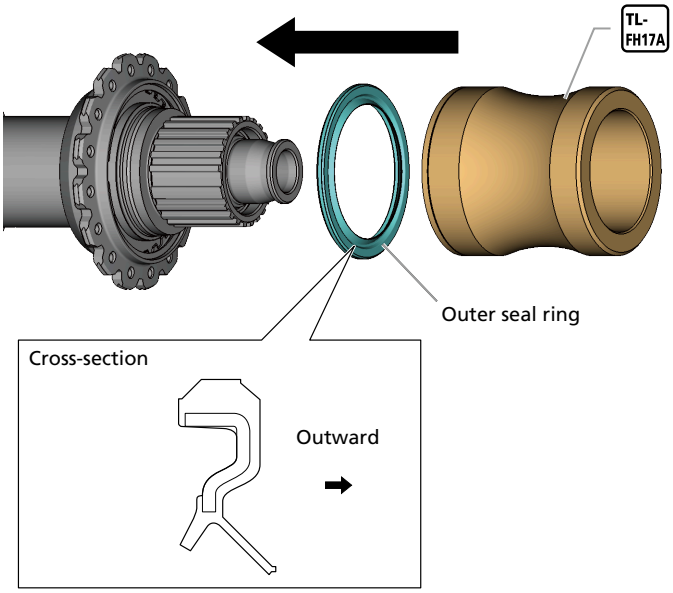

NOTICE

- Install/remove the outer seal ring very carefully so that it is oriented correctly, parallel to the hub, and not deformed. When installing the outer seal ring, check that it is facing the right way.
- Install so that the metallic part of the outer seal ring faces the inner side.

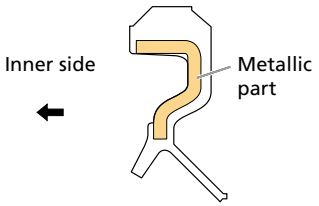

20. Install the snap ring to the hub body. Install the outer dust cover and snap ring to the freewheel body unit.

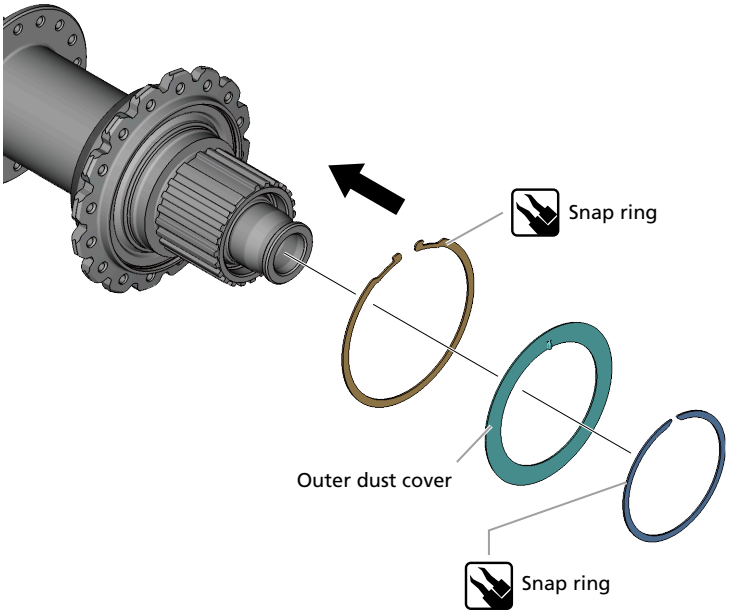
Snap ring
Outer dust cover
Snap ring

Replacing the freewheel body unit

Refer to “ Pre-work cautions ”, “ Freehub disassembly ”, and “ Freehub assembly ” when replacing the freewheel body unit.

The procedure from step 5 in “Freehub disassembly” is unnecessary, since the hub axle does not need to be removed.

NOTICE

- If the cassette gets caught in the spline of the freewheel body unit and cannot be removed by hand, replace the freewheel body unit.

Installing and removing the tubeless tires

Important safety information

⚠ WARNING

- The tires should be installed and removed by hand. If this is difficult, a resin tire lever for tubeless wheels may be used. In such cases, be sure to check that the rim surface has not been dented, scratched, or cracked as there is a risk of causing damage to the air seal between the tire and the rim, which would result in air leakage. For carbon rims, check that there is no carbon peeling or cracking, etc. Finally, make sure that there is no air leakage.

⚠ CAUTION

- When using an inner tube, do not add additional rim tape on top of the tubeless tape. Doing so may make it difficult to install or remove the tire, and it may cause damage to the inner tube resulting in a sudden puncture, which can cause the bicycle to fall over.
- Do not overtighten the valve lock ring. If you tighten the valve lock ring too much, the valve seal may become deformed, and air leaks may occur.

NOTICE

- If the tires are difficult to fit, use tap water or soapy water to help them slide more easily.
- Products are not guaranteed against natural wear and deterioration from normal use and aging.

Installation

1. Install the valve on the rim.

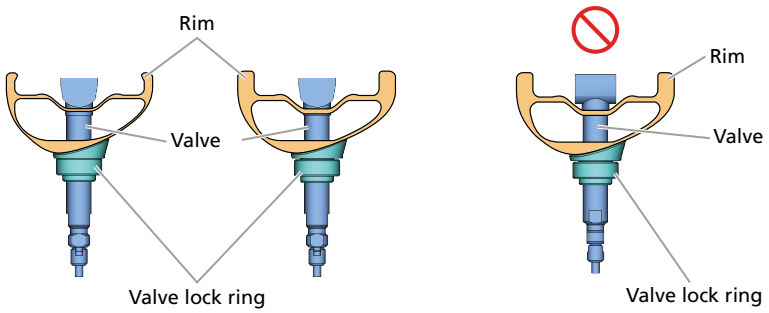

NOTICE

- Note the direction of the valve.
- When tightening the valve lock ring, check that the valve does not turn together with the valve lock ring.

2. **On one side of the tire, push the bead into the center groove of the rim.**

   * Check that there are no foreign particles or damage in the tire bead, rim, and valve.

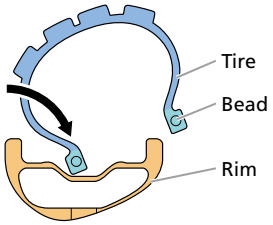

3. **Set the bead on the other side of the tire starting from the point opposite the air valve.**

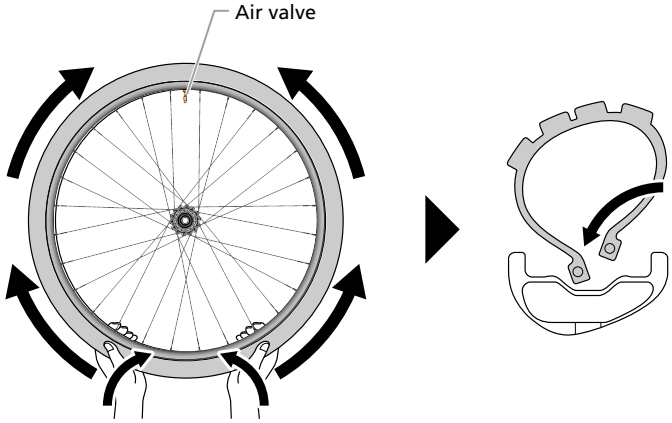

TECH TIPS

- If the final section of the bead at the air valve is difficult to mount, make sure the whole bead is pushed into the center groove of the rim. Start from the opposite side of the air valve and work your way around each side to the location of the air valve.

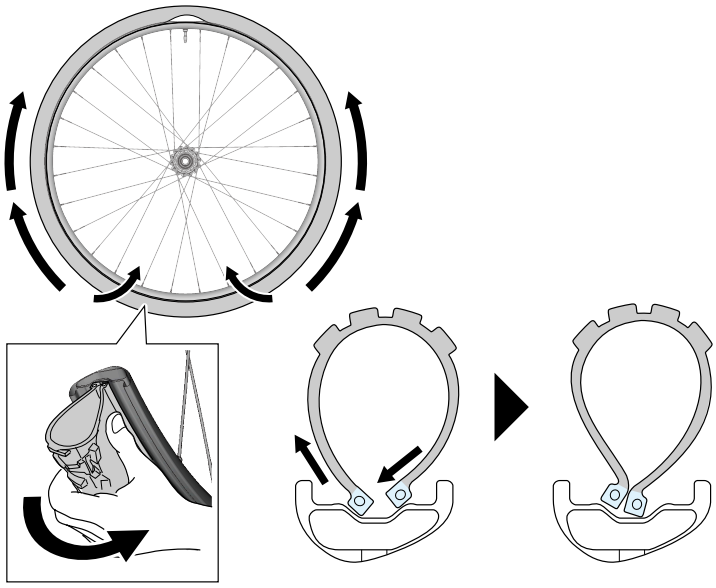

4. **Grip the tire with both hands and insert the tire into the rim.**

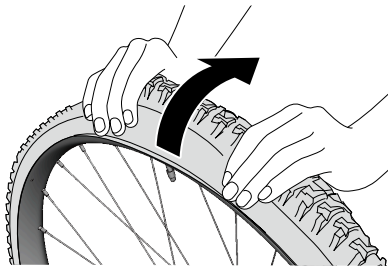

5. **Inflate with air to lock the beads of the tires into the rim.**

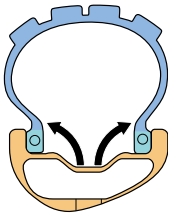

6. **Deflate the tire and check that the beads are locked into the rim.**

   When deflating the tire, the tire may separate from the rim if the bead lock is released from the rim and cause air leaks while riding.

7. **Inflate the tire until it is at an appropriate pressure.**

⚠ WARNING

- Use the appropriate air pressure indicated on the tire and rim. If the maximum pressures indicated on the tires and rims differ, be sure not to exceed the maximum pressure with the lower value. A higher pressure than indicated can cause a sudden puncture and/or sudden release of the tire, which can result in serious injury.

  WH-M9200-TL / WH-M9220-TL / WH-M8200-TL: Maximum pressure = 2.5 bar / 36 psi / 250 kPa

Removal

1. **To remove the tire, deflate it and push one side of the bead into the center groove of the rim.**

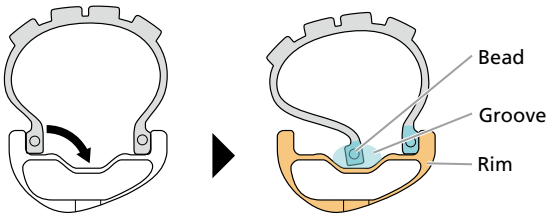

TECH TIPS

- Be sure to only push in the bead on one side of the tire. If you push the beads in on both sides, the tires will be difficult to remove. If you accidentally unseat both beads, inflate the tire once more to lock the beads, then restart the procedure from the beginning.

2. **Remove the beads.**

   * Remove the bead on one side of the tire starting from the point closest to the air valve, then remove the

bead on the other side of the tire.

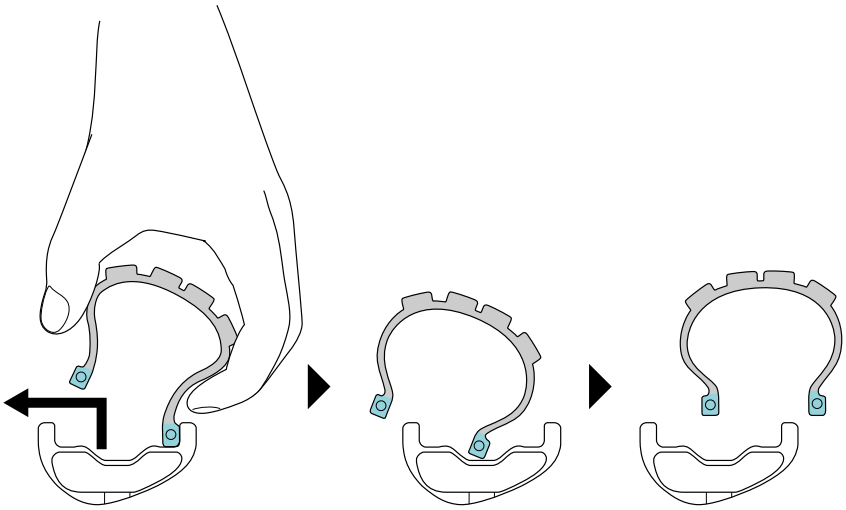

Installing an inner tube

1. **Loosen the valve lock ring and remove the air valve.**
2. **On one side of the tire, push the bead into the center groove of the rim.**

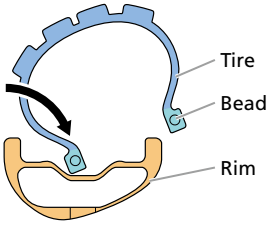

3. **Insert the inner tube into the tire.**

   Inflate the inner tube slightly to give it a firm shape, then insert it into the tire.

   NOTICE

   - Check that the air valve and size of the inner tube are appropriate for the rim and tire being used.
   - Contact your place of purchase for the specifications of inner tubes that can be used.

4. **Insert the bead from the opposite side of the air valve.**

   Be careful not to pinch the tube at this time.

   If necessary, use soapy water.

5. **Inflate the inner tube until the tire locks into place.**

SHIMANO

SHIMANO NORTH AMERICA BICYCLE, INC.
One Holland, Irvine, California 92618, U.S.A. Phone: +1-949-951-5003

SHIMANO EUROPE B.V.
High Tech Campus 92, 5656 AG Eindhoven, The Netherlands Phone: +31-402-612222
Only EU General Contact : contactshimano@shimano-eu.com

SHIMANO INC.
3-77 Oimatsu-cho, Sakai-ku, Sakai City, Osaka 590-8577, Japan

Please note: specifications are subject to change for improvement without notice. (English)

© Sep. 2025 by SHIMANO INC. ITP