Dealer's Manual

ROAD	GRAVEL	MTB
E-BIKE	LIFESTYLE	GENERAL

Rear Derailleur (Di2) / Lithium-ion Battery / Battery Charger

XTR
RD-M9250
RD-M9260

DEORE XT
RD-M8250
RD-M8260

DEORE
RD-M6250
RD-M6260

GRX
RD-RX827

SHIMANO
BT-DN320
EC-DN100

Contents

IMPORTANT NOTICE 4
TO ENSURE SAFETY 5
List of tools to be used 10
Names of parts 11
How to operate 14
Switching operation modes 14
System pairing 16
- Pairing the rear derailleur and shift switch without using E-TUBE PROJECT Cyclist 16
- Pairing the rear derailleur and shift switch using E-TUBE PROJECT Cyclist 17

Switching to AUTO SHIFT (RD-M9260 / RD-M8260 / RD-M6260) 18
Charging the battery 19
Installation / removal 20
Installing the rear derailleur 20
Connecting / disconnecting the electric wire (RD-M9260 / RD-M8260 / RD-M6260) 22
- Disconnecting the electric wire 22
- Connecting the electric wire 23

Installing / removing the battery 27
Adjustment 28
Checking the chain length 28
Installing the chain 30
Adjusting the rear derailleur 31
- Adjusting the B-screw 31
- Gear shifting adjustment 31
- Adjusting the low / high limits 33

Connection and communication with devices 36
E-TUBE PROJECT 36
Items configurable in E-TUBE PROJECT 37
Wireless function 38
- Function 38

Maintenance 39
Replacing the pulleys 39
Removing the plate and replacing the P-tension spring 40
- Removal 40
- Installation 42
Replacing the B-axle 45
Replacing the outer link cap (RD-M9250 / RD-M8250 / RD-M6250 / RD-RX827) 46
Replacing the outer link bumper (RD-M9260 / RD-M8260 / RD-M6260) 47
Troubleshooting 48
When a problem occurs 48

IMPORTANT NOTICE

- **This dealer's manual is intended primarily for use by professional bicycle mechanics.**

  Users who are not professionally trained for bicycle assembly should not attempt to install the components themselves using the dealer's manuals.

  If any part of the information on the manual is unclear to you, do not proceed with the installation. Instead, contact your place of purchase or a distributor for assistance.
- Make sure to read all manuals included with each product.
- Do not disassemble or modify the product other than as stated in the information contained in this dealer's manual.
- All manuals and technical documents are accessible online at https://si.shimano.com .
- For consumers who do not have easy access to the internet, please contact a SHIMANO distributor or any of the SHIMANO offices to obtain a hardcopy of the user's manual.
- Please observe the appropriate rules and regulations of the country, state or region in which you conduct your business as a dealer.
- The Bluetooth ® word mark and logos are registered trademarks owned by the Bluetooth SIG, Inc. and any use of such marks by SHIMANO INC. is under license.

  Other trademarks and trade names are those of their respective owners.
- ANT ® and ANT+ ® are trademarks or registered trademarks of ANT Wireless.

For safety, be sure to read this dealer's manual thoroughly before use, and follow it for correct use.

The following instructions must be observed at all times in order to prevent personal injury and physical damage to equipment and surroundings.

The instructions are classified according to the degree of danger or damage which may occur if the product is used incorrectly.

DANGER	Failure to follow the instructions will result in death or serious injury.
WARNING	Failure to follow the instructions could result in death or serious injury.
CAUTION	Failure to follow the instructions could cause personal injury or physical damage to equipment and surroundings.

TO ENSURE SAFETY

⚠ DANGER

Be sure to also inform users of the following:

■ Lithium-ion battery

- Use the designated battery charger to charge the battery. If any non-specified items are used, fire, overheating or leakage may occur.
- Do not heat the battery or expose it to flames. If this is not observed, combustion or bursting of the battery may occur.
- Do not deform, modify, disassemble, or apply solder directly to the battery. Do not use or leave the battery in places which may exceed 60°C in temperature, such as places which are exposed to direct sunlight, inside vehicles on hot days or near stoves. If this is not observed, leakages, overheating or bursting may cause fire, burns or other injury to occur.
- Do not connect the (+) and (-) terminals with metallic objects. Do not carry or store the battery together with metallic objects such as necklaces or hairpins. If this is not observed, short-circuits or overheating may occur, resulting in burns or other injury.
- If any liquid leaking from the battery gets into your eyes, immediately wash the affected area thoroughly with clean water such as tap water without rubbing your eyes, and seek medical attention immediately. If this is not done, the battery liquid may damage your eyes.
- If the battery does not become fully charged after 4 hours of charging, stop charging. If this is not observed, fire, bursting, ignition, or overheating may occur.

■ Battery charger

- Do not get the battery charger wet and do not touch or hold it while it is wet or with wet hands. If this is not observed, issues with operation or electric shocks may occur.
- Use an AC adapter with a USB port with a voltage of 5.0 V DC and with a current equal to or higher than 1.5 A DC. If the one with a current lower than 1.5 A is used, the AC adapter may heat up, potentially causing a fire, smoke, overheating, destruction, electric shock, or burns.

■ Rear derailleur

- Do not place the rear derailleur in water, and do not allow the terminals to get wet. If this is not observed, fire, bursting, ignition, or overheating may occur.

⚠ WARNING

- **Be sure to follow the instructions provided in the manuals when installing the product.**

  Only use SHIMANO genuine parts. If a component or replacement part is incorrectly assembled or adjusted, it can lead to component failure and cause the rider to lose control and crash.
- Wear approved eye protection while performing maintenance tasks such as replacing components.

Be sure to also inform users of the following:

- Do not disassemble or modify the product. This may cause the product to not operate correctly, and you may suddenly fall and be seriously injured.

■ Lithium-ion battery

- Do not place the battery into fresh water or sea water, and do not allow the battery terminals to get wet. Doing so may cause overheating, bursting, or ignition.

- Do not use the battery if it has any noticeable scratches or other external damage. If this is not observed, bursting, overheating or problems with operation may occur.
- Do not throw or subject the battery to strong shock. Doing so may cause overheating, bursting, or ignition.
- Do not use the battery if leakages, discoloration, deformation, or any other abnormalities occur. If this is not observed, bursting, overheating or problems with operation may occur.
- If any leaked fluid gets on your skin or clothes, wash it off immediately with clean water. The leaked fluid may damage your skin.
- Do not use the battery outside its operating temperature ranges. If a battery is used or stored in temperatures which are outside these ranges, fire, injury or problems with operation may occur. The operating temperature ranges for the battery are given below:

  During discharge: -10 - 50°C

  During charging: 0 - 45°C

■ Battery charger

- When connecting or disconnecting the USB cable, be sure to hold the cable by the plug. Failure to do so may cause a fire or electric shock.
- If the following symptoms are observed, stop using the device and contact your place of purchase. A fire or electric shock may be caused.
  - If heat, acrid-smell, or smoke is coming out from the plug.
  - There may be a bad connection inside the plug.
- If it thunders while charging with an AC adapter with a USB port, do not touch the battery charger, bicycle, or the AC adapter. If lightning strikes, electric shocks may occur.
- Do not use a USB hub when connecting the cable to a PC USB port. This may cause a charging error or fire due to overheating.
- Do not damage the USB cable. Do not damage, process, forcibly bend, twist or pull it, bring it near hot objects, place heavy objects on it or bundle it tightly together. If it is used while damaged, fire, electric shocks or short circuits may occur.
- Do not let grease adhere to the metal terminals. A conduction failure may result.

■ Rear derailleur

- Do not throw or subject the rear derailleur to strong shock. If this is not observed, bursting, overheating or problems with operation may occur.
- Clean the chain and QUICK-LINK with an appropriate chain cleaner regularly. Intervals between maintenance depend on the use and riding circumstances. Never use alkali- or acid-based solvents such as rust cleaners. If those solvents are used the chain or QUICK-LINK might break and cause serious injury.
- Check the chain for any damage (deformation or cracking), skipping, or other abnormalities such as unintended gear shifting. The chain may break, and you may fall.
- Be careful not to let the hemming of your clothes get caught in the chain while riding. Otherwise, you may fall off the bicycle.

⚠ CAUTION

Be sure to also inform users of the following:

- Keep out of reach of children.
- When you do not use the battery for a long period, charge the battery before storage.

NOTICE

Be sure to also inform users of the following:

■ Lithium-ion battery

- The battery is not fully charged at the time of purchase. Before riding, be sure to fully charge the battery.
- If the ambient temperature is low, the battery's usable time will be shorter.
- Store the battery or bicycle with battery installed in a cool indoor location away from direct sunlight and rain. If the storage temperature is too low or too high, the performance of the battery is reduced, and its usable time will be shorter. When you use the battery after a long storage period, make sure to charge it first.
- When the battery is completely depleted, charge it as soon as possible. If you leave the battery without charging it, it will cause the battery to deteriorate.
- The battery is an exhaustible item. The battery will gradually lose its capacity to charging after repeated use. If the length of time that the battery can be used and its traveling distance become extremely short, contact the place of purchase.

■ Battery charger

- Do not apply excessive tension to the USB cable.
- Do not extend the USB cable using an extension cable etc. Extending the cable may disrupt charging.
- Charge the battery indoors to avoid exposure to rain or wind.
- Charging can be carried out at any time regardless of the battery level. Always use the dedicated battery charger and charge the battery until it is fully charged.
- Do not bundle the USB cable.

■ Rear derailleur

- The gears should be periodically washed with a neutral detergent then lubricated. In addition, cleaning the chain and QUICK-LINK with a neutral detergent and lubricating them can be an effective way of extending the life of the chain and QUICK-LINK.
- Do not use the thinners or harsh solvents to clean the products. Such solvents may damage the surface.
- If gear shifting does not feel smooth, consult the place of purchase for assistance.
- If you feel the chain or other drivetrain components skipping, consult the place of purchase for assistance.
- If there is a large amount of excess play in the pulleys and extra noise is generated while riding, replace the pulleys at your place of purchase.
- The electric wire has small waterproof plugs, so do not repeatedly connect and disconnect it too often. Doing so may impair the waterproofing.
- The components are designed to be fully waterproofed to withstand wet weather riding conditions; however, do not deliberately place them into water.
- Do not clean the bicycle with a high-pressure wash. If water gets into any of the components, operating problems or rusting may result.
- Contact the place of purchase for updates of the component firmware. The most up-to-date information is available on the SHIMANO website.
- Be careful not to get water into the E-TUBE ports when the ports are empty.
- Handle the components carefully, and avoid subjecting them to strong shock.
- Disconnect the connection between E-TUBE PROJECT Cyclist and the rear derailleur when not using E-TUBE PROJECT Cyclist. The rear derailleur does not shift gears when connected to E-TUBE PROJECT Cyclist.

- 2.4 GHz digital wireless

  This product adopts digital communication technologies in the 2.4 GHz frequency, which are used for wireless LAN, etc. It may receive interference in the following locations or environments that prevent wireless communication from being performed correctly:

  - Near a device such as a television, computer, radio, or motor, or inside an automobile or railway car
  - Near a railway crossing or railway track, television transmitting station, or radar base, etc.
  - When using the device in combination with another cordless device or some lights
- When not using Bluetooth ® LE or the ANT ® function, wireless communication function can be disabled. For the setting procedure, refer to the user's manual for E-TUBE PROJECT.

  E-TUBE PROJECT Cyclist:

  https://si.shimano.com/um/7J4MA/other_settings#task_ynb_fww_1mb

  E-TUBE PROJECT Professional:

  https://si.shimano.com/um/7J4WA/other_settings#task_qmg_snh_tlb
- Do not connect the rear derailleur to PC when it is on standby. This may cause a PC failure depending on its specifications.
- Connect the battery charger directly to the USB port on a PC, without using an intermediate device such as a USB hub.
- Do not connect two or more of the same units when connecting the electric wire. If this is not done, the units may not operate correctly.
- Do not connect or disconnect units again while unit recognition is in progress or after recognition is complete. If this is not done, the units may not operate correctly.

  Check the procedures which are given in the user's manual for the E-TUBE PROJECT when connecting and disconnecting units again.
- Do not connect two or more PC linkage devices at the same time. If two or more PC linkage devices are connected at the same time, they will not operate correctly. In addition, the PC may need to be restarted if operating errors occur.
- Do not use or leave the rear derailleur in places which may exceed 80°C in temperature, such as near fire or stoves.
- When cleaning the product, use a cloth moistened with a diluted neutral detergent.
- Products are not guaranteed against natural wear and deterioration from normal use and aging.
- For maximum performance we highly recommend SHIMANO lubricants and maintenance products.

For installation to the bicycle and maintenance

- This product has a protection function to protect it from damage if it subjected to a strong impact due to a fall or other reasons.

  If the protection function operates, derailleur adjustment may be required because the motor will return the derailleur to its original gear position.
- Contact SHIMANO INC. for information regarding the shipment of the battery charger to South Korea and Malaysia.

- Be sure to adjust the high limit screw and the low limit screw according to the instructions given in the adjustment section. If these instructions are not observed, the chain may become clamped between the spokes and the largest sprocket and the wheel may lock, or the chain may fall off the small sprocket.
- Periodically clean the shifting unit and lubricate all moving parts (mechanisms).
- If gear shifting adjustments cannot be carried out adequately, the rear dropout may not be properly aligned. Use the SHIMANO TL-RD11 to check and align the rear dropout.

■ Connection and communication with PC

The PC linkage device is needed to connect the bicycle to a PC. Using E-TUBE PROJECT Professional enables you to perform a range of tasks, such as customizing individual components or the entire system, or updating firmware.

- PC linkage device: SM-PCE02
- E-TUBE PROJECT Professional: PC application
- Firmware: Software inside each component

For installation to the bicycle

■ Notes on reinstalling and replacing components

- System pairing is required after reinstalling or replacing the shift switch or rear derailleur. Perform system pairing with a wireless connection or E-TUBE PROJECT.
- If the component configuration changes or malfunction is observed, use E-TUBE PROJECT to update the firmware of each component to the latest version and perform a check again. Also, make sure that E-TUBE PROJECT is the latest version. If the software is not the latest version, the component compatibility or the product functions may not be available.

Be sure to also inform users of the following:

■ Connection and communication with smartphone

- E-TUBE PROJECT Cyclist can be used to carry out tasks such as customizing single components or the whole system and updating their firmware, after connecting the bicycle (system or components) to a smartphone via Bluetooth ® LE.
- Disconnect the connection between E-TUBE PROJECT Cyclist and the rear derailleur when not using E-TUBE PROJECT Cyclist.

  Using the rear derailleur communication function without disconnecting the connection to E-TUBE PROJECT Cyclist increases battery consumption.

■ Compatibility with E-TUBE PROJECT

- Check the following website for information on compatibility with each unit and functional limitations:

  (https://bike.shimano.com/e-tube/project.html)

The actual product may differ from the illustration because this manual is intended mainly to explain the procedures for using the product.

List of tools to be used

The following tools are necessary for installation / removal, adjustment, and maintenance purposes.

Tool	
TL-EW300	TL-EW300
2	2 mm hexagon wrench
3	3 mm hexagon wrench
5	5 mm hexagon wrench
2	Cross head screwdriver [#2]
	Slotted screwdriver

Names of parts

RD-M9250 / RD-M8250 / RD-M6250 / RD-RX827

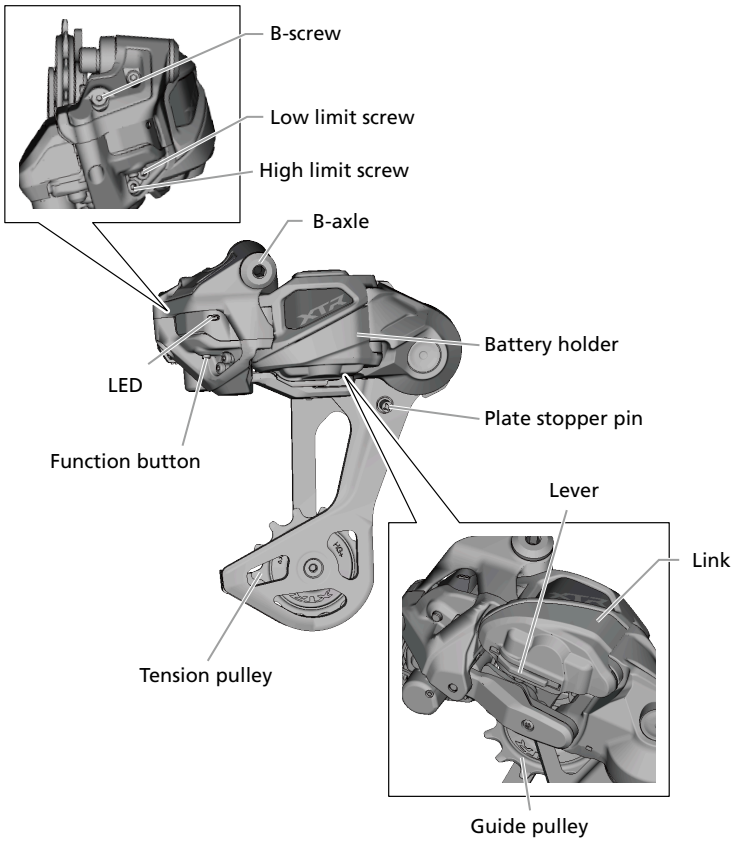

RD-M9260 / RD-M8260 / RD-M6260

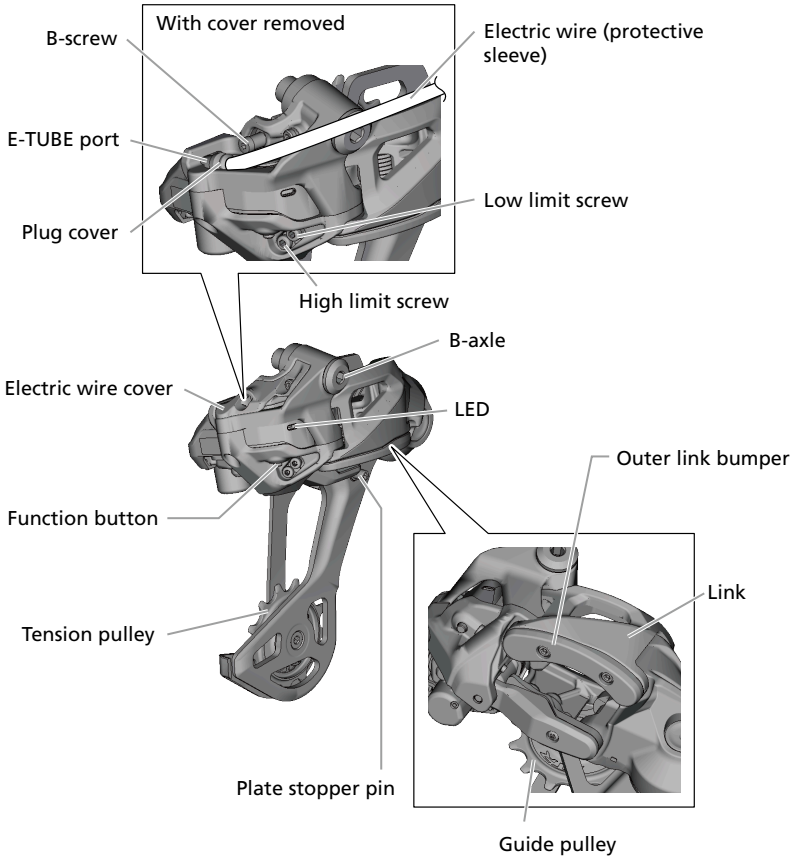

BT-DN320 (battery)

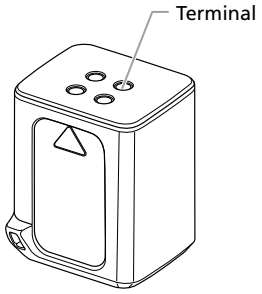

EC-DN100 (battery charger)

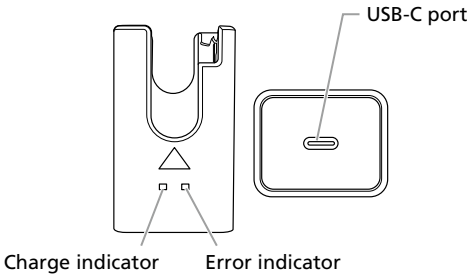

USB cable (included with this product)

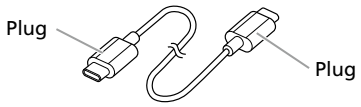

* Fully understand the precautions for use before using the product.

How to operate

Switching operation modes

The LED indication differs depending on the rear derailleur model and E-BIKE system connected.

For the setting procedure for each function, contact your place of purchase or a distributor.

System mode	Rear derailleur	Battery / E-BIKE system
Di2	RD-M9250 / RD-M8250 / RD-M6250 / RD-RX827	BT-DN320
SHIMANO E-BIKE SYSTEMS	RD-M9260 / RD-M8260 / RD-M6260	SHIMANO E-BIKE SYSTEMS drive unit
Non-SHIMANO E-BIKE		Non-SHIMANO E-BIKE system drive unit

Location of LED

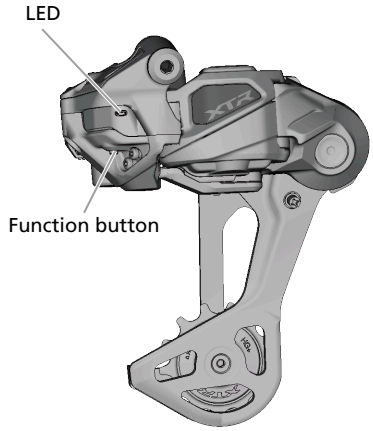

Di2

Action	Function button operation	Current mode	LED	
Checking the battery level *	Single-click	Normal mode	●	Solid green: 51 - 100%
			☀	Flashing green: 26 - 50%
			●	Solid red: 1 - 25%
			○	Off: 0%
Bluetooth ® LE connection mode	Press and hold (for 0.5 to 1.9 seconds)		☀	Flashing blue
Switching to adjustment mode	Press and hold (for 2 seconds or longer)		●	Solid yellow
Switching to normal mode	Press and hold (for 0.5 seconds or longer)	Adjustment mode	○	Off

* The battery level is also displayed when the battery is installed.

When the battery is completely drained, the derailleurs are fixed at the last gear position.

When the LED lights solid red, it is recommended to charge the battery as soon as possible because the battery level is low.

SHIMANO E-BIKE SYSTEMS

Action	Function button operation	Current mode	LED	
Switching to adjustment mode	Press and hold (for 2 to 4 seconds)	Normal mode	●	Solid yellow
Switching to AUTO SHIFT	Double-click		☀	Flashing green [AUTO 1]: Once [AUTO 2]: Twice
Switching to normal mode	Press and hold (for 0.5 seconds or longer)	Adjustment mode	○	Off

Non-SHIMANO E-BIKE (EW-EX310 is not mounted)

Action	Function button operation	Current mode	LED	
Bluetooth ® LE connection mode	Press and hold (for 0.5 to 1.9 seconds)	Normal mode	☀	Flashing blue
Switching to adjustment mode	Press and hold (for 2 to 4 seconds)		●	Solid yellow
Switching to the mode for canceling pairing with a non-SHIMANO E-BIKE system	Press and hold (for 8 seconds or longer)		☀/☀	Alternates between flashing red and flashing green: In progress
			☀	Flashing green: Deletion successful
			☀	Flashing red: Deletion unsuccessful
Switching to normal mode	Press and hold (for 0.5 seconds or longer)	Adjustment mode	○	Off

Non-SHIMANO E-BIKE (EW-EX310 is mounted)

Action	Function button operation	Current mode	LED	
Bluetooth ® LE connection mode	Press and hold (for 0.5 to 1.9 seconds)	Normal mode	☀	Flashing blue
Switching to adjustment mode	Press and hold (for 2 to 4 seconds)		●	Solid yellow
Switching to normal mode	Press and hold (for 0.5 seconds or longer)	Adjustment mode	○	Off

System pairing

You can pair with a shift switch either using E-TUBE PROJECT Cyclist or by wirelessly pairing the target products together without using E-TUBE PROJECT Cyclist.

Pairing the rear derailleur and shift switch without using E-TUBE PROJECT Cyclist

NOTICE

- Do not operate another shift switch while pairing the rear derailleur with a shift switch. Doing so may unintentionally cause pairing with the other shift switch.
- While pairing the rear derailleur with a shift switch, make sure that the power of any other unpaired shifting units is not ON. The shift switch may be unintentionally paired with another rear derailleur.
- If an unintended combination of products is paired, cancel pairing in E-TUBE PROJECT, then perform pairing again. For details on canceling pairing, see the following:

  E-TUBE PROJECT Professional User's Manual

  E-TUBE PROJECT Cyclist User's Manual

1. **Press and hold (X) and (Y) together on the shift switch until the LED of the rear derailleur lights solid blue.**

   If you are using the RD-M9260, RD-M8260 or RD-M6260, turn ON the power of the E-BIKE first.

   For information on the power operations, refer to the SHIMANO E-BIKE SYSTEMS User's Manual, etc.

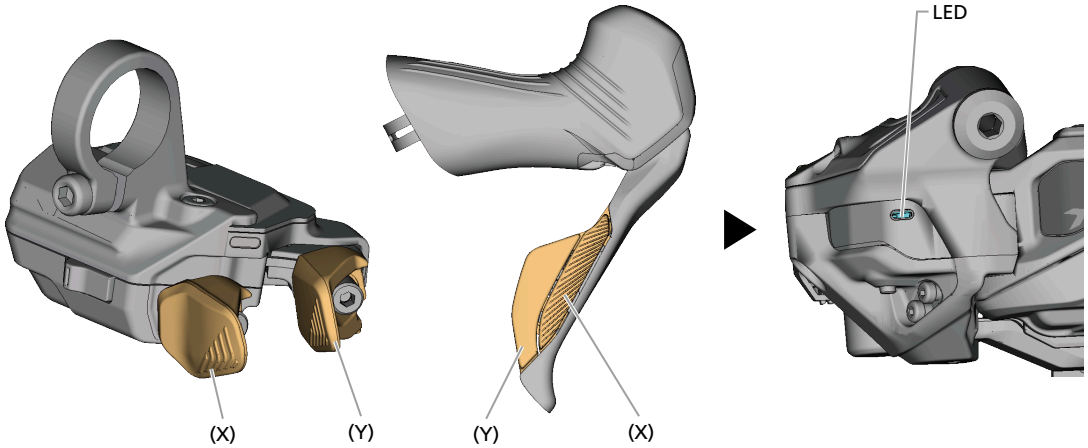

TECH TIPS

- The location and position of (X) and (Y) differ depending on the model of shift switch. Refer to the user's manual of the shift switch for details.

2. **Press and hold (X) and (Y) together on the shift switch, then remove your fingers after confirming that the LED of the rear derailleur quickly flashes blue then returns to solid blue.**

   To pair multiple shift switches, repeat step 2 .

3. **Press the function button of the rear derailleur.**

When the LED flashes green several times, pairing is complete.

After pairing, operate the shift switch to confirm that the rear derailleur functions normally.

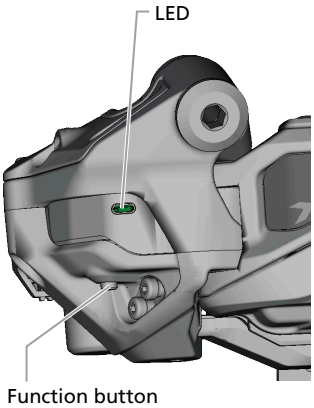

Pairing the rear derailleur and shift switch using E-TUBE PROJECT Cyclist

E-TUBE PROJECT Cyclist can be used to perform wireless system pairing of the rear derailleur and shift switch.

For details, refer to the user's manual for E-TUBE PROJECT Cyclist .

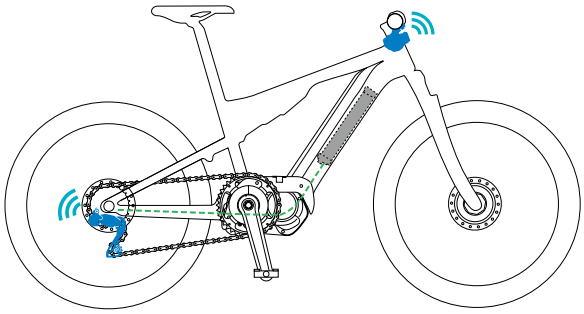

Switching to AUTO SHIFT (RD-M9260 / RD-M8260 / RD-M6260)

The AUTO SHIFT settings can be switched by double-clicking the function button when the rear derailleur is connected to a SHIMANO E-BIKE SYSTEMS drive unit.

You can customize the settings for AUTO SHIFT in E-TUBE PROJECT Cyclist and register them as [AUTO 1] and [AUTO 2].

* [AUTO 2] can be disabled in E-TUBE PROJECT. In this case, it will not be selectable via the function button. For details on the function, refer to the user's manual for E-TUBE PROJECT .

Charging the battery

For information on charging the battery, refer to the user's manual for the battery charger .

Installation / removal

Installing the rear derailleur

TECH TIPS

- The rear derailleur will not shift properly if the derailleur hanger is not straight. Use TL-RD11 to check whether the derailleur hanger is straight or not.

1. **Secure the rear derailleur.**

   Be careful not to insert the B-axle in the derailleur hanger at an angle. In addition, be sure to install the rear derailleur so that the stopper plate contacts the B-tension stop with no gap in between.

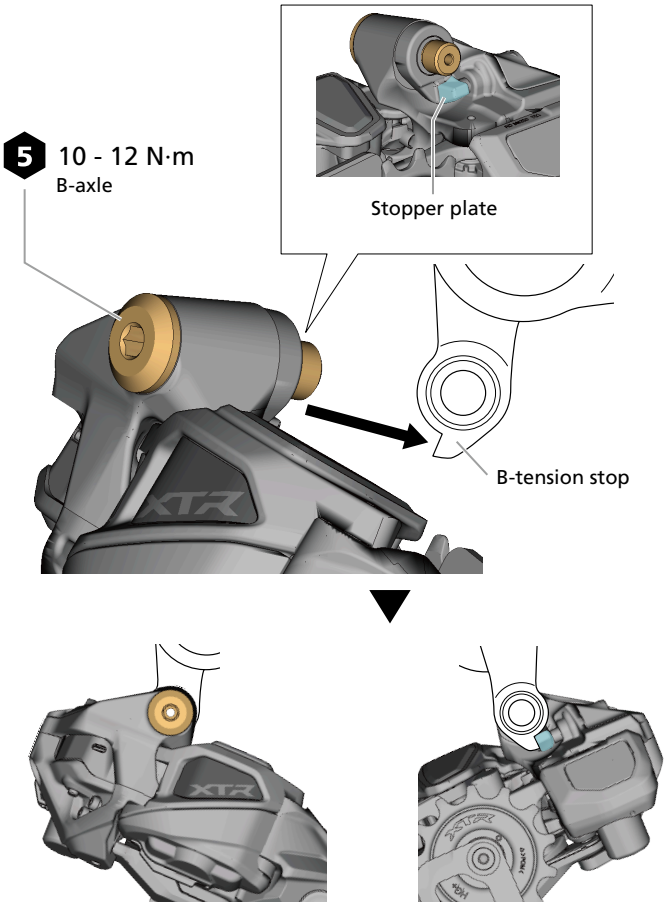

NOTICE

- Periodically check to make sure that there is no gap between the B-tension stop and the stopper plate. If there is a gap between these two parts, problems with gear shifting performance may occur.

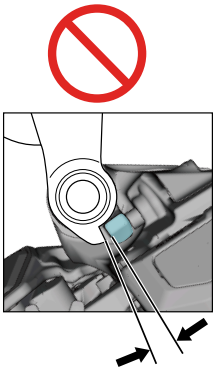

Connecting / disconnecting the electric wire (RD-M9260 / RD-M8260 / RD-M6260)

Be sure to use the SHIMANO original tool to connect and disconnect electric wires.

NOTICE

- When connecting and disconnecting electric wires, do not forcibly bend the plug. It may result in a poor connection.

Disconnecting the electric wire

1. **Remove the electric wire cover.**

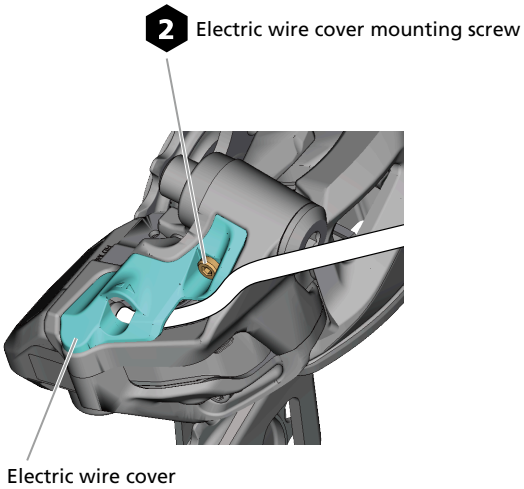

2. **Slide up the plug cover and protective sleeve.**

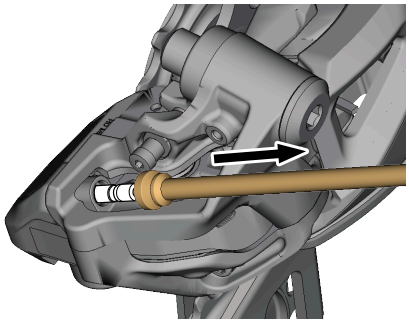

3. **Disconnect the electric wire.**

   (1) Insert the TL-EW300 into the groove on the plug of the electric wire.

   (2) Disconnect the electric wire from the E-TUBE port.

   * As shown in the figure, use part (A) of the TL-EW300 as a fulcrum, move the tool like a lever, then disconnect the plug.

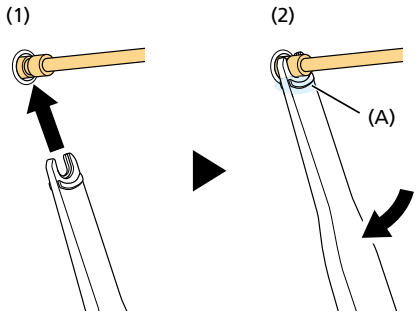

TECH TIPS

- If there is limited space to insert the tool, you can use the TL-EW300 as indicated in the figure to disconnect the electric wire.

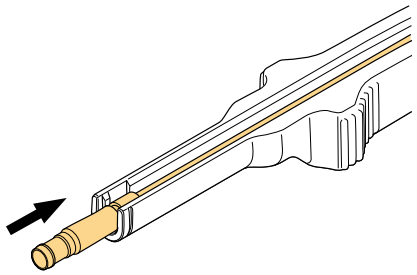

Connecting the electric wire

Connect the electric wire to the E-TUBE port.

1. Place the plug cover and protective sleeve over the electric wire.

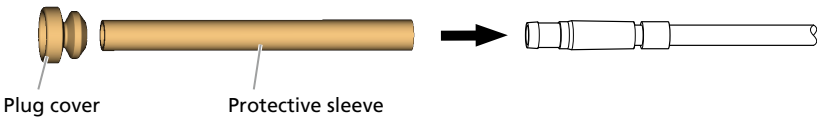

TECH TIPS

- Two sizes of protective sleeve are included: Ø4.8 mm and Ø6 mm.
  The Ø4.8 mm sleeve is for the EW-SD300 and the Ø6 mm sleeve is for the EW-PS300.
  Use the sleeve that matches the hole diameter of the frame or the electric wire.

2. Set the plug of the electric wire to the TL-EW300.

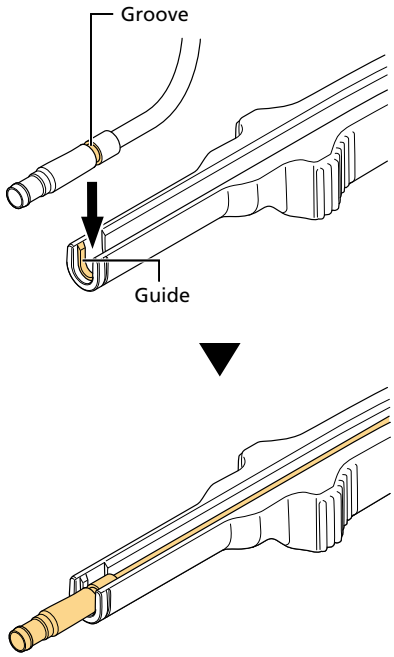

3. **Insert the plug on the electric wire into the E-TUBE port.**

   Push it straight in until you feel it click into place.

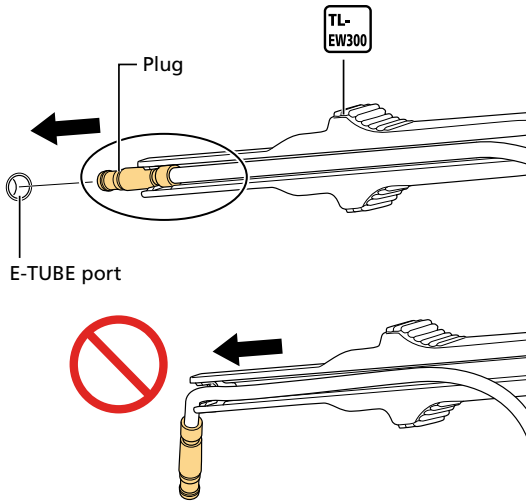

TECH TIPS

- You can use the TL-EW300 as indicated in the figure to install the electric wire.

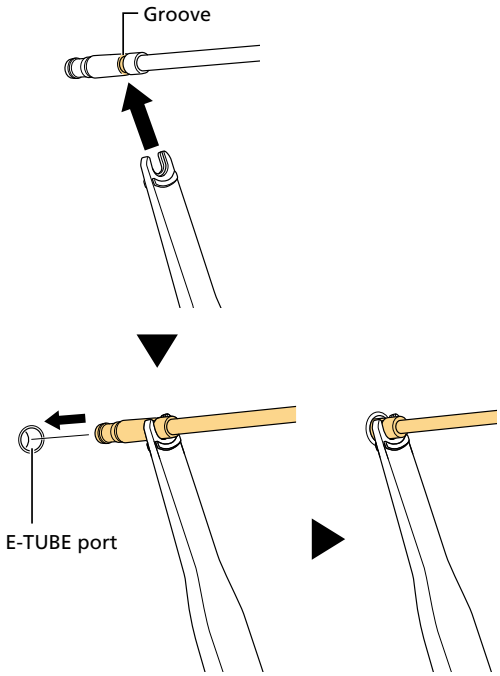

4. Slide down the plug cover and protective sleeve.

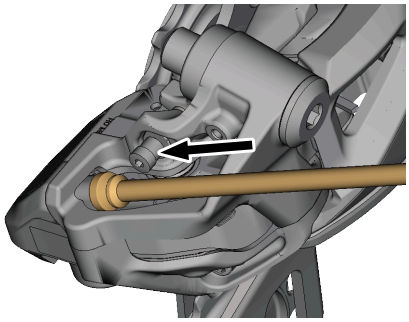

5. Install the electric wire cover.

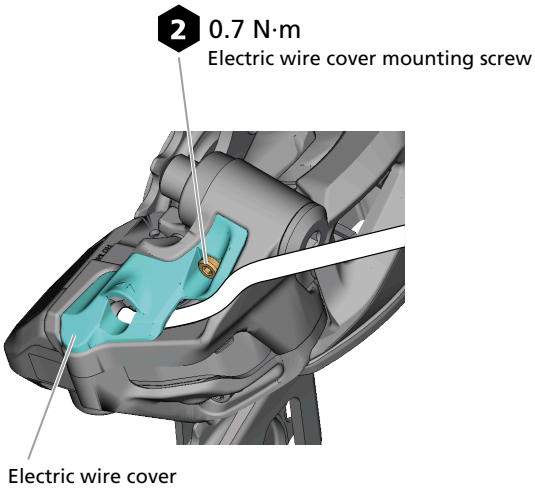

6. Check that it is operating correctly.

If the shift switch and rear derailleur are not paired, pair them and conduct an operation check.

For details on pairing, refer to “ System pairing .”

Installing / removing the battery

For information on installing the battery to the rear derailleur or removing the battery from the rear derailleur, refer to " Installation procedures " or " Removal method " in the user's manual of the rear derailleur.

Adjustment

Checking the chain length

1. **Join the chain at the largest sprocket.**

   In order to check the length at the rear of the cassette, join the two ends of the chain at the rear of the cassette as shown in the figure.

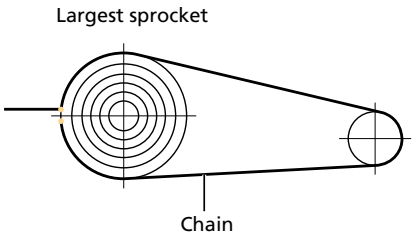

2. **Check the length of the chain.**

   With the zero point of the chain established on the rear of the largest sprocket, the proper final chain length is determined by adding a certain amount of links to this resulting chain length. The amount of links is dependent on the chain connection method. See the figures.

   * For full suspension bikes, check the length of the chain with the suspension in its fully extended, uncompressed position.

   - QUICK-LINK

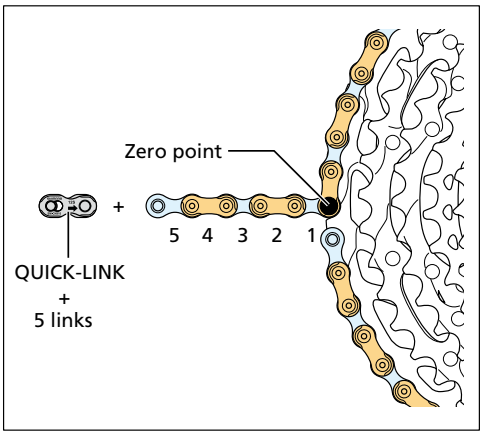

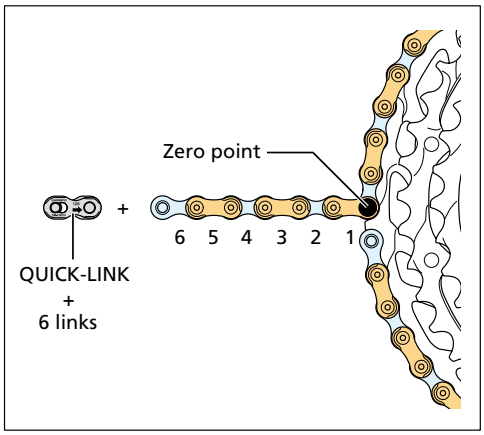

   - Connecting pin

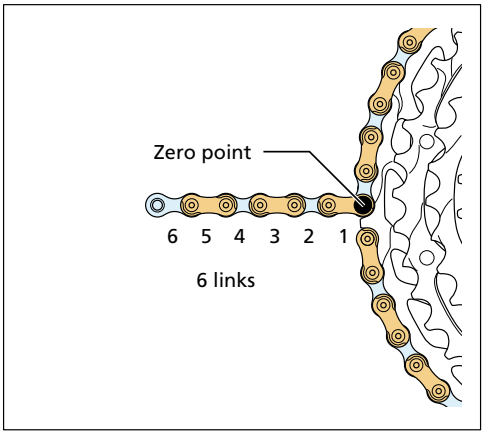

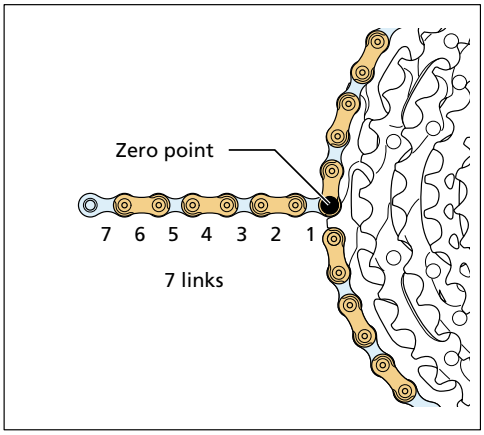

NOTICE

- The rear derailleur plate assembly is equipped with a pin or plate that prevents chain derailment. When routing the chain through the rear derailleur plate assembly, route it so that it is on the rear derailleur body side of the chain derailment prevention plate, as shown in the figure. If the chain is not passed through the correct position, damage may be caused to the chain or the rear derailleur.

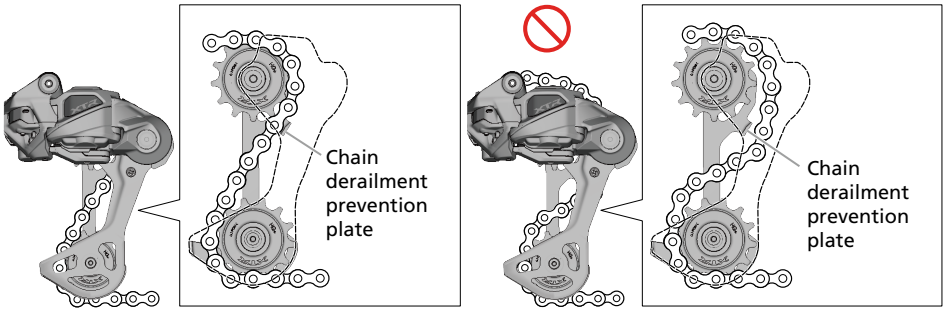

- For full suspension bikes, length [a] will vary according to the movement of the rear suspension.

  After shifting to the largest sprocket, make sure that the chain length is not too short when dimension [a] is at its maximum extension.

  If the chain length is too short, drivetrain components may be damaged due to excessive load on the drivetrain.

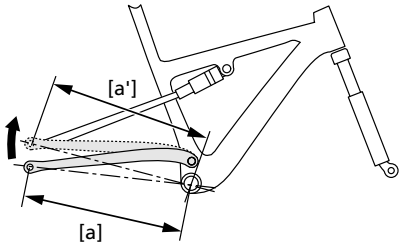

Installing the chain

Refer to the dealer's manual for the chain for instructions on installing / removing the chain.

Adjusting the rear derailleur

Adjusting the B-screw

1. **Turn the crank arm forward and shift the chain to the largest sprocket.**

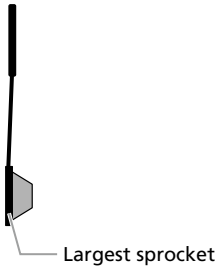

NOTICE

- If there is interference between the sprocket and plate when gear shifting, tighten the B-screw to a position that eliminates the interference.

2. **Adjust the B-screw.**

   Align the contour of the outer plate with the tip of the tallest tooth on the largest sprocket.

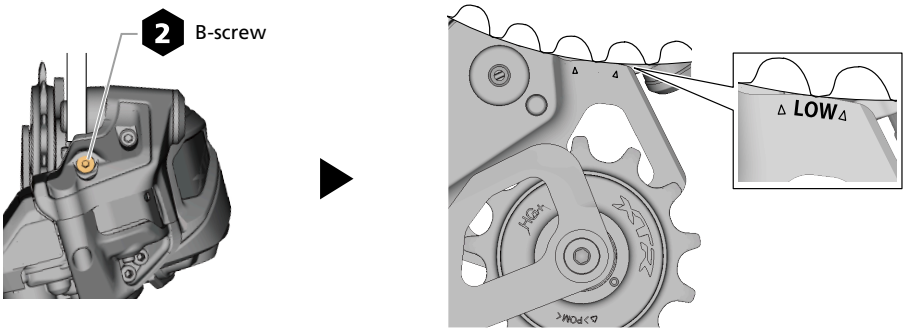

3. **Turn the crank arm and shift through all the gears to ensure the shifting is smooth.**

Gear shifting adjustment

1. **Shift to the fifth largest sprocket.**

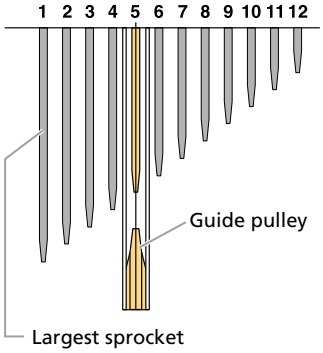

2. **Switch the system to adjustment mode.**

Press and hold either the function button on the rear derailleur or switch (A) on the shift switch for 2 to 5 seconds, until the LED turns yellow. The LED lights solid yellow when the system switches to adjustment mode.

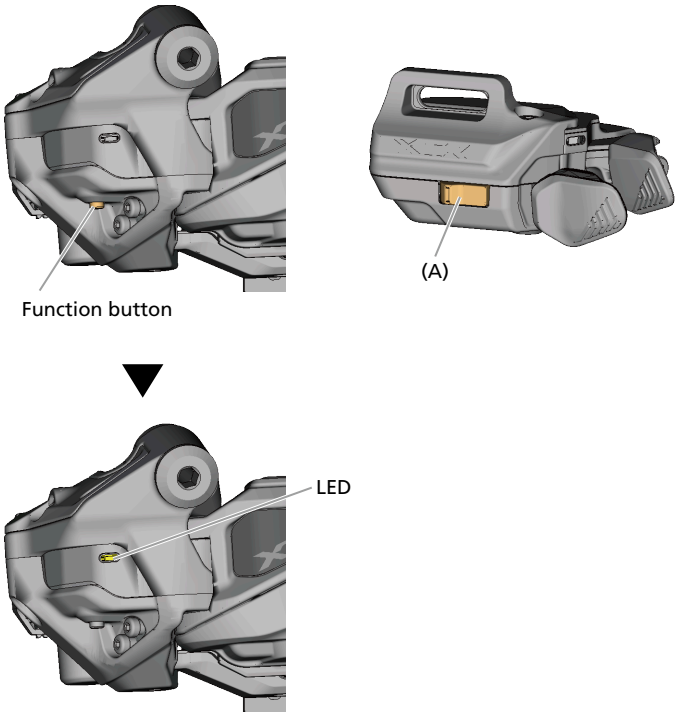

NOTICE

- Make sure to switch the system to the adjustment mode with the wheels stopped. The system cannot be switched to the adjustment mode while the wheels are rotating.
- Switch the system to the adjustment mode after confirming that the rear derailleur can perform gear shifting.

3. **Press shift switch (X) while turning the crank arm, and move it to the position where the chain makes contact with the fourth gear and a subtle noise is heard.**

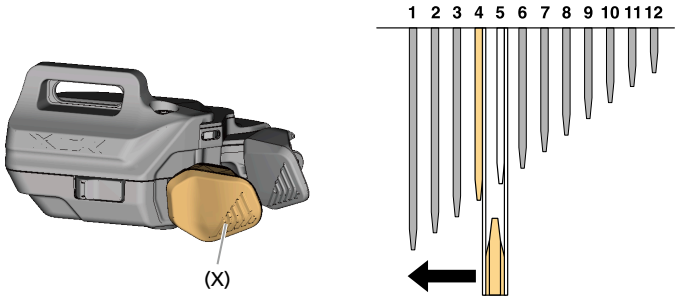

TECH TIPS

- The derailleur can adjust 18 steps inward and 18 steps outward from the initial position, for a total of 37 positions.

- In adjustment mode, the guide pulley will overrun slightly, then move back in an exaggerated manner so that you can check the adjustment direction. When checking the positions of the guide pulley and the gear, perform the check when the rear derailleur has come to a stop.
- If a noise is not heard when the guide pulley is moved at the fifth gear, perform the same adjustment around the third or fourth gear.

4. **Press shift switch (Y) five times, and move the guide pulley five steps toward the smallest sprocket.**

   This position will serve as the target for adjustment.

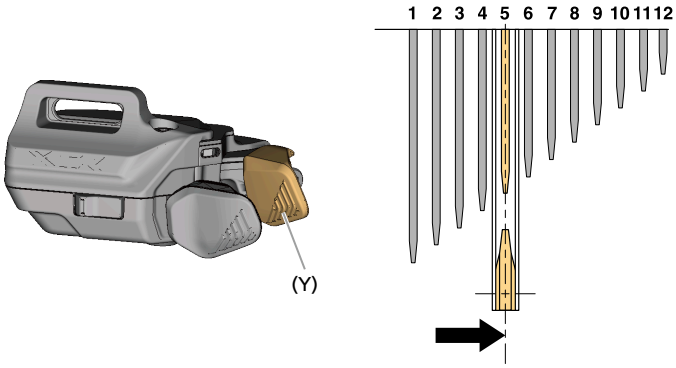

5. **Switch the system back to normal mode.**

   Press and hold the function button of the rear derailleur for 0.5 seconds or longer, or switch (A) of the shift switch for 2 seconds or longer.

   When the gear shifting system switches back to the normal mode, the LED turns off.

   If AUTO SHIFT is used with the RD-M9260, RD-M8260, or RD-M6260 which is connected to a SHIMANO E-BIKE SYSTEMS drive unit, the LED flashes green to indicate the AUTO SHIFT mode that is currently selected before turning off.

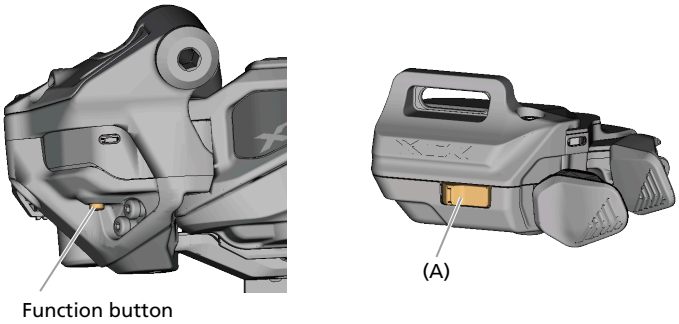

6. **Shift to each gear and check that no noise is generated at any sprocket position.**

   If fine adjustment is needed, switch back to adjustment mode and readjust the rear derailleur.

   If shifting is not possible for some gears even after adjustment, refer to " Troubleshooting ."

Adjusting the low / high limits

NOTICE

- The following issues may occur if the low / high limits are not properly adjusted:
  - Shifting to the smallest or largest sprocket is not possible. Even if the gears are shifted, the gear may shift back by one gear after approximately 5 seconds.
  - Gear shifting noise does not stop.
  - The battery level drops quickly because an undue load is being placed on the motor.
  - The motor may be damaged due to overload (irreparable).
  - The chain will become derailed from the sprocket and damage the rear derailleur, wheel, frame, etc.

1. Adjust the low limit.

(1) Shift the rear derailleur to the largest sprocket.

(2) Tighten the low limit screw until it just touches the low limit stopper.

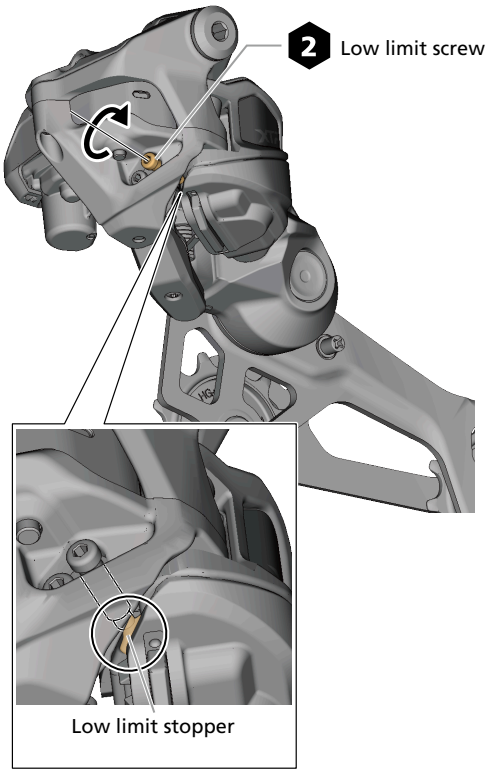

2. Adjust the high limit.

(1) Shift the rear derailleur to the smallest sprocket.

(2) Tighten the high limit screw until it just touches the high limit stopper.

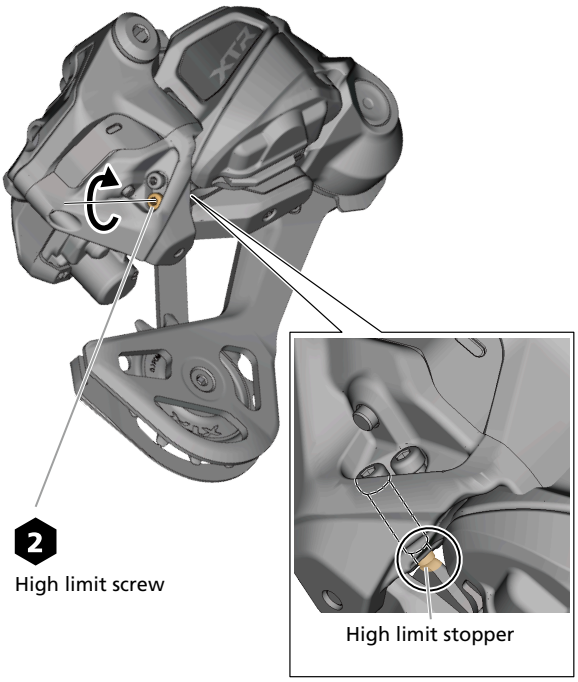

TECH TIPS

- During gear shifting, the rear derailleur may temporarily move to a position other than the target position. This ensures accurate gear shifting, and the rear derailleur will stop at the target position after the move is complete.

Connection and communication with devices

E-TUBE PROJECT

Connecting the bicycle to a device allows you to update the settings and firmware, and more.

E-TUBE PROJECT is needed to configure the settings and update firmware.

Download E-TUBE PROJECT from our support website (https://bike.shimano.com/e-tube/project.html).

For information on how to install E-TUBE PROJECT, check the support website.

NOTICE

- If your version of E-TUBE PROJECT and the firmware for each component are not up to date, there could be problems operating the bicycle. Check the version and update them to the latest ones.

TECH TIPS

- The SM-PCE02 can be used to connect the entire bicycle to a PC. For the connection procedure, refer to the user's manual for E-TUBE PROJECT Professional .
- E-TUBE PROJECT Cyclist may be used if a Bluetooth ® LE connection is established with a smartphone.
- Firmware is subject to change without notice.

Items configurable in E-TUBE PROJECT

For details on the function, refer to the user's manual for E-TUBE PROJECT.

Switch function setting	Modify the function of each shift switch.
AUTO SHIFT settings (RD-M9260 / RD-M8260 / RD-M6260)	Changes the settings for AUTO SHIFT when the rear derailleur is connected to a SHIMANO E-BIKE SYSTEMS drive unit.
Rear cassette combination settings (RD-M9250 / RD-M8250)	Switches between the SGS type and GS type.
System pairing	Performs system pairing (wireless) by reading a QR code or entering a serial code.
Multi-shift mode setting	Configures the gear-shifting interval time and gear number limit.
E-BIKE mode setting (RD-M9250 / RD-M8250 / RD-M6250 / RD-RX827)	Configure this setting when using the E-TUBE PROJECT and E-BIKE system together. It prevents excessive load from being placed on the drivetrain during consecutive gear shifts. This setting is enabled by default, so disable it when using a bicycle other than an E-BIKE.

Wireless function

A D-FLY compatible cycle computer is required to establish communication between the rear derailleur and the cycle computer. The types of information displayed on the cycle computer vary by computer model. For details, refer to the owner's manual for the cycle computer.

Function

The rear derailleur transmits the following three types of information to cycle computers or receivers via Bluetooth ® LE connection or ANT ® connection:

- Gear position (rear)
- Di2 battery level
- Adjustment mode

Maintenance

Replacing the pulleys

1. **Replace the guide pulley / tension pulley.**

   The pulleys do not have a specific direction of rotation.

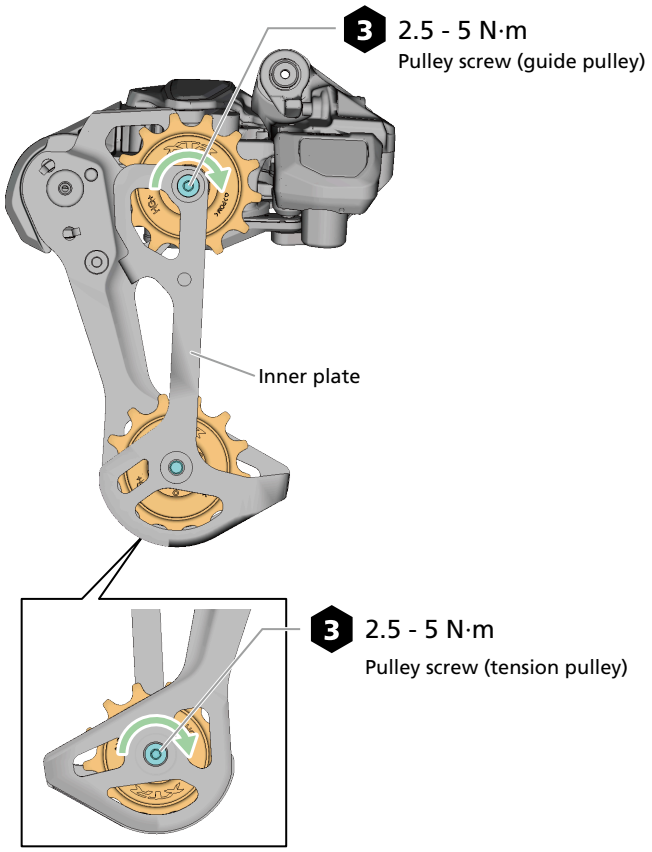

Removing the plate and replacing the P-tension spring

Removal

Before replacing the plate or P-tension spring, remove the rear wheel and chain, and shift the rear derailleur to the low side (largest sprocket) position.

Then turn the power of the bicycle OFF or remove the battery of the rear derailleur.

1. **Remove the plate stopper pin.**

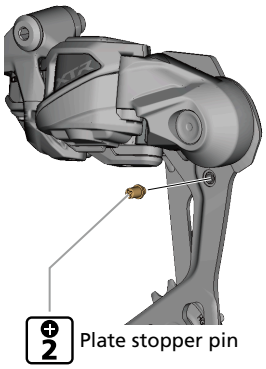

NOTICE

- Hold the plate and rear derailleur body firmly when working, as there is spring force applied to the plate.

2. **Turn the plate to loosen the P-tension spring.**

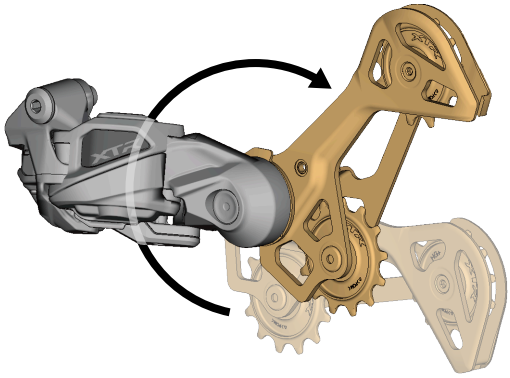

3. **Remove the plate axle cap.**

   When using a tool with a flat end, such as a slotted screwdriver, take care to ensure that you do not damage the plate axle cap.

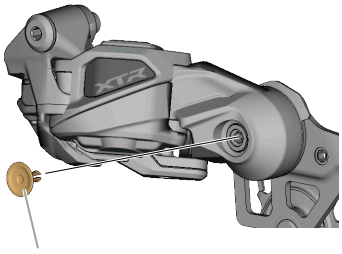

TECH TIPS

- If it is difficult to remove the plate axle cap, push it out from the back side of the rear derailleur using a tool that can be inserted into the hole of the plate axle screw on the back side of the rear derailleur, such as a 2 mm hexagon wrench.

  When using a hexagon wrench, use one with a flat tip.

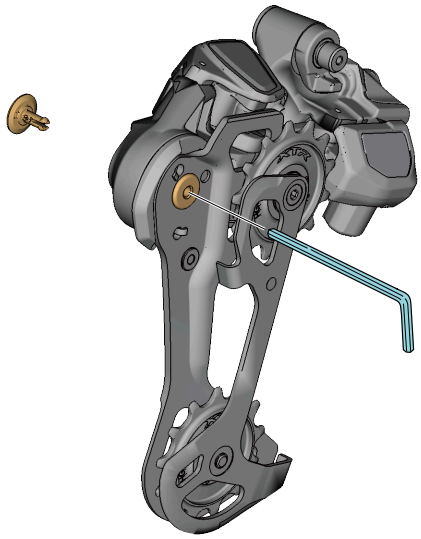

4. Remove the plate axle.

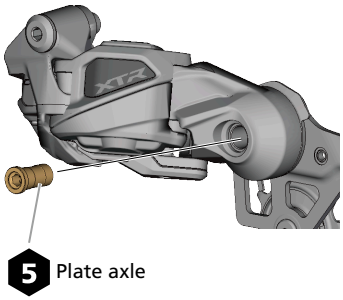

5. Detach the plate.

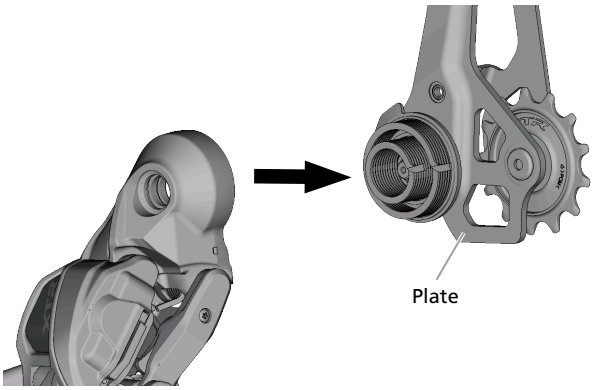

TECH TIPS

- For the RD-M9250 or RD-M8250, you can replace the plate unit to switch between the SGS type and GS type.

  If you switch the type, configure the type again in E-TUBE PROJECT Professional to ensure the optimal gear shifting performance for each type.

  For details, refer to the user's manual for E-TUBE PROJECT Professional.

Installation

1. **Install the plate bumper.**

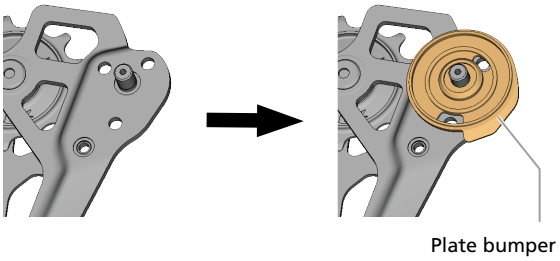

2. **Apply special grease to the plate axle screw, center of the plate bumper, and P-tension spring.**

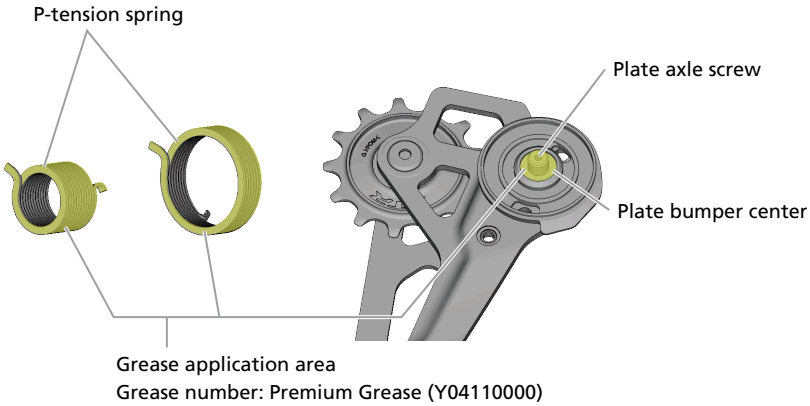

3. **Fit the tip of the P-tension springs in the hole of the plate and insert the plate into the derailleur body.**

   When performing insertion, confirm that the P-tension springs are inserted into the groove on the main

body side.

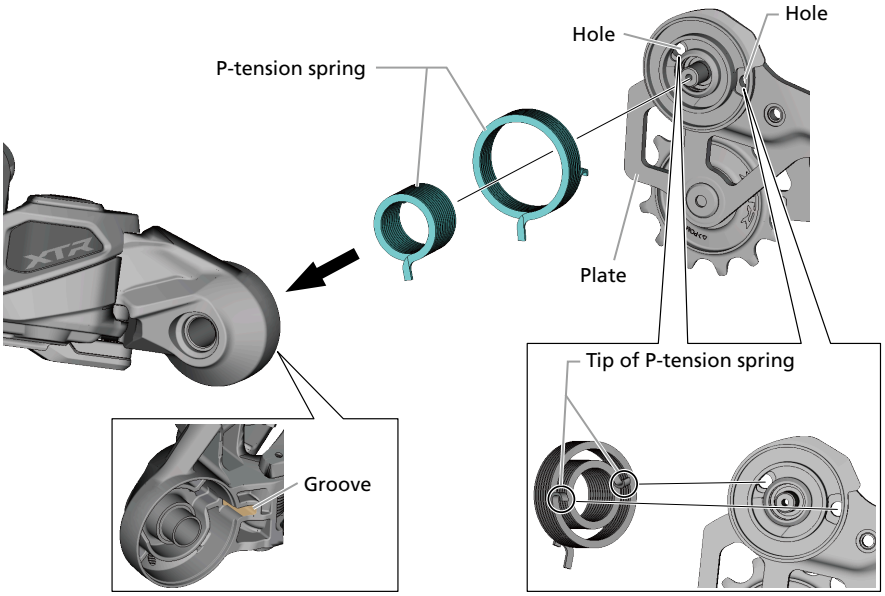

TECH TIPS

- The tip sticking out to the side when viewing the P-tension springs from above comes to the derailleur body side.

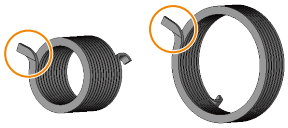

4. Install the plate axle.

Apply grease to the side of the plate axle.

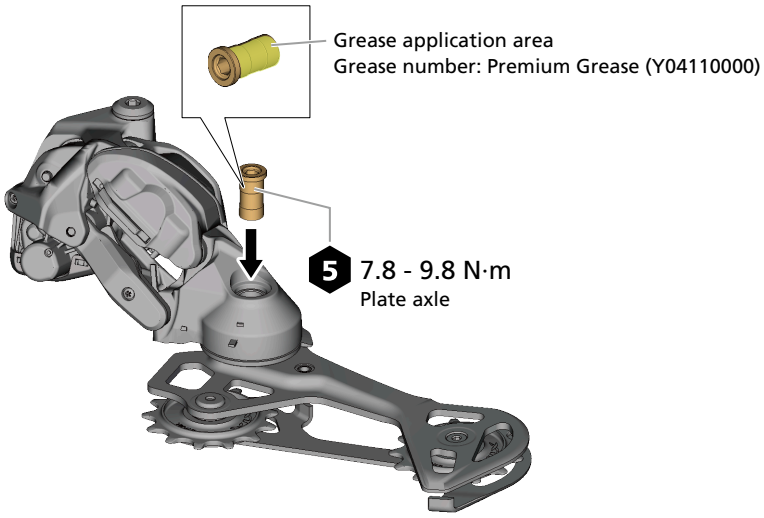

5. Twist the plate and install the plate stopper pin.

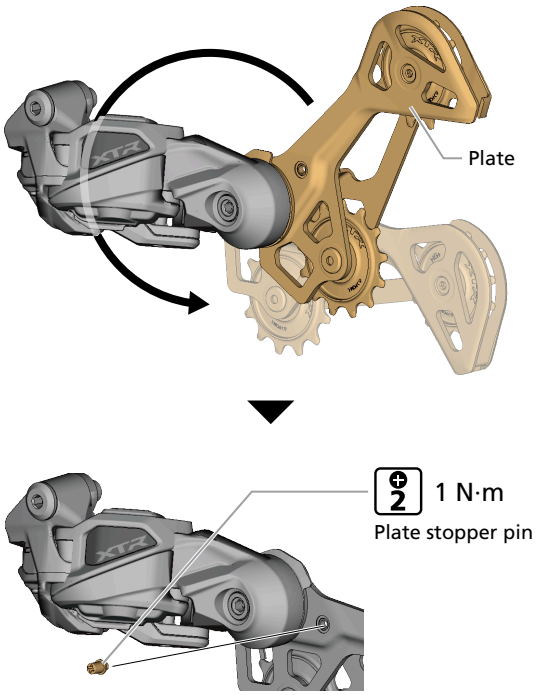

NOTICE

- Hold the plate and rear derailleur body firmly when working, as there will be spring force applied to the plate.

6. Install the plate axle cap.

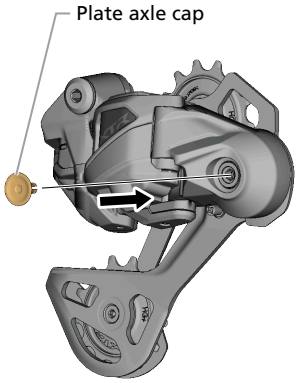

Replacing the B-axle

1. **Push the B-axle from the inner side and use a tool such as a slotted screwdriver to widen and remove the snap ring.**

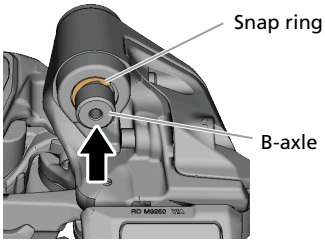

NOTICE

- Take care not to damage the screw thread with the tool such as a slotted screwdriver.

2. **Replace the B-axle unit with a new one.**

   The unit can be disassembled as shown in the figure.

   Install the parts in the reverse order that you removed them.

   Apply grease to the side of the B-axle collar.

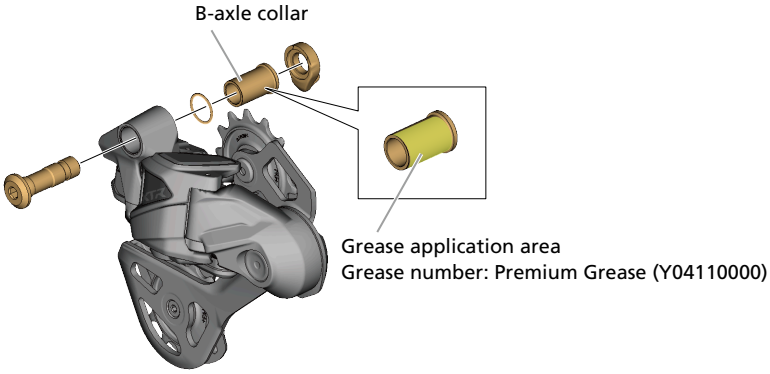

Replacing the outer link cap (RD-M9250 / RD-M8250 / RD-M6250 / RD-RX827)

1. **Remove the outer link cap using a tool with a flat end, such as a slotted screwdriver.**

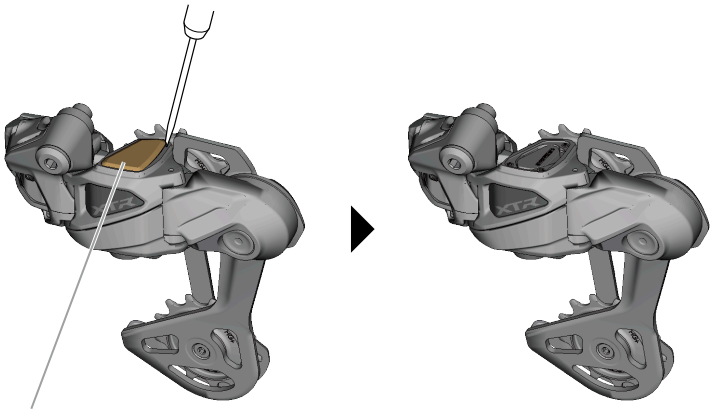

2. **Install the new outer link cap.**

   Push it in firmly until you hear a click.

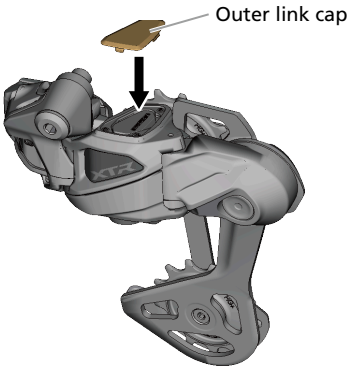

TECH TIPS

- There are three tabs on the bottom side of the outer link cap, and the outer link cap can be smoothly installed by inserting the tabs in the order indicated by numbers (1) to (3) in the figures below.

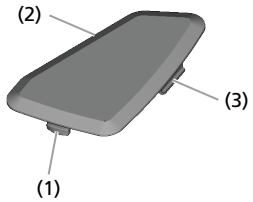

Bottom side of outer link cap

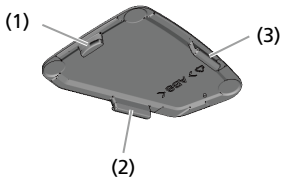

Replacing the outer link bumper (RD-M9260 / RD-M8260 / RD-M6260)

1. Remove the outer link bumper.

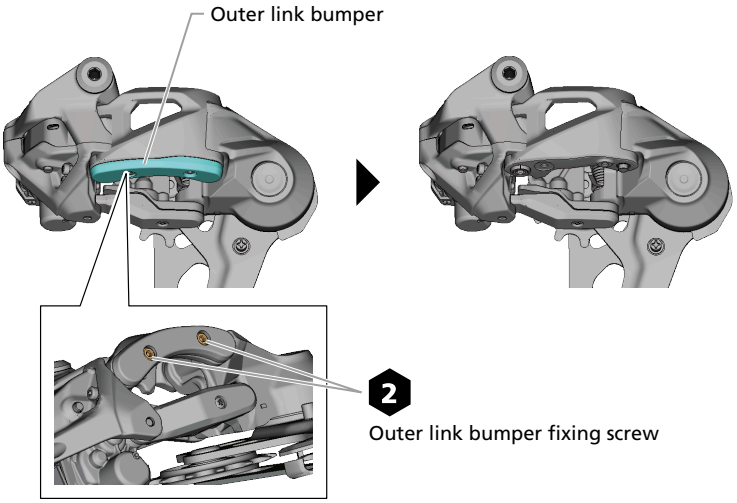

2. Install the new outer link bumper.

(1) Align the outer link bumper with the shape on the bottom of the outer link.

(2) Secure the outer link bumper with the outer link bumper fixing screws.

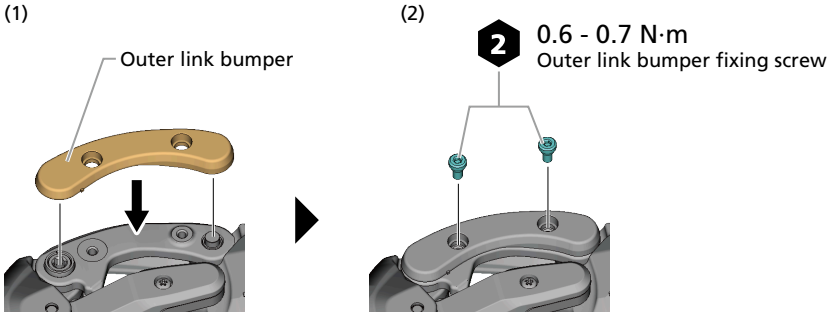

Troubleshooting

When a problem occurs

Check the following information if you have a problem with the product.

If the problem is not covered below or cannot be solved with the indicated method, contact a distributor.

Symptoms	Causes / possibilities	Remedies
Gear shifting is not performed.	Is the pairing correct?	Perform system pairing with a wireless connection or E-TUBE PROJECT Cyclist. ⇒ " Pairing the rear derailleur and shift switch without using E-TUBE PROJECT Cyclist " ⇒ " Pairing the rear derailleur and shift switch using E-TUBE PROJECT Cyclist "
	Is there sufficient charge remaining in the battery?	Charge the battery and check again. ⇒ " Charging the battery "
	Gear shifting is not performed when the switch is next operated if a certain amount of time has elapsed since the last time gear shifting was performed.	Operate the shift switch again while rotating the crank. The rear derailleur will operate slightly and gear shifting will become possible again.
	Is there sufficient charge remaining in the battery of the shift switch?	Check the battery level of the shift switch, and replace the battery if insufficient charge remains.
	The firmware may be temporarily unable to operate.	Remove the battery, and install it again.
No gear shifting is performed in any gear.	The gear shifting position may be misaligned.	Use E-TUBE PROJECT Professional to conduct an error check. Refer to " Error check " in the E-TUBE PROJECT Professional User's Manual.
A sound is heard when the rear derailleur shifts gears or operates.	The rear derailleur has a protection function to protect it from damage if it received a strong impact. If the protection function operates, derailleur adjustment may be required because the motor will return the derailleur to its original gear position.	Perform gear shifting adjustment. ⇒ " Gear shifting adjustment "
The gear-shifting interval is too long.	Is there sufficient charge remaining in the battery?	Charge the battery and check again. ⇒ " Charging the battery "

Symptoms	Causes / possibilities	Remedies
Cannot charge.	Is the USB cable connected securely?	Connect the USB cable securely, and charge the battery again. If charging is still not performed, check whether the USB cable is damaged.
	The battery may have reached the end of its life.	Replace the battery with a new one.
	Is the battery fully charged?	The charge indicator of the battery charger turns off when the battery is fully charged, but this is normal.
The battery charger and battery become abnormally hot when charging.	The temperature of the battery and battery charger may exceed the operating temperature.	When charging the battery, approximately 12°C above the ambient temperature is the normal range. If the battery becomes abnormally hot, stop charging and wait until the battery and battery charger cool down, then charge again. If the symptom still persists, contact the distributor for assistance.
	Have multiple batteries been charged in succession?	The battery charger may become hot when charging multiple batteries in succession. Wait for the battery charger to cool down between charges.
The error indicator flashes while charging.	The current may be insufficient for charging.	Use an AC adapter with a current capacity higher than 1.5 A that is compatible with a USB port. If you are using a USB hub, reconnect the USB cable to the AC adapter directly.
The LED of the rear derailleur flashes red while performing gear shifting.	The battery level may be too low to perform gear shifting.	Charge the battery and check again. If the problem is not resolved, contact the distributor. ⇒ “ Charging the battery ”

SHIMANO

SHIMANO NORTH AMERICA BICYCLE, INC.
One Holland, Irvine, California 92618, U.S.A. Phone: +1-949-951-5003

SHIMANO EUROPE B.V.
High Tech Campus 92, 5656 AG Eindhoven, The Netherlands Phone: +31-402-612222
Only EU General Contact : contactshimano@shimano-eu.com

SHIMANO INC.
3-77 Oimatsu-cho, Sakai-ku, Sakai City, Osaka 590-8577, Japan

Please note: specifications are subject to change for improvement without notice. (English)

© May 2025 by SHIMANO INC. ITP