Dealer's Manual

ROAD	GRAVEL	MTB
E-BIKE	LIFESTYLE	GENERAL

Flat Pedals

DEORE XT

PD-M8240

PD-M8140

SAINT

PD-G8040

Contents

IMPORTANT NOTICE 3
TO ENSURE SAFETY 4
List of tools to be used 5
Installation / removal 6
Installing to the crank 6
Adjustment 7
Adjusting the gripping force 7
Maintenance 8
Replacing the pins 8
Adjusting axle bearings 9
- PD-M8240 9
- PD-M8140 15
- PD-G8040 17

Installing / removing the reflectors 26

IMPORTANT NOTICE

- **This dealer's manual is intended primarily for use by professional bicycle mechanics.**

  Users who are not professionally trained for bicycle assembly should not attempt to install the components themselves using the dealer's manuals.

  If any part of the information on the manual is unclear to you, do not proceed with the installation. Instead, contact your place of purchase or a distributor for assistance.
- Make sure to read all manuals included with each product.
- Do not disassemble or modify the product other than as stated in the information contained in this dealer's manual.
- All manuals and technical documents are accessible online at https://si.shimano.com .
- For consumers who do not have easy access to the internet, please contact a SHIMANO distributor or any of the SHIMANO offices to obtain a hardcopy of the user's manual.
- Please observe the appropriate rules and regulations of the country, state or region in which you conduct your business as a dealer.

For safety, be sure to read this dealer's manual thoroughly before use, and follow it for correct use.

The following instructions must be observed at all times in order to prevent personal injury and physical damage to equipment and surroundings.

The instructions are classified according to the degree of danger or damage which may occur if the product is used incorrectly.

DANGER	Failure to follow the instructions will result in death or serious injury.
WARNING	Failure to follow the instructions could result in death or serious injury.
CAUTION	Failure to follow the instructions could cause personal injury or physical damage to equipment and surroundings.

TO ENSURE SAFETY

⚠ WARNING

- **Be sure to follow the instructions provided in the manuals when installing the product.**

  Only use SHIMANO genuine parts. If a component or replacement part is incorrectly assembled or adjusted, it can lead to component failure and cause the rider to lose control and crash.
- Wear approved eye protection while performing maintenance tasks such as replacing components.

Be sure to also inform users of the following:

- In order to ensure child safety for children using this product, children should be given instruction on the correct use after both guardians and children have fully understood the following information. Failure to follow this instruction may lead to serious injury.
- If you have replaced the short pins with long pins in order to increase the gripping force between the shoes and the pedal bodies (the force which stops shoes from slipping sideways), raise your feet from the pedals then slide them sideways to disengage your feet from the pedals. Otherwise, you may fall off the bicycle and be seriously injured.
- With one foot firmly on the ground, practice engaging and disengaging the other foot from the pedal repeatedly until you become used to the operation. If you cannot get used to this operation, install short pins instead. The type of the included pins differs depending on the model.
- Be sure to wear clothing and protective gear which is suitable for the way in which the bicycle is to be used. Because the pins are long, they may cause injury if they come into direct contact with your skin.
- Be sure to attach reflectors to the bicycle when traveling on public roads.
- Do not continue riding the bicycle if the reflectors are dirty or damaged. Otherwise, it becomes more difficult for oncoming vehicles to see you.

NOTICE

Be sure to also inform users of the following:

- Check that there is no excess play or looseness in any fastening sections before riding the bicycle.
- Before riding the bicycle, check that there is no excess play or looseness in the pins.
- If pedaling performance does not feel normal, contact your place of purchase.
- If you experience any trouble with the bearing section of the pedal, the pedal may require adjustment. Consult your place of purchase or a distributor.
- Be sure to retighten the crank arms and pedals at periodic intervals at the place of purchase or a distributor.
- Products are not guaranteed against natural wear and deterioration from normal use and aging.
- For maximum performance we highly recommend SHIMANO lubricants and maintenance products.

For installation to the bicycle and maintenance

- Be sure to retighten the cranks and pedals at periodic intervals.

The actual product may differ from the illustration because this manual is intended mainly to explain the procedures for using the product.

List of tools to be used

The following tools are necessary for installation / removal, adjustment, and maintenance purposes.

Tool	
	2 mm hexagon wrench
	2.5 mm hexagon wrench
	5 mm hexagon wrench
	8 mm hexagon wrench
	Hexalobular [#15]
	3 mm socket driver
	7 mm spanner
	10 mm spanner
	Cross head screwdriver [#1]
	Pin tightening tool * 1
	TL-PD40
	TL-PD400
	Pin or similar tool (Ø7.5 mm)
	Pick tool
	Screw extractor (M11 - M14)

* 1 It is included with the PD-M8240 and PD-G8040. Instead, external hexalobular [E5] can also be used.

Installation / removal

Installing to the crank

1. **Apply a small amount of grease to the threads.**
2. **Install the pedals.**

   The right pedal has a right-hand thread; the left pedal has a left-hand thread.

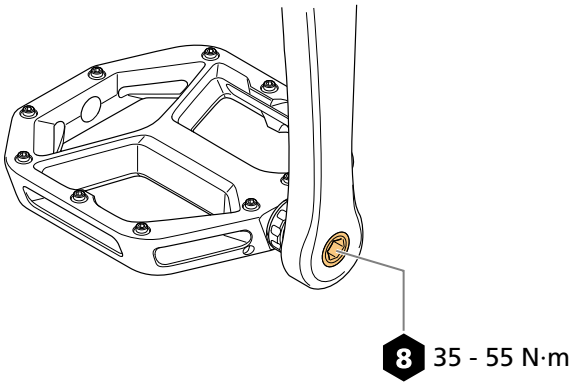

NOTICE

- Look for the grooves at the end of the threads to indicate which pedal is left and right.

Right pedal	Left pedal
 No grooves in thread	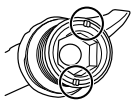 Grooves in thread

Adjustment

Adjusting the gripping force

Replace the long pins or short pins and/or change the installation positions to adjust the gripping force between the shoes and the pedal bodies.

If necessary, the pins can be installed in the positions circled in the figures.

PD-M8240

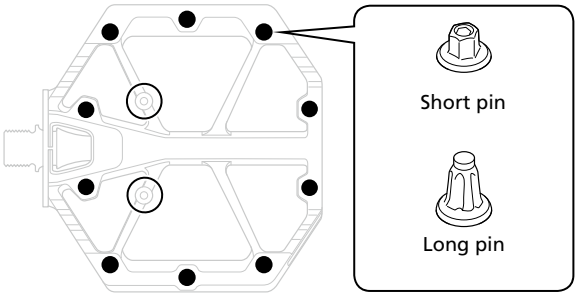

PD-M8140

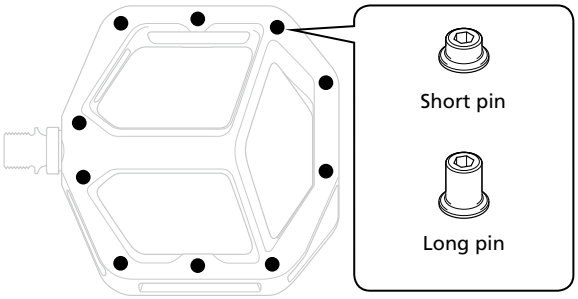

PD-G8040

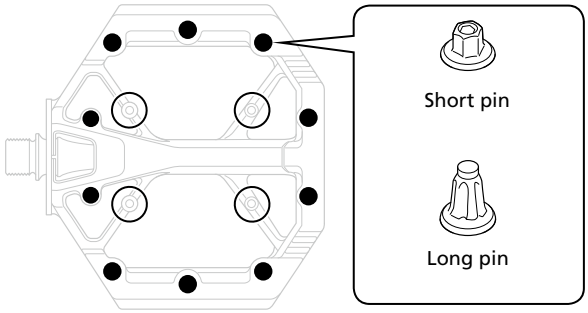

Maintenance

Replacing the pins

If the pins become worn or damaged, replace them with new pins.

1. **Replace pins as shown in the figures.**

PD-M8240

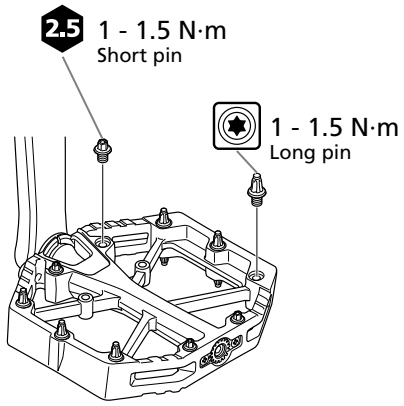

PD-M8140

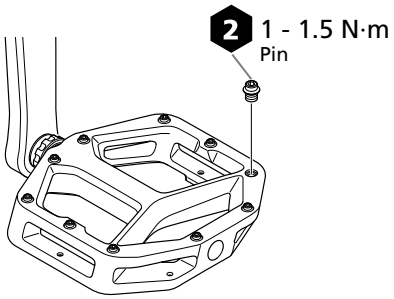

PD-G8040

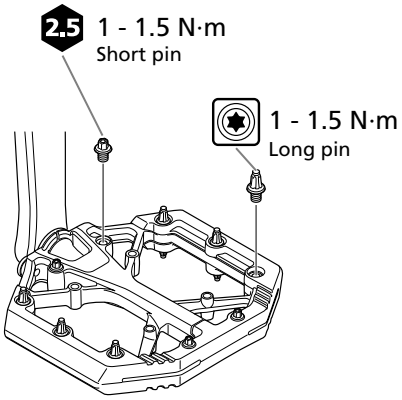

Adjusting axle bearings

Follow the procedures shown below to adjust the axle unit if the pedals do not rotate smoothly, or if rotation is loose.

PD-M8240

Reference: Exploded view

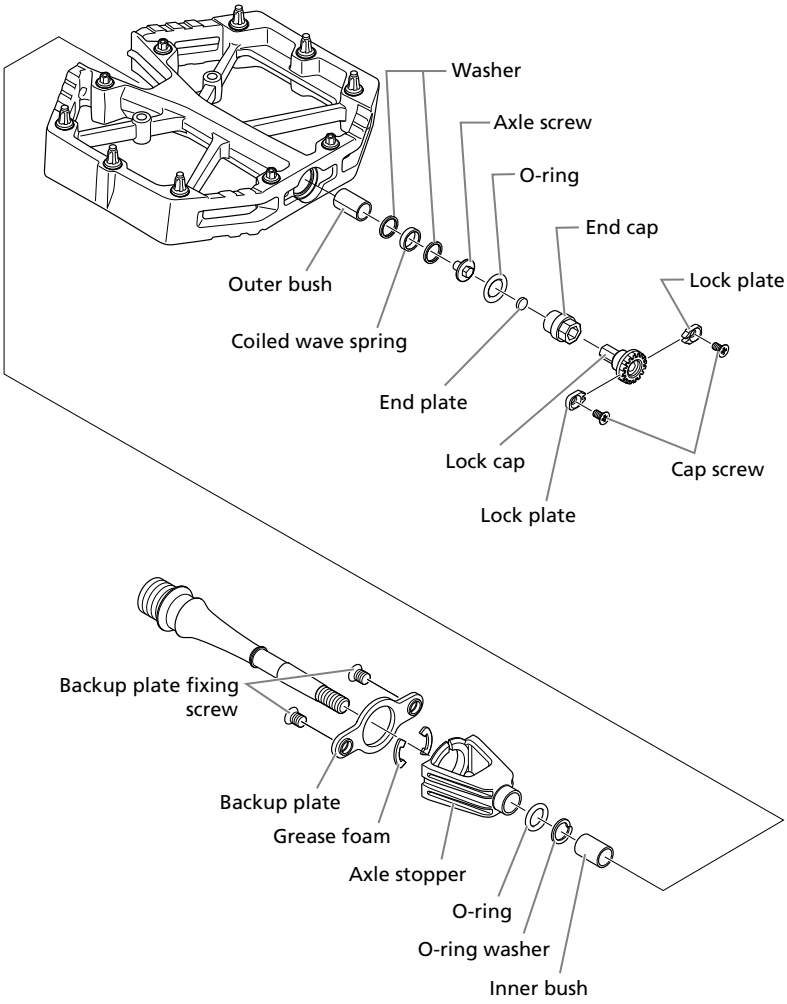

TECH TIPS

- When adjusting axle bearings without removing the axle unit, perform the procedures in step 2 and 19 through 21 .

1. Remove the backup plate fixing screw.

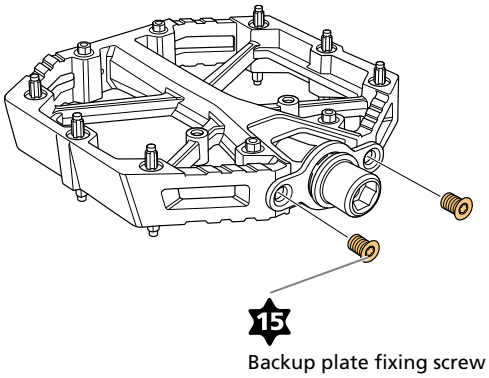

2. Remove the lock cap.

The lock cap is secured by the lock plate and cap screw.

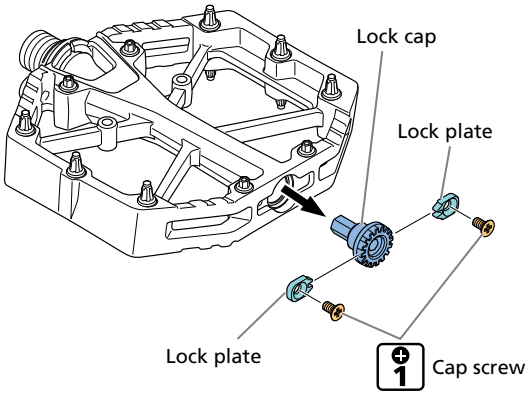

3. Remove the end cap.

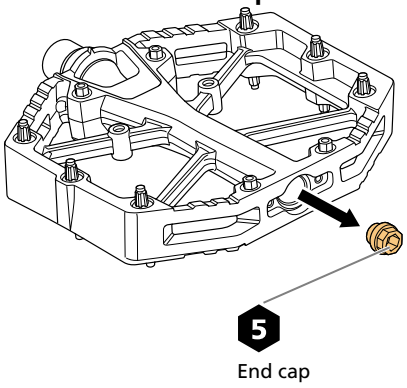

4. Remove the O-ring and end plate.

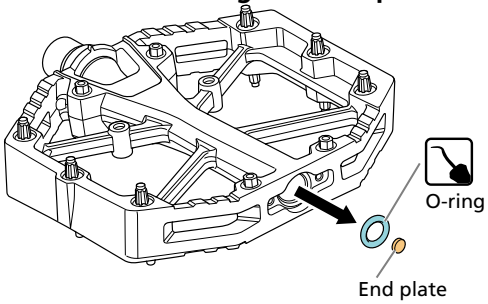

TECH TIPS

- The end plate may be sticked to the end cap.

5. **While securing the axle unit to stop it from turning, loosen and remove the axle screw.**

   The right pedal has an axle screw with a left-hand thread, and the left pedal has an axle screw with a right-hand thread.

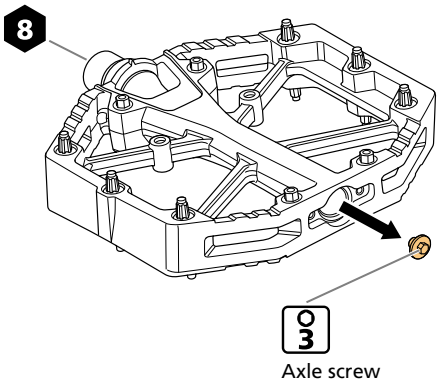

6. **Pull out the axle unit.**

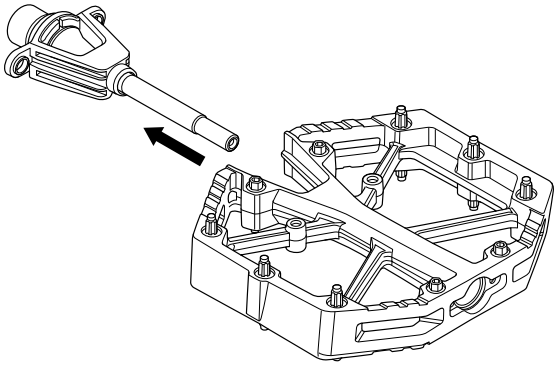

7. **Remove the O-ring, O-ring washer, and inner bush.**

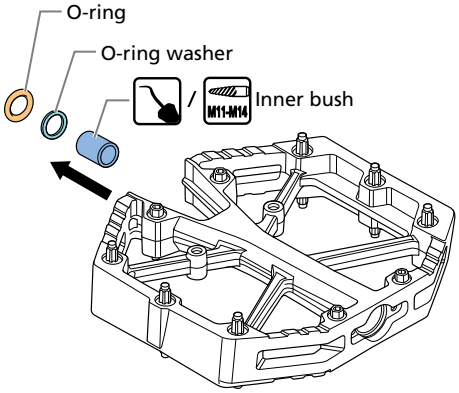

8. **Remove the washers and coiled wave spring.**

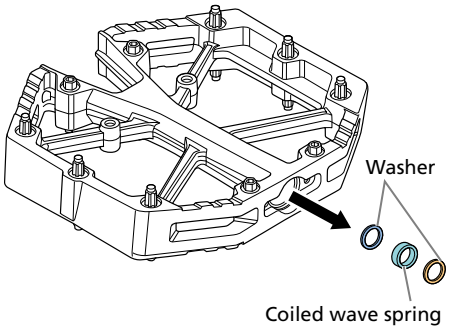

9. **Take out the outer bush.**

   Push it out from the crank axle side with a pin or similar tool (Ø7.5 mm).

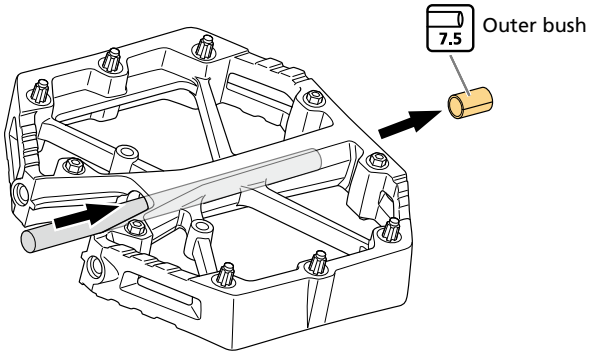

10. **Remove old grease from the axle hole, and apply a thin film of new grease (Premium Grease (Y04110000)) to the outer bush.**

> **TECH TIPS**
>
> - Apply grease to the extent that it does not flow out when the outer bush is set into the axle unit (approximately 0.5 g).

11. **Insert the new outer bush.**

    Insert it with a pin or similar tool (Ø7.5 mm).

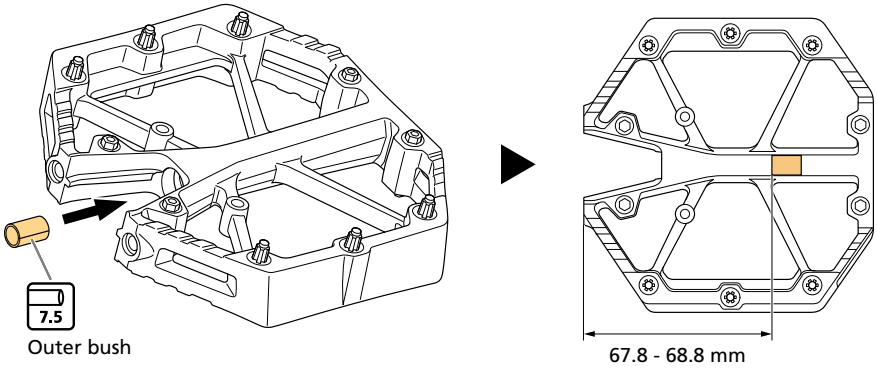

12. **Remove old grease from the axle unit, and apply a thin film of new grease (Premium Grease (Y04110000)) to the inner bush.**

TECH TIPS

- Apply grease to the extent that it does not flow out when the inner bush is set into the axle unit (approximately 0.5 g).
- When the axle stopper has been removed from the axle unit, apply sufficient grease to the area indicated in the figure before placing the axle stopper in its original position.

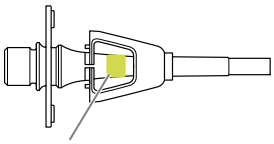

Grease number: Premium Grease (Y04110000)

13. Install the O-ring, O-ring washer, and new inner bush onto the axle unit.

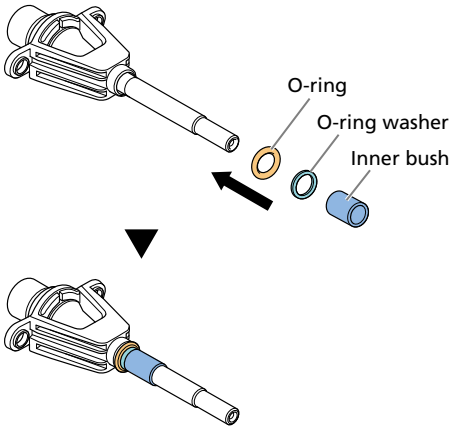

14. Insert the axle unit into the pedal body and tighten the backup plate fixing screws.

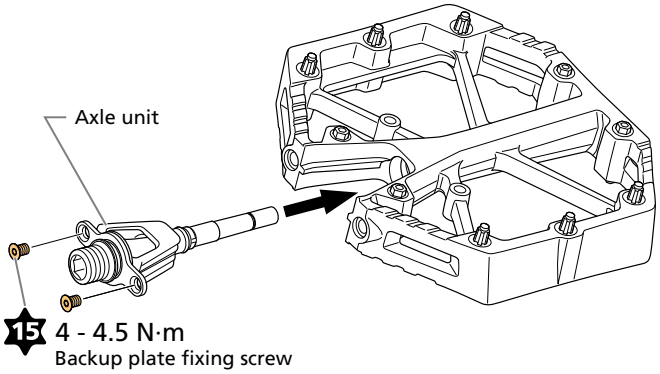

15. Install the washers and coiled wave spring.

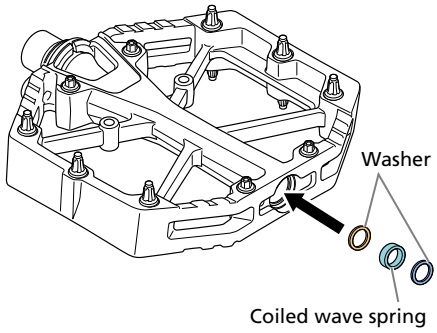

16. While securing the axle unit to stop it from turning, install the axle screw.

The right pedal has an axle screw with a left-hand thread, and the left pedal has an axle screw with a right-hand thread.

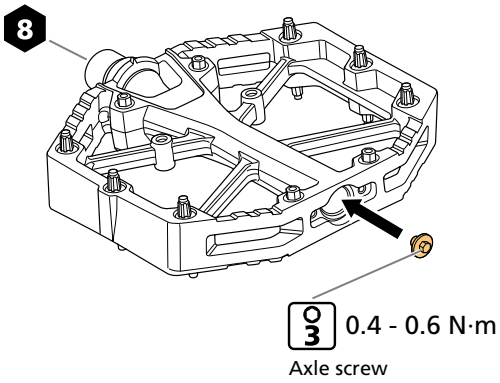

NOTICE

- Pay attention to the difference between the left and right axle screws.

For right pedal	For left pedal
 Without notch	 With notch

17. Install the O-ring.

Install the O-ring into the groove correctly with a hexagon wrench or a similar tool.

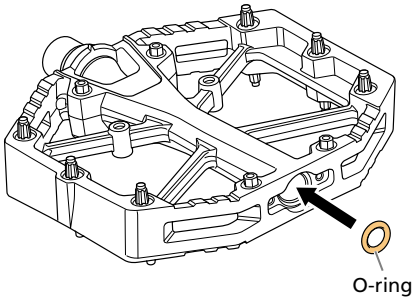

18. Apply a small amount of grease to the end plate and fit it into the end cap.

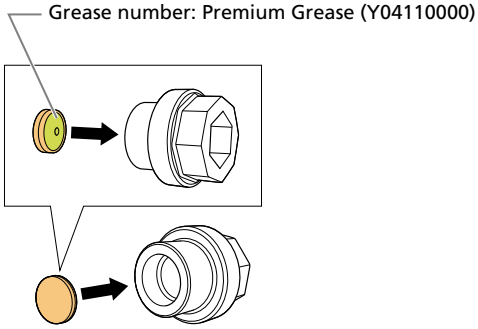

NOTICE

- Note the direction when fitting the end plate.

19. Install the end cap, then tighten it until the axle unit stops turning.

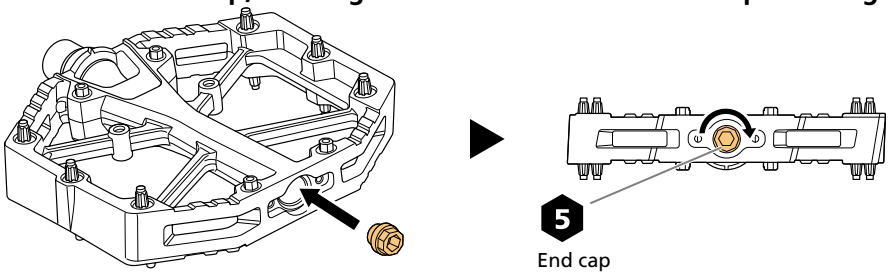

NOTICE

- The end cap should only be hand-tight. Do not overtighten the end cap.

20. Loosen the end cap 90°.

This position will serve as the standard for adjusting the rotation of the pedal.

Adjust the rotation by tightening and loosening the end cap if the pedals do not rotate smoothly, or if rotation is loose.

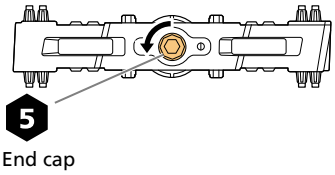

21. Secure the end cap with the lock cap.

Engage the tabs of the lock plate with the lock cap, then tighten the cap screw.

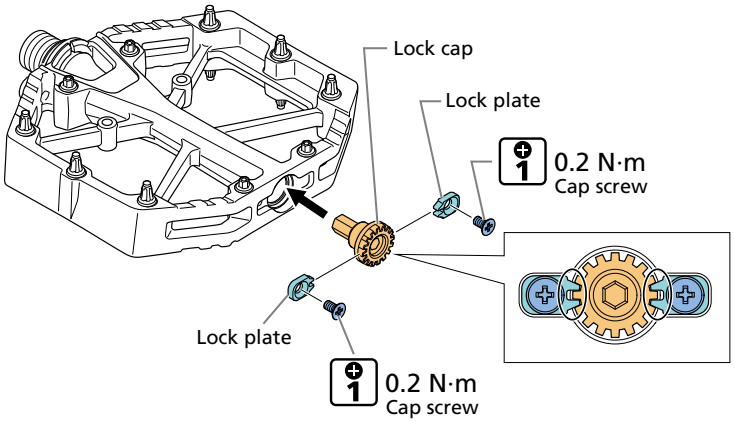

PD-M8140

Reference: Exploded view

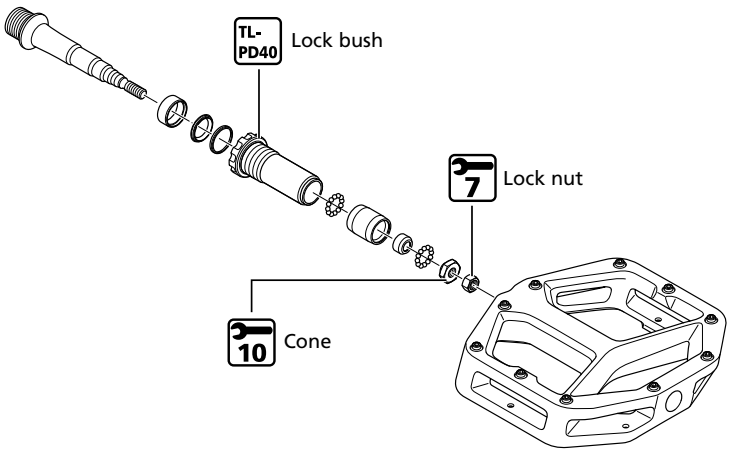

1. **Loosen the lock bush and remove the axle unit.**

   The lock bush of the right pedal has a left-hand thread; the lock bush of the left pedal has a right-hand thread.

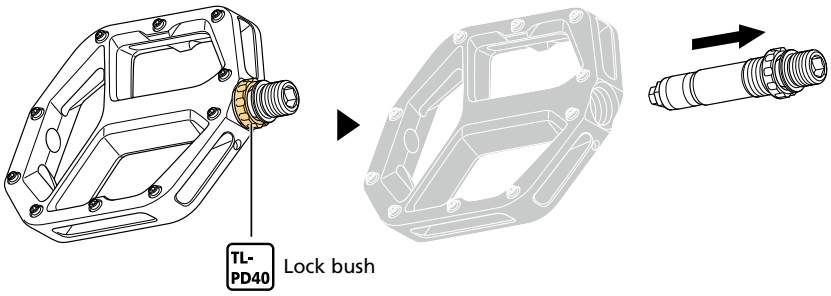

2. **Loosen the lock nut.**

   Use a vise or an axle vise to hold the axle unit in place. Use the tools indicated in the figure to perform the adjustment.

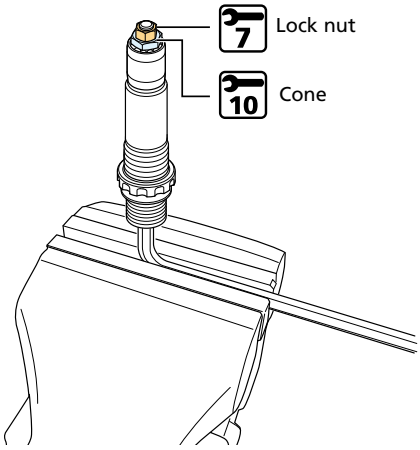

TECH TIPS

- TL-PD400 can be used on the lock nut and cone if preferred.
- Additional preload will be added to the bearing assembly when it is installed to the pedal. Adjust the bearing assembly so there is a slight amount of play initially.

3. **Turn the cone to adjust the bearing preload.**
4. **With the cone held secure, tighten the lock nut in place.**

If there is excess play in rotation after setting the axle unit into the pedal, readjust from step 2 .

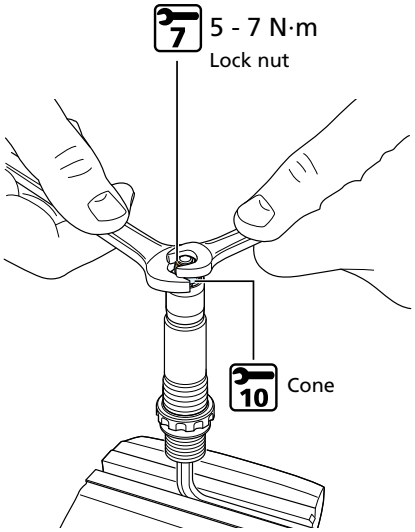

NOTICE

- Both the cone and lock nut are threaded left-hand for the right pedal and threaded right-hand for the left pedal.
- Adjust the cone so as to achieve a smooth rotation without excess play when the axle unit is set into the pedal.

5. **Remove old grease and apply an appropriate amount of new grease to the end of the axle unit.**

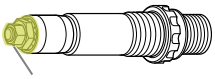

Grease number: Premium Grease
(Y04110000)

TECH TIPS

- Apply grease to the extent that it does not flow out when the axle is set into the pedal (approximately 1.5 g).

6. **Insert the axle unit into the pedal body, then tighten the lock bush.**

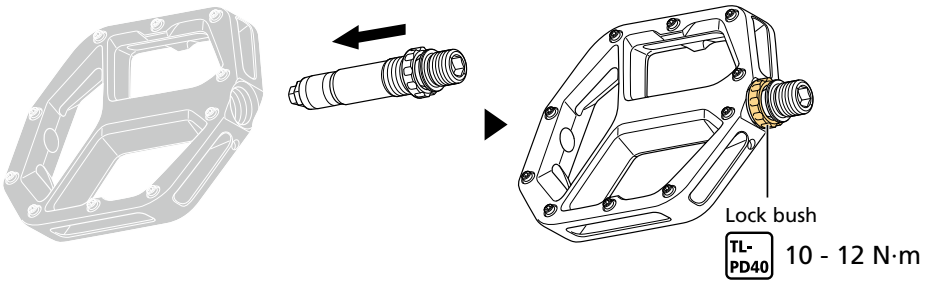

PD-G8040

Reference: Exploded view

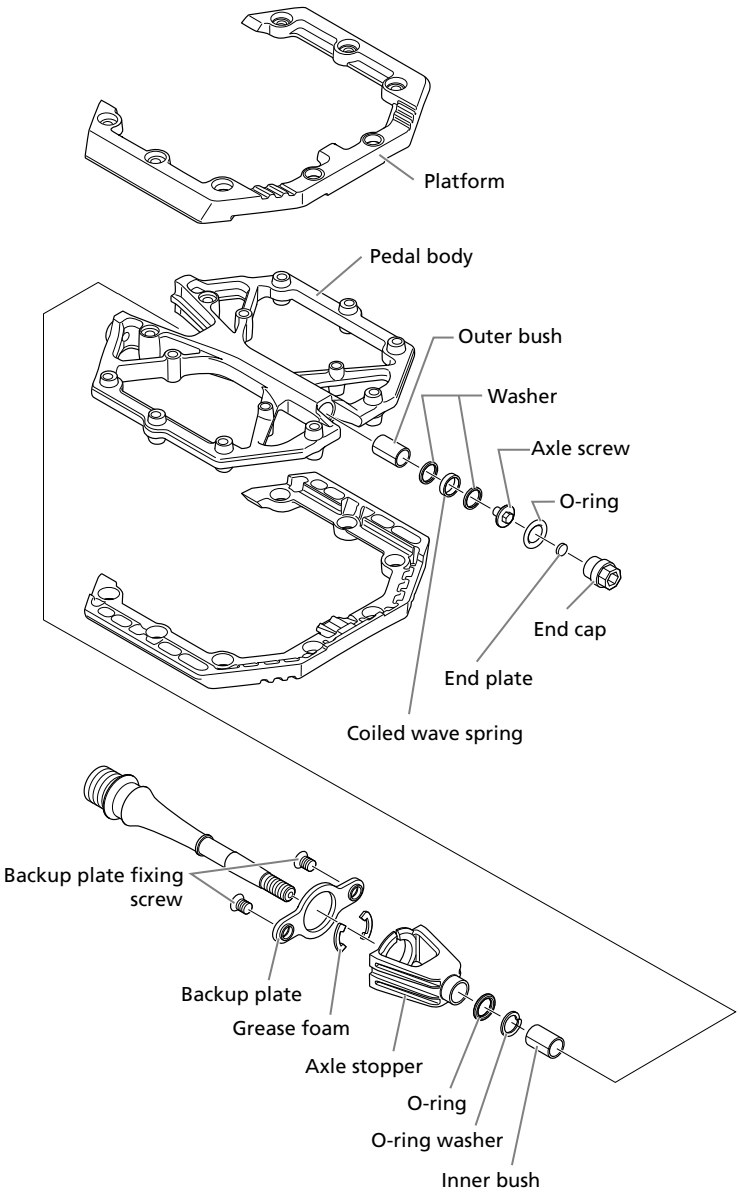

TECH TIPS

- When adjusting axle bearings without removing the axle unit, perform the procedures in step 2 and 19 through 21 .

1. Remove the backup plate fixing screw.

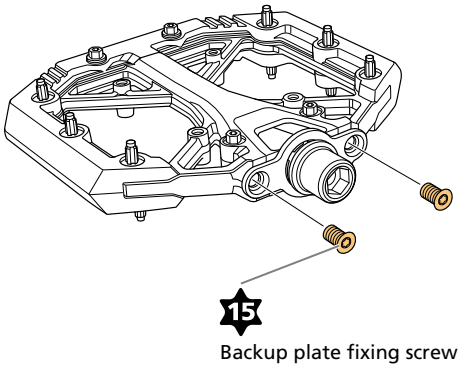

2. Remove all the pins on the platform and remove the platform from the pedal body.

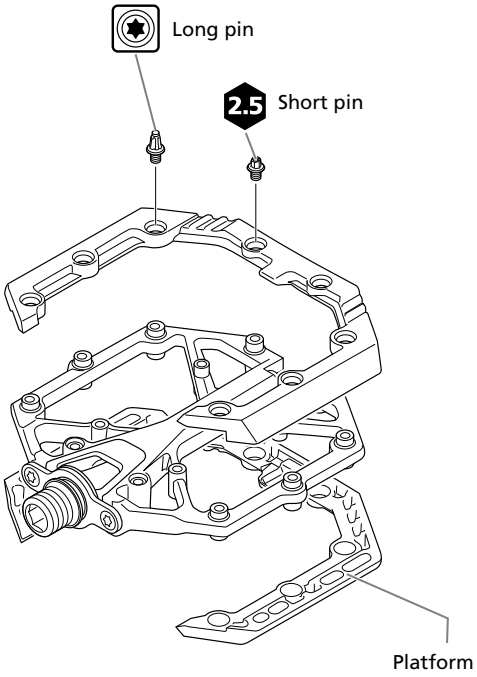

3. Remove the end cap.

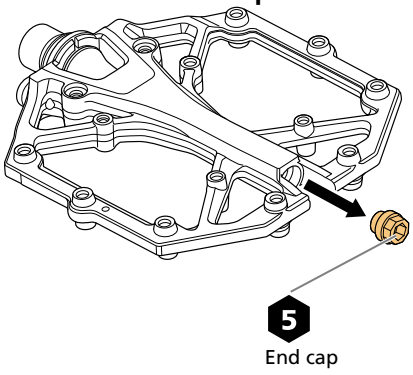

4. Remove the O-ring and end plate.

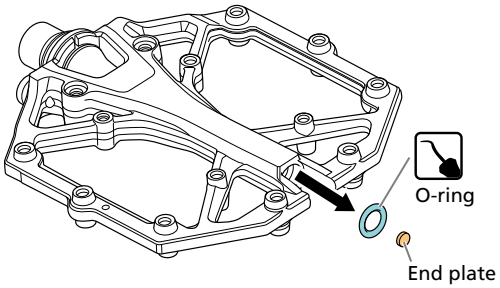

TECH TIPS

- The end plate may be sticked to the end cap.

5. **While securing the axle unit to stop it from turning, loosen and remove the axle screw.**

   The right pedal has an axle screw with a left-hand thread, and the left pedal has an axle screw with a right-hand thread.

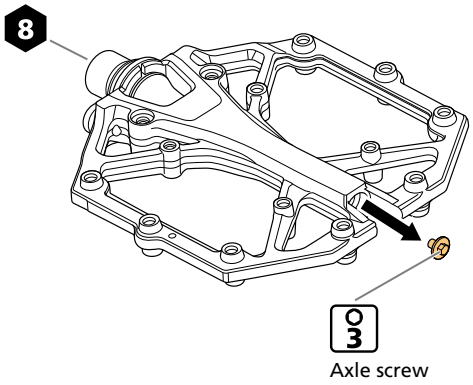

6. **Pull out the axle unit.**

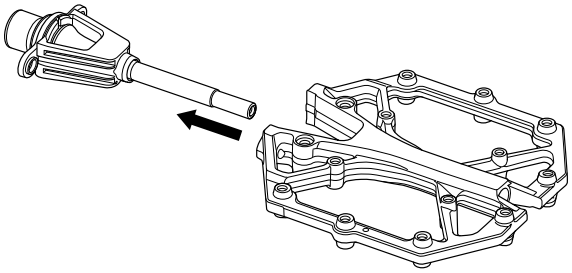

7. **Remove the O-ring, O-ring washer, and inner bush.**

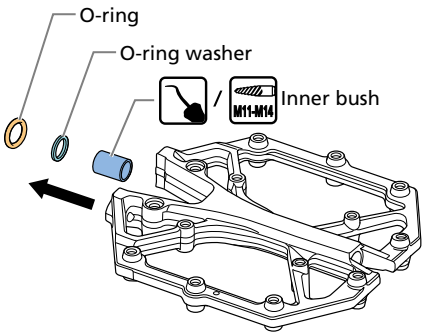

8. **Remove the washers and coiled wave spring.**

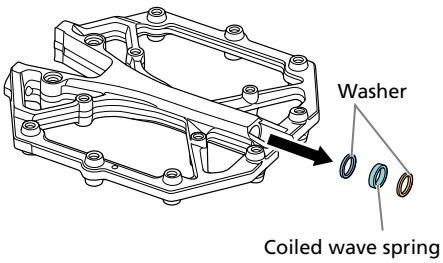

9. **Take out the outer bush.**

   Push it out from the crank axle side with a pin or similar tool (Ø7.5 mm).

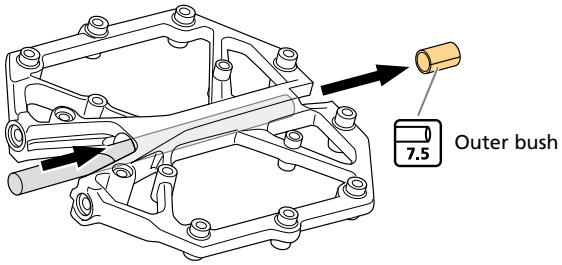

10. **Remove old grease from the axle hole, and apply a thin film of new grease (Premium Grease (Y04110000)) to the outer bush.**

> **TECH TIPS**
>
> - Apply grease to the extent that it does not flow out when the outer bush is set into the axle unit (approximately 0.5 g).

11. **Insert the new outer bush.**

    Insert it with a pin or similar tool (Ø7.5 mm).

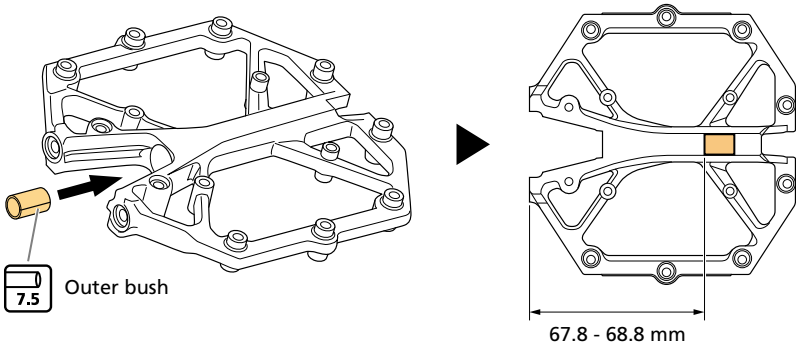

12. **Remove old grease from the axle unit, and apply a thin film of new grease (Premium Grease (Y04110000)) to the inner bush.**

> **TECH TIPS**
>
> - Apply grease to the extent that it does not flow out when the inner bush is set into the axle unit (approximately 0.5 g).

- When the axle stopper has been removed from the axle unit, apply sufficient grease to the area indicated in the figure before placing the axle stopper in its original position.

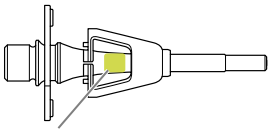

Grease number: Premium Grease (Y04110000)

13. Install the O-ring, O-ring washer, and new inner bush onto the axle unit.

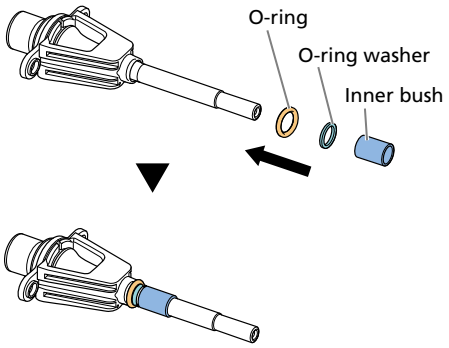

14. Insert the axle unit into the pedal body and tighten the backup plate fixing screws.

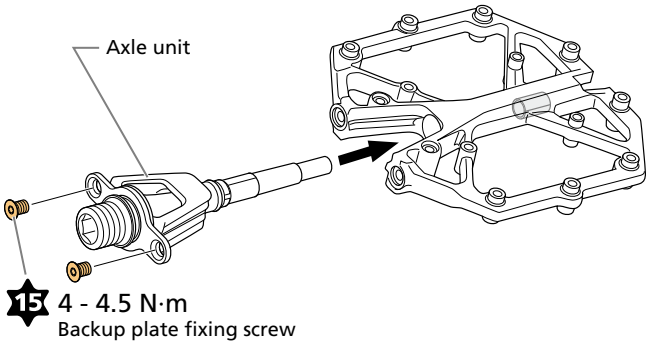

15. Install the washers and coiled wave spring.

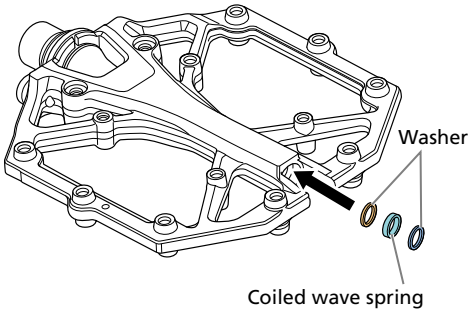

16. While securing the axle unit to stop it from turning, install the axle screw.

The right pedal has an axle screw with a left-hand thread, and the left pedal has an axle screw with a right-hand thread.

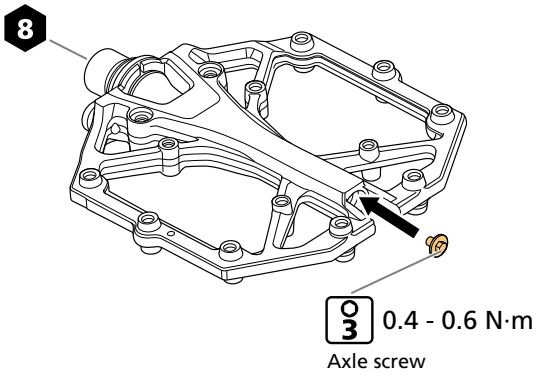

NOTICE

- Pay attention to the difference between the left and right axle screws.

For right pedal	For left pedal
 Without notch	 With notch

17. Install the O-ring.

Install the O-ring into the groove correctly with a hexagon wrench or a similar tool.

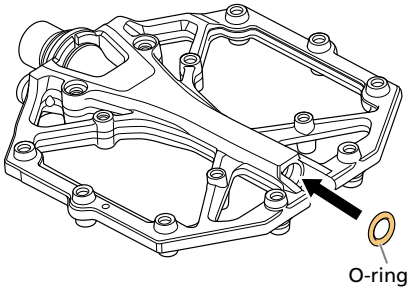

18. Apply a small amount of grease to the end plate and fit it into the end cap.

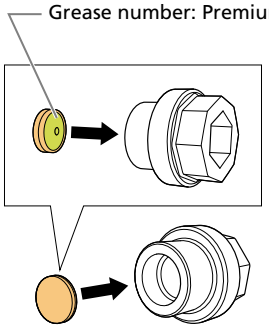

NOTICE

- Note the direction when fitting the end plate.

19. Install the end cap, then tighten it until the axle unit stops turning.

After tightening the end cap, adjust it so that a side of its head is parallel to the pedal body.

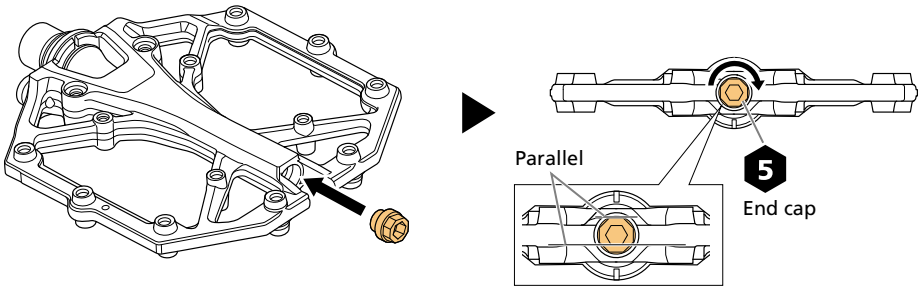

NOTICE

- The end cap should only be hand-tight. Do not overtighten the end cap.

20. Loosen the end cap 90°.

This position will serve as the standard for adjusting the rotation of the pedal.

Adjust the rotation by tightening and loosening the end cap by 45° if the pedals do not rotate smoothly, or if rotation is loose.

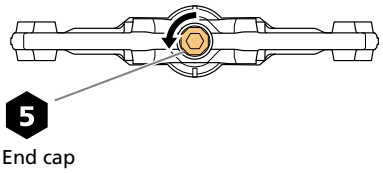

NOTICE

- After adjusting the end cap, make sure that a side of its head is parallel to the pedal body.
  If it is not parallel, the end cap may become loose and it may cause excess play.

21. Install all the pins to the platform and secure them to the pedal body.

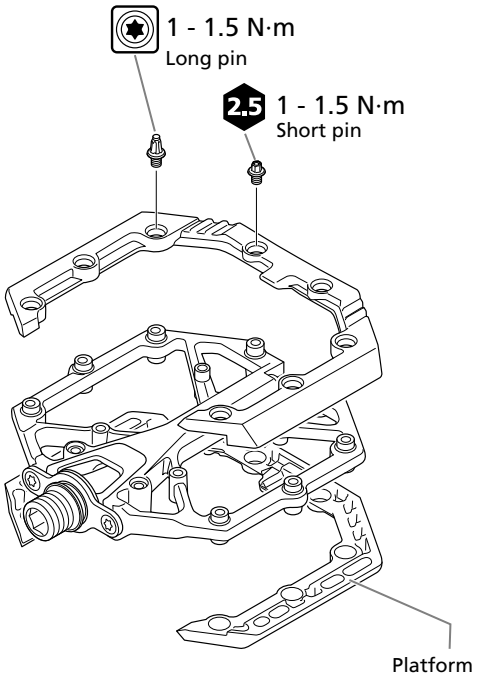
1 - 1.5 N·m
Long pin
2.5
1 - 1.5 N·m
Short pin
Platform

Installing / removing the reflectors

1. Install the reflectors as shown in the figures.

PD-M8240 / PD-G8040
Reflector: SM-PD70

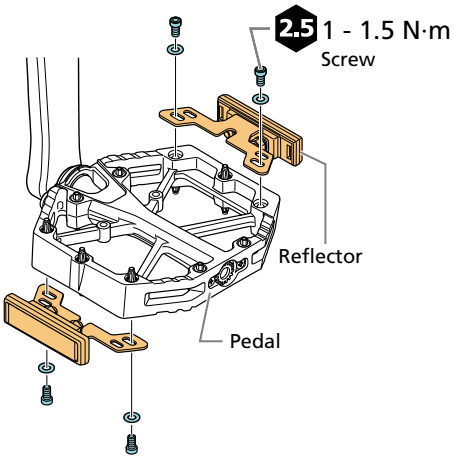

PD-M8140
Reflector: SM-PD67

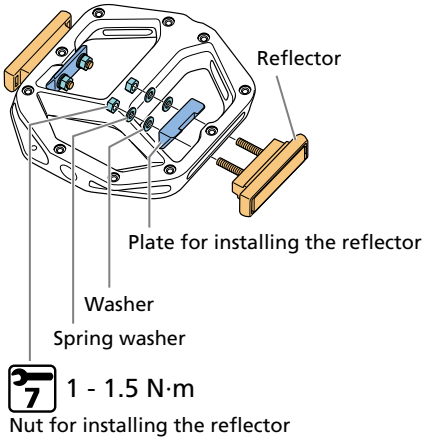

SHIMANO

SHIMANO NORTH AMERICA BICYCLE, INC.
One Holland, Irvine, California 92618, U.S.A. Phone: +1-949-951-5003

SHIMANO EUROPE B.V.
High Tech Campus 92, 5656 AG Eindhoven, The Netherlands Phone: +31-402-612222
Only EU General Contact : contactshimano@shimano-eu.com

SHIMANO INC.
3-77 Oimatsu-cho, Sakai-ku, Sakai City, Osaka 590-8577, Japan

Please note: specifications are subject to change for improvement without notice. (English)
© Nov. 2025 by SHIMANO INC. ITP