Dealer's Manual

ROAD	GRAVEL	MTB
E-BIKE	LIFESTYLE	GENERAL

Hydraulic Disc Brake (SHIMANO Low Viscosity Oil)

XTR

BR-M9200
BR-M9220
BL-M9200
BL-M9220

SHIMANO

BR-MT805

Contents

IMPORTANT NOTICE 4

TO ENSURE SAFETY 5

List of tools to be used 9

Installation / removal 10

Installing the brake lever 10

Installing the rotor 12

Installing the brake caliper (post mount type) 13

Installing the brake caliper (international-standard mount type) 16

Installing the brake caliper (flat mount type) 20

- Installing the pads 20
- Installing to the frame 21

Installing the brake hose 27

- Overview of the easy hose joint system 27
- Checking the length of the hose 27
- Cutting the hose 28
- Connecting the hose 31

Adjustment 35

Adjusting the free stroke 35

Adjusting the reach 36

Maintenance 37

Replacing the pads 37

Replacing SHIMANO low viscosity oil 40

Discharging SHIMANO low viscosity oil 41

Adding SHIMANO low viscosity oil and bleeding air (BR-M9200) 45

Adding SHIMANO low viscosity oil and bleeding air (BR-M9220 / BR-MT805) 53

Replacing the brake hose 61

- Checking the hose length and cutting the hose 61
- Assembly to the brake lever 61
- Caliper side 63

Caliper piston maintenance 65

Replacing the diaphragm 68
Replacing the lever blade (BL-M9200) 72
Replacing the lever blade / lever blade fixing spring (BL-M9220) 75
Replacing the cover (BL-M9220) 79
Designated small parts for magnesium components 81

IMPORTANT NOTICE

- **This dealer's manual is intended primarily for use by professional bicycle mechanics.**

  Users who are not professionally trained for bicycle assembly should not attempt to install the components themselves using the dealer's manuals.

  If any part of the information on the manual is unclear to you, do not proceed with the installation. Instead, contact your place of purchase or a distributor for assistance.
- Make sure to read all manuals included with each product.
- Do not disassemble or modify the product other than as stated in the information contained in this dealer's manual.
- All manuals and technical documents are accessible online at https://si.shimano.com .
- For consumers who do not have easy access to the internet, please contact a SHIMANO distributor or any of the SHIMANO offices to obtain a hardcopy of the user's manual.
- Please observe the appropriate rules and regulations of the country, state or region in which you conduct your business as a dealer.

For safety, be sure to read this dealer's manual thoroughly before use, and follow it for correct use.

The following instructions must be observed at all times in order to prevent personal injury and physical damage to equipment and surroundings.

The instructions are classified according to the degree of danger or damage which may occur if the product is used incorrectly.

DANGER	Failure to follow the instructions will result in death or serious injury.
WARNING	Failure to follow the instructions could result in death or serious injury.
CAUTION	Failure to follow the instructions could cause personal injury or physical damage to equipment and surroundings.

TO ENSURE SAFETY

⚠ WARNING

- **Be sure to follow the instructions provided in the manuals when installing the product.**

  Only use SHIMANO genuine parts. If a component or replacement part is incorrectly assembled or adjusted, it can lead to component failure and cause the rider to lose control and crash.
- Wear approved eye protection while performing maintenance tasks such as replacing components.

Be sure to also inform users of the following:

- Because each bicycle may handle slightly differently depending on the model, be sure to learn the proper braking technique (including brake lever pressure and bicycle control characteristics) and operation of your bicycle. Improper use of your bicycle's brake system may result in a loss of control, which could lead to serious injury due to a fall or collision.
- Riders must become accustomed to the higher performance of this brake before riding the bicycle. The 220 mm, 203 mm, and 180 mm rotors provide a higher braking force than the 160 mm rotors. If you ride the bicycle without becoming sufficiently familiar with the braking characteristics, braking may cause you to fall off the bicycle, potentially causing serious injury or a fatal accident.
- Keep your fingers away from the rotating rotor. The rotor is sharp enough to inflict severe injury to your fingers if caught.

- Do not touch the calipers or rotor while riding or immediately after dismounting from the bicycle. The calipers and rotor will become hot when the brakes are operated, so you may get burned if you touch them.
- Do not allow any oil or grease to get onto the rotor or pads. Riding the bicycle with oil or grease on the rotor or pads may prevent the brakes from operating and result in serious injury due to a fall or collision.
- Check the thickness of the pads and do not use them if they have a thickness of 0.5 mm or less. Doing so may prevent the brakes from operating and result in serious injury due to a fall or collision.

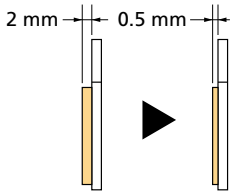

- Do not use the rotor if it is cracked or deformed. The rotor may break, and result in serious injury due to a fall or collision.
- Do not use the rotor if its thickness is 1.5 mm or less. Also do not use it if the aluminum surface becomes visible. The rotor may break, and result in serious injury due to a fall or collision.
- Do not continuously apply the brakes. Doing so may cause a sudden increase in the brake lever stroke, preventing the brakes from operating and resulting in serious injury due to a fall or collision.
- Check the information on the supported models for each oil type , and use the correct oil for the product. Failure to do so may prevent the brakes from operating and result in serious injury.
- Do not mix SHIMANO hydraulic mineral oil with SHIMANO low viscosity oil. Failure to do so may prevent the brakes from operating and result in serious injury.

- Do not use the brakes with fluid leaking. Doing so may prevent the brakes from operating and result in serious injury due to a fall or collision.
- Do not apply the front brake too strongly. If you do so, the front wheel may lock and the bicycle may fall forward, and serious injury may result.
- Because the required braking distance will be longer during wet weather, reduce your speed and apply the brakes early and gently. Failure to do so may result in serious injury due to a fall or collision.
- A wet road surface may cause tires to lose traction; therefore, to avoid this, reduce your speed and apply the brakes early and gently. If the tires lose traction, it may result in serious injury due to a fall or collision.
- If the quick release lever is on the same side as the rotor, confirm that it does not interfere with the rotor. Otherwise, the bicycle may fall forward, and serious injury may result.

For installation to the bicycle and maintenance

- Do not use oil other than SHIMANO low viscosity oil. Doing so may prevent the brakes from operating and result in serious injury due to a fall or collision.
- Use only mineral oil from a container that has been stored in a clean and sealed state. Doing otherwise may prevent the brakes from operating and result in serious injury due to a fall or collision.
- Do not let water or air bubbles get into the brake system. Doing so may prevent the brakes from operating and result in serious injury due to a fall or collision.
- Do not use with a tandem bicycle. Doing so may prevent the brakes from operating and result in serious injury due to a fall or collision.
- When installing the brake caliper using screw fixing pins, be sure to use mounting screws of the appropriate length. If not, the screw fixing pins may not be securely fastened, and the screws may fall out.

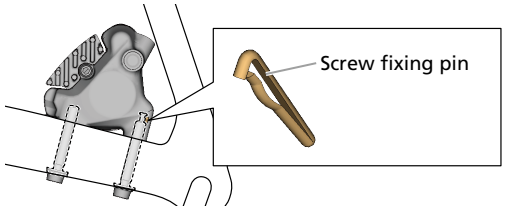

■ Brake hose

- Refer to the table below, and do not use an incorrect connector insert. Doing so may prevent the brakes from operating and result in serious injury due to a fall or collision.

Brake hose	Connector insert	
	Length	Color
SM-BH90	11.2 mm	Silver
SM-BH59	13.2 mm	Gold

- Do not reuse the olive piece or the connector insert when reinstalling. Doing so may prevent the brakes from operating and result in serious injury due to a fall or collision.

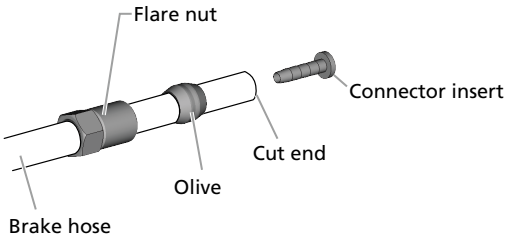

- Cut the brake hose so that the cut end is perpendicular to the length of the hose. If the brake hose is cut at an angle, fluid leaks may result. Fluid leaks may prevent the brakes from operating and result in serious injury due to a fall or collision.

⚠ CAUTION

Be sure to also inform users of the following:

■ Cautions on SHIMANO low viscosity oil

- Use appropriate eye protection when handling, and avoid contact with eyes. In the event of eye contact, flush with fresh water and seek medical assistance immediately. Contact with eyes may result in irritation.
- Use gloves when handling. In the event of skin contact, wash well with soapy water. Contact with skin may cause a rash and discomfort.
- When using SHIMANO low viscosity oil, cover your nose and mouth with a respirator type mask and ensure that the area is well-ventilated. Inhalation of oil mist or vapors emitted from SHIMANO low viscosity oil may cause nausea.
- If oil mist or vapor emitted from SHIMANO low viscosity oil is inhaled, go immediately to an area with fresh air. Cover up with a blanket. Stay warm and stable and seek professional medical advice.

■ Bed-in period

- Disc brakes have a bed-in period, and the braking force will gradually increase as the bed-in period progresses. You may lose control of the bicycle, which can result in serious injury due to a fall or collision.

  (The same thing will happen when the pads or rotor are replaced.)

For installation to the bicycle and maintenance

- When using the SHIMANO original tool (TL-FC36, etc.) to remove and install the rotor lock ring, wear gloves and be careful not to touch the outer edges of the rotor with your hands. Failure to do so may result in cuts to your hands.

■ Handling SHIMANO low viscosity oil

- Do not drink. May cause vomiting or diarrhea.
- Keep out of reach of children.
- Do not cut, let near heat, weld or pressurize the SHIMANO low viscosity oil container. Doing so may cause an explosion or fire.
- Disposal of used oil: Follow local county and/or state codes for disposal. Use caution when preparing the oil for disposal.
- Directions: Keep the container sealed to prevent foreign objects and moisture from getting inside, and store it in a cool, dark area away from direct sunlight or heat. Keep from heat or flame.

■ Brake hose

- When cutting the brake hose, handle the knife carefully so as not to cause injury.
- Be careful to avoid injury from the olive.

■ When using TL-BH62

- When cutting the brake hose, handle the knife carefully so as not to cause injury.
- Be careful to avoid pinching your fingers between the lever and the tool during operations.
- When replacing the knife blade, handle the knife carefully so as not to cause injury.

- If SHIMANO low viscosity oil adheres to the brake hose, use isopropyl alcohol to clean the hose and remove the oil.
- Keep the tool and the blades out of reach of children.

NOTICE

Be sure to also inform users of the following:

- When the bicycle wheel has been removed, it is recommended that pad spacers are installed. Do not depress the brake lever while the wheel is removed. If the brake lever is depressed without the pad spacers installed, the pistons will protrude further than normal. If that happens, consult a place of purchase.
- Use soapy water and a dry cloth when cleaning and carrying out maintenance of the brake system. Do not use commercially available brake cleaners or silencing agents. Such substances can cause damage to parts such as seals.
- In the case of carbon levers, wash them with a soft cloth using a neutral detergent. Otherwise, the material may be damaged and lose strength.
- Avoid leaving the carbon levers in areas of high temperature. Also keep them well away from fire.
- Products are not guaranteed against natural wear and deterioration from normal use and aging.
- For maximum performance we highly recommend SHIMANO lubricants and maintenance products.

For installation to the bicycle and maintenance

- The 220 mm, 203 mm, and 180 mm rotors have a larger diameter than the 160 mm rotor for cross-country bicycles, and so the warping of these rotors is greater. As a result, they may interfere with the performance of the pads.
- If the brake caliper mounting boss and the dropout are not parallel, the rotor and caliper may touch.
- When the bicycle wheel has been removed, it is recommended that pad spacers are installed. The pad spacers will prevent the piston from coming out if the brake lever is depressed while the wheel is removed.
- If the brake lever is depressed without the pad spacers installed, the pistons will protrude further than normal. Use a flat-shaped tool to push back the pads, while being careful not to damage the surface of the pads. (If the pads are not installed, use a flat-shaped tool to push the pistons straight back in, while being careful not to damage them.) When pushing back the pads or pistons, do so with an oil funnel attached to the brake lever. Otherwise, the diaphragm of the brake lever may be damaged by the oil pressure.
- For cleaning brake hoses exposed to SHIMANO low viscosity oil, or cleaning and maintaining tools, use isopropyl alcohol or a dry cloth. Do not use commercially available brake cleaners. Doing so may cause damage to plastic parts.
- Do not remove the pistons when cleaning the calipers.
- If the rotor is worn, cracked or warped, it should be replaced.
- BL-M9200 is a magnesium component. Corrosion starts when these components come into contact with parts made of other types of metals, such as steel hardware. In the contact area, water residue, sweat, rain and other moisture particles may create a potential reaction. This forms an electrochemical cell, resulting in an electrochemical reaction. To prevent this problem, each part is treated with a special-purpose surface treatment. Use appropriate parts to prevent the progression of corrosion. For details, refer to " Designated small parts for magnesium components " in "Maintenance."

The actual product may differ from the illustration because this manual is intended mainly to explain the procedures for using the product.

List of tools to be used

The following tools are needed for installation/removal, adjustment, and maintenance purposes.

Tool	
2	2 mm hexagon wrench
2.5	2.5 mm hexagon wrench
3	3 mm hexagon wrench
4	4 mm hexagon wrench
5	5 mm hexagon wrench
8	8 mm spanner
7	7 mm box wrench
	Slotted screwdriver (nominal size 0.8 x 4 recommended)
TL-BH62	TL-BH62
TL-BR001	TL-BR001 (syringe and tube)
TL-BR003	TL-BR003 (oil funnel and oil stopper)
	Micrometer

Installation / removal

Installing the brake lever

For the installation method when installing with an I-SPEC EV type shift switch, refer to the dealer's manual of the shift switch to use.

When installing parts onto a carbon frame/handlebar, confirm the recommended tightening torque with the carbon frame or handlebar manufacturer. This will prevent damage to the frame/handlebar due to over-torquing or inadequate securing of the components.

1. **Open the clamp band of the brake lever.**
   (1) Loosen the mounting screw.
   (2) Press the recessed area of the clamp band with a tool such as a 2 mm hexagon wrench to disengage the safety latch.

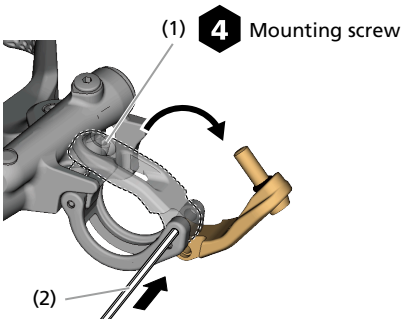

2. **Push an O-ring against the clamp band, as shown in the figure.**

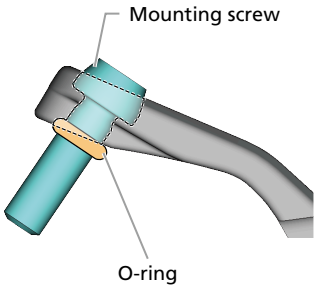

3. **Install the brake lever to the handlebar.**
   Secure it using the mounting screw.

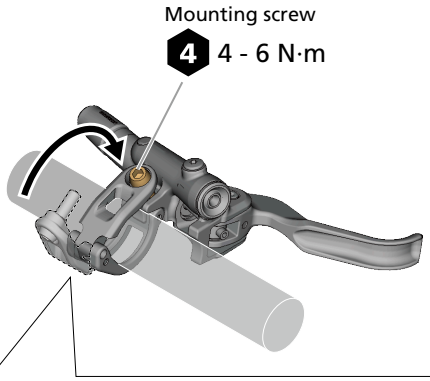

When installing the brake lever in combination with a standard type shift switch, install the brake lever so that the position of the shift switch band is within the range shown in the figure. After the shift switch is installed, install the brake lever while checking its position.

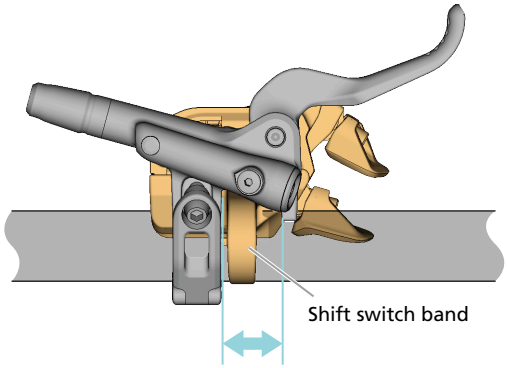

Installing the rotor

Refer to the Dealer's Manual for the Wheels to install and remove the rotor.

Installing the brake caliper (post mount type)

1. **Install the wheel with an attached rotor onto the frame.**
2. **Remove the bleed spacer.**
   (1) Remove the retaining clip.
   (2) Remove the pad axle.
   (3) Remove the bleed spacer.

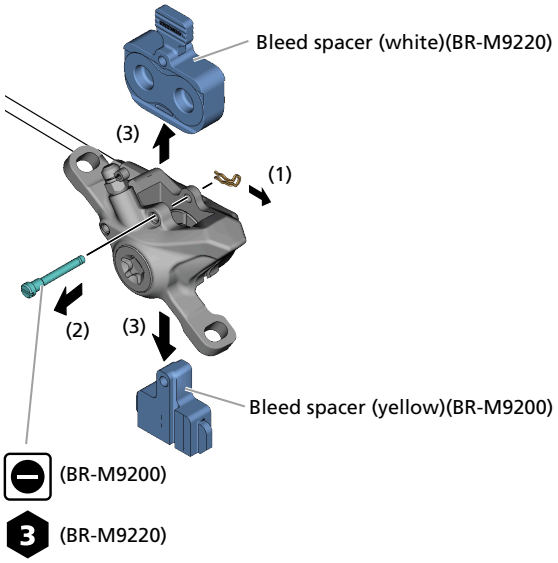

3. **Set the pad presser spring in the pads.**
   Set the pads as shown in the figure.

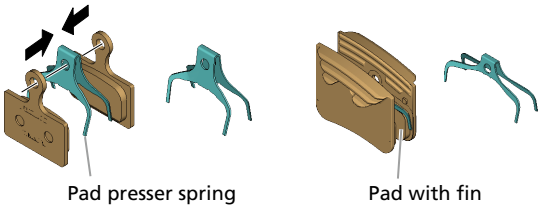

4. **Install the pads.**
   (1) Set the pads in the caliper.
   (2) Install the pad axle.
   (3) Install the retaining clip.
   (4) Install the pad spacers.

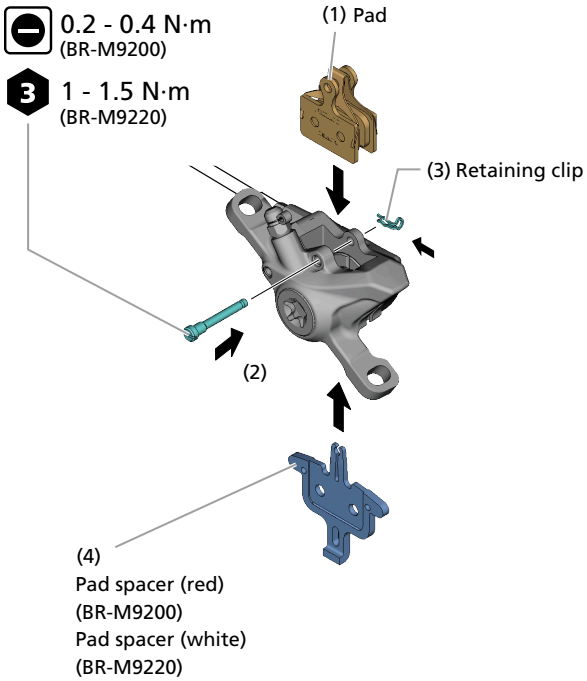

NOTICE

- Some pads have left (L) and right (R) markings. Take note of this when setting them in the caliper.

5. **Depress the brake lever a few times and make sure that the lever operation becomes stiff.**
6. **Remove the pad spacers.**
7. **Temporarily install the caliper on the frame without fully tightening the mounting screws so that the caliper can still move horizontally.**

   If it is necessary to install a mount adapter, temporarily install the adapter after setting it on the caliper. Set the adapter so that the mark is facing up.

   Without mount adapter

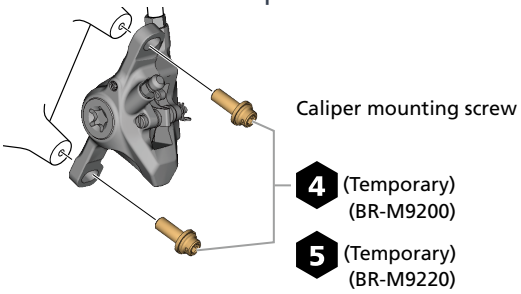

   With mount adapter

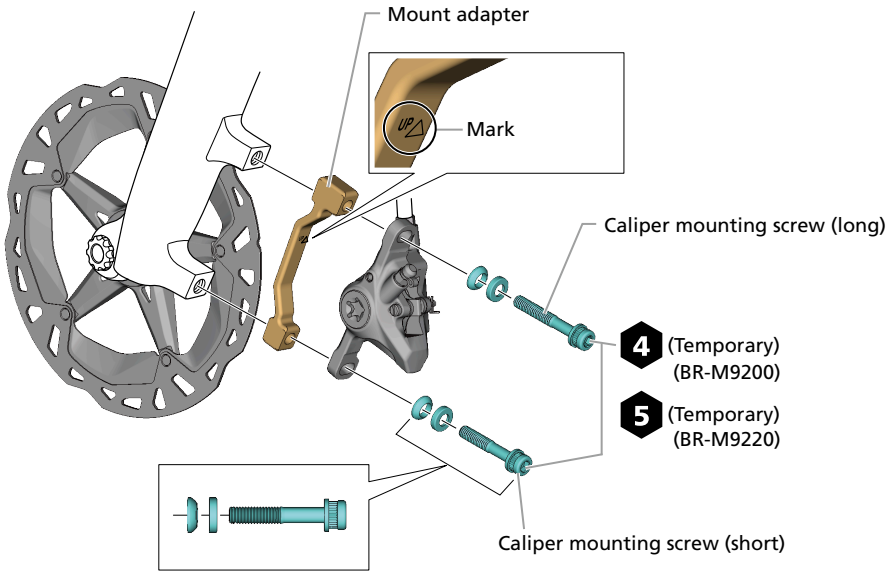

8. **Depress the brake lever so that the rotor is held between the pads, then tighten the caliper mounting screws.**

   If the brake hose is not already installed in the caliper, install the brake hose then perform the step.

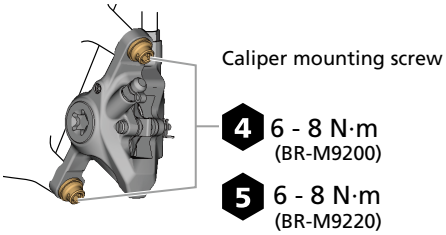

9. **Secure the caliper mounting screws.**

   In order to prevent the screw from loosening, install a snap ring on the head of the screw.

   If there is a lock wire hole through the head of the screw, use lock wire to secure it.

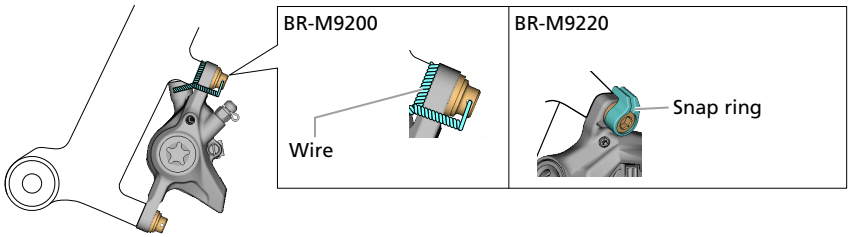

NOTICE

- Use the supplied snap ring for the BR-M9220. Other models of snap rings cannot be installed.

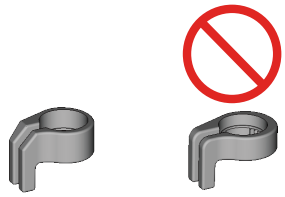

Installing the brake caliper (international-standard mount type)

NOTICE

- For international-standard mounts (ISO mounts), a dedicated adapter is required.

1. **Install the wheel with an attached rotor onto the frame.**
2. **Remove the bleed spacer.**
   (1) Remove the retaining clip.
   (2) Remove the pad axle.
   (3) Remove the bleed spacer.

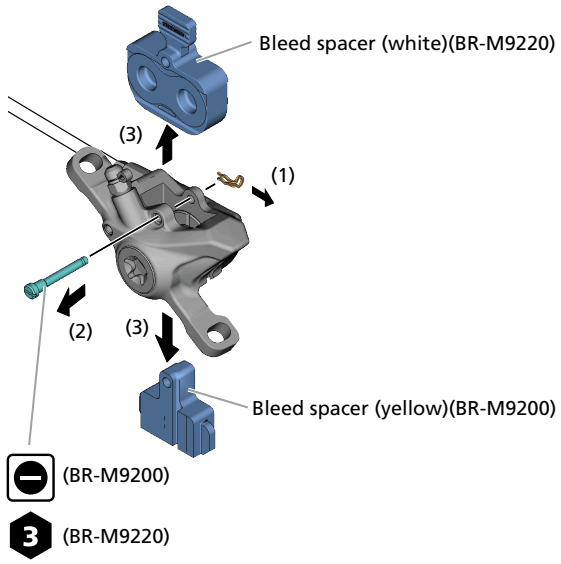

3. **Set the pad presser spring in the pads.**
   Set the pads as shown in the figure.

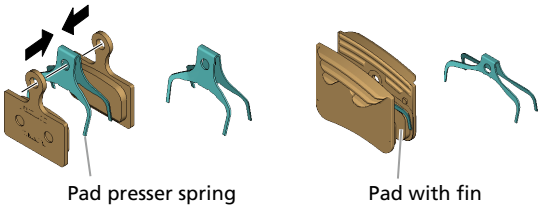

4. **Install the pads.**
   (1) Set the pads in the caliper.
   (2) Install the pad axle.
   (3) Install the retaining clip.
   (4) Install the pad spacers.

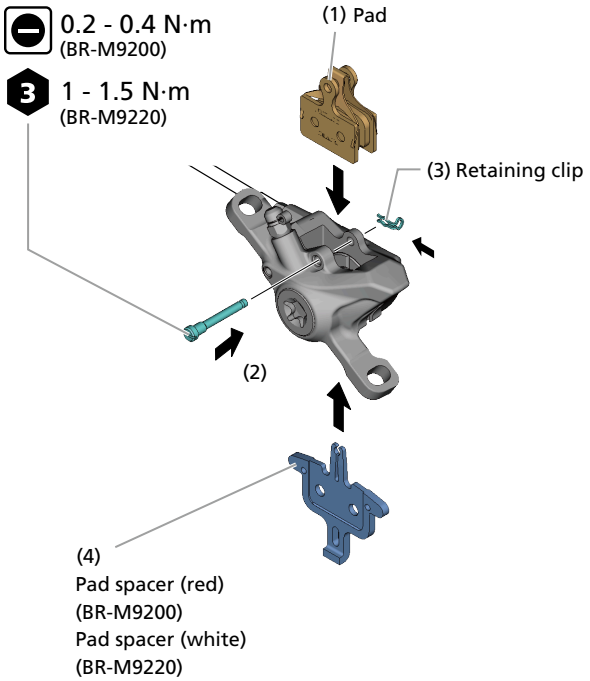

NOTICE

- Some pads have left (L) and right (R) markings. Take note of this when setting them in the caliper.

5. **Depress the brake lever a few times and make sure that the lever operation becomes stiff.**
6. **Remove the pad spacers.**
7. **Temporarily install the caliper on the adapter, then install it onto the frame.**

   Tighten with the adapter mounting screws. Perform temporary installation until the caliper can only move a slight amount left and right.

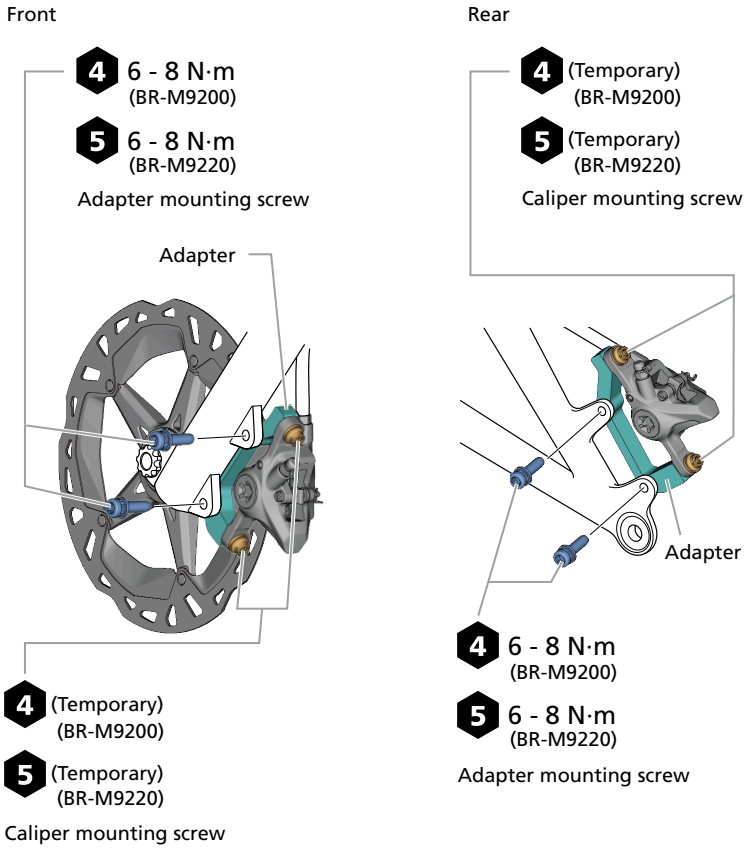

8. Depress the brake lever so that the rotor is held between the pads, then tighten the caliper mounting screws.

If the brake hose is not already installed in the caliper, install the brake hose then perform the step.

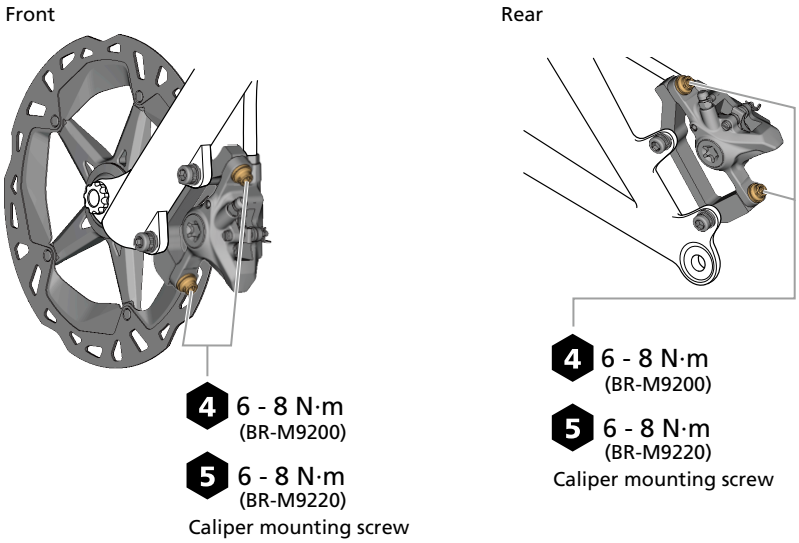

9. Secure the caliper mounting screws.

In order to prevent the screws from loosening, secure the caliper mounting screws and adapter mounting screws with snap rings or a wire.

* Install the snap rings or pass the wire through the holes in the heads of the mounting screws and twist as shown in the figure.

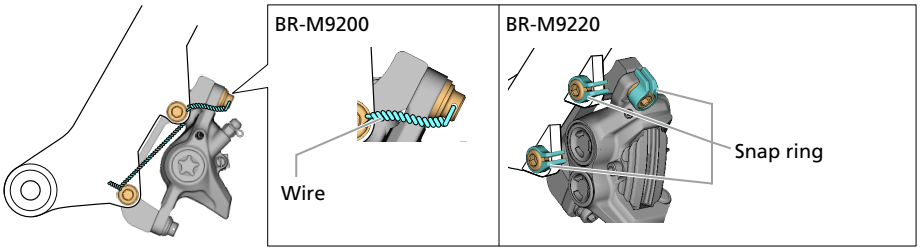

NOTICE

- Use the supplied snap ring for the BR-M9220. Other models of snap rings cannot be installed.

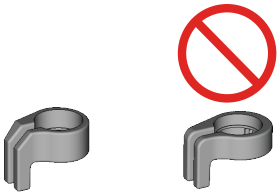

TECH TIPS

- If screw (1) loosens (turns counterclockwise), force is applied via the wire to turn screw (2) in the tightening direction (clockwise). However, screw (2) cannot turn any further in the tightening direction. Accordingly, this prevents screw (1) from turning in the loosening direction because it is also connected via the wire. If either screw begins to loosen, force will be applied to the other screw, thereby turning the loosened screw in the tightening direction. In other words, this system prevents the screws from loosening.

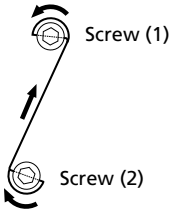

Installing the brake caliper (flat mount type)

Installing the pads

1. **Remove the bleed spacer (yellow).**
   (1) Remove the retaining clip.
   (2) Remove the pad axle.
   (3) Remove the bleed spacer (yellow).

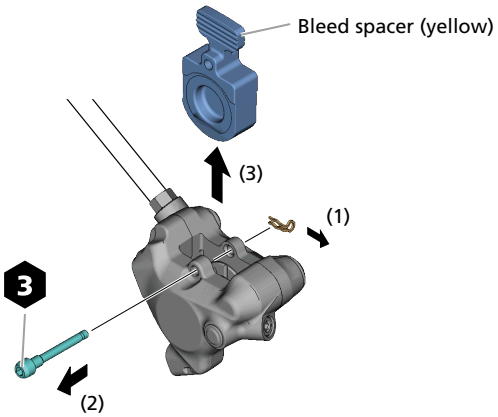

2. **Set the pad presser spring in the pads.**
   Set the pads as shown in the figure.

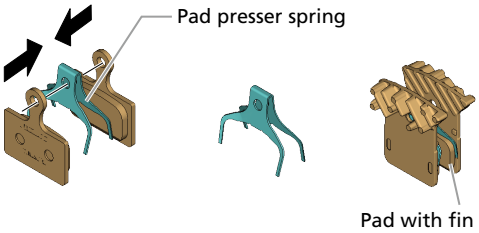

3. **Install the pads.**
   (1) Set the pads in the caliper.
   (2) Install the pad axle.
   (3) Install the retaining clip.
   (4) Install the pad spacer (red).

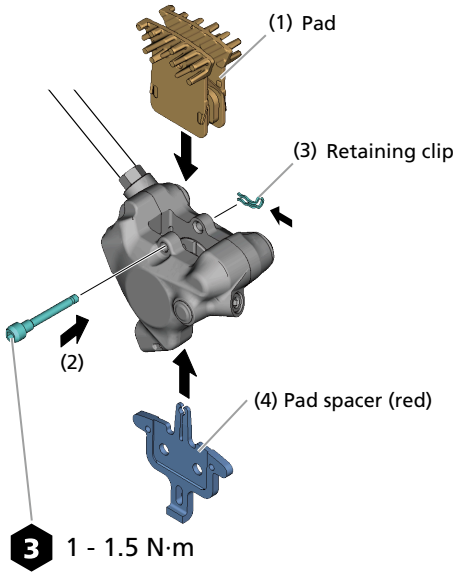

4. **Depress the brake lever a few times and make sure that the lever operation becomes stiff.**
5. **Remove the pad spacer (red).**

Installing to the frame

With the pads in place, install the caliper to the frame. The installation method differs according to the rotor used.

Install the wheel with an attached rotor onto the frame first.

NOTICE

- A dedicated mount bracket may be required, depending on the frame and rotor combination.

Rotor size	Frame mount type	
	Flat mount 140 / 160 rear	Flat mount 160 / 180 rear
Ø140 mm (SS)	Mount bracket not required	-
Ø160 mm (S)	SM-MA-R160 D/D	Mount bracket not required
Ø180 mm (M)	-	SM-MA-R160 D/D

For rear 140 mm rotor

When not using a mount bracket, follow this installation procedure.

1. **Insert the caliper mounting screws C/C2 into the frame mount area.**

   Make sure that the length of the protruding section of the caliper mounting screws C/C2 is the specified length.

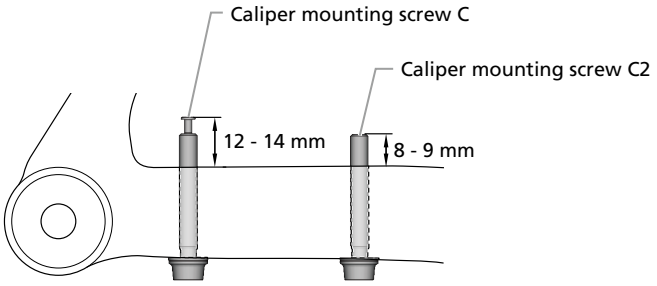

NOTICE

- When using a screw length selector:
  - Ensure the tip of caliper mounting screw C is within the range of dimension A.
  - Ensure the tip of caliper mounting screw C2 is within the range of dimension B.

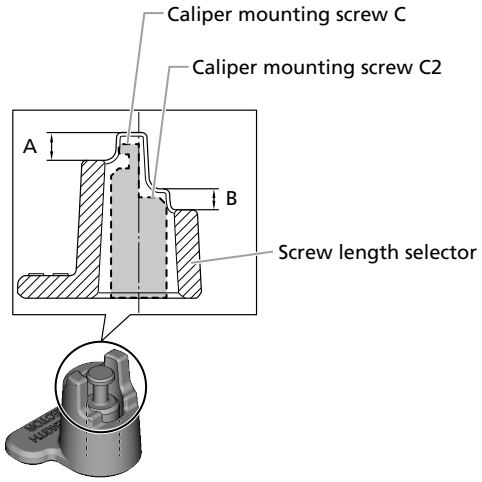

- The length of the caliper mounting screws C/C2 to use varies depending on the thickness of the frame. Use the caliper mounting screws C/C2 that are appropriate for the thickness of the frame.

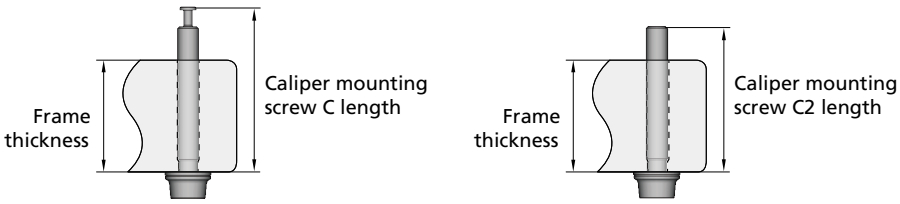

Frame thickness	Caliper mounting screw C length	Caliper mounting screw C2 length
10 mm	23 mm (Y8N208000)	19 mm (Y2J708000)
15 mm	28 mm (Y8N208050)	24 mm (Y2J708050)
20 mm	33 mm (Y8PU08010)	29 mm (Y2HW08010)
25 mm	38 mm (Y8PU08020)	34 mm (Y2HW08020)
30 mm	43 mm (Y8PU08030)	39 mm (Y2HW08030)
35 mm	48 mm (Y8N208040)	44 mm (Y2J708040)

2. **Temporarily install the brake caliper to the frame so that the brake caliper can still move horizontally.**

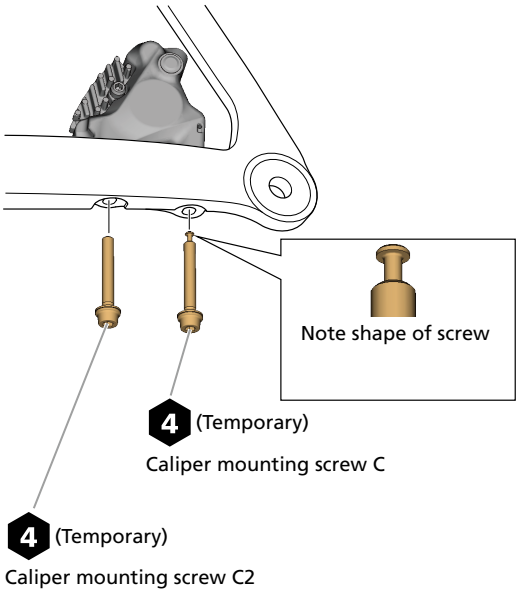

⚠ CAUTION

- Correctly install caliper mounting screw C. There are two types of caliper mounting screws, and only caliper mounting screw C can be retained using a screw fixing pin. Failing to install correctly may cause the caliper mounting screws to fall out or lead to insufficient force for holding the brake caliper.

3. **Depress the brake lever so that the rotor is held between the pads, then tighten caliper mounting screws C/C2.**

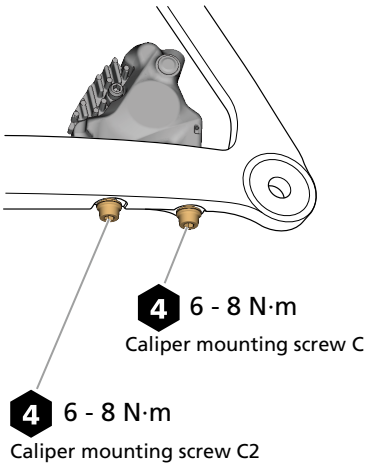

4. **Install the screw fixing pin.**

   Check that the screw fixing pin is fully inserted all the way to the back.

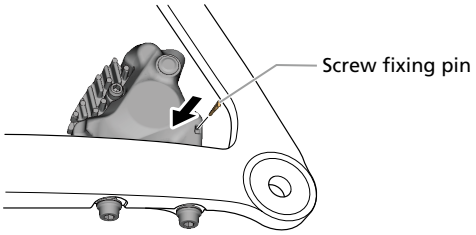

For rear 160 mm and rear 180 mm rotors

1. **Check the length of caliper mounting screws C/C2.**

   Refer to step 1 in “For a rear 140 mm rotor.”

2. **Attach the mount bracket to the brake caliper.**

   (1) Tighten it using caliper mounting screws B/B2.

   (2) Install the screw fixing pin.

   * Check that the screw fixing pin is fully inserted all the way to the back.

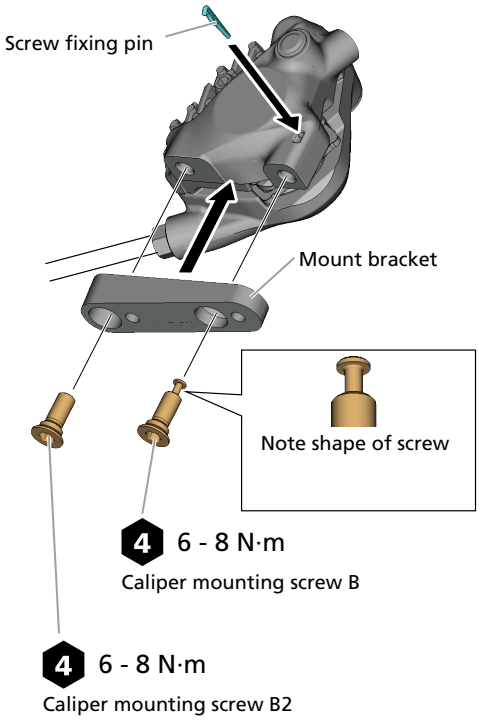

⚠ CAUTION

- Correctly install caliper mounting screw B. There are two types of caliper mounting screws, and only caliper mounting screw B can be retained using a screw fixing pin. Failing to install correctly may cause the caliper mounting screws to fall out or lead to insufficient force for holding the brake caliper.

NOTICE

- Pay attention to the marking on the mount bracket when attaching it.

3. **Temporarily install the mount bracket to the frame so that it can move left and right.**

Temporarily install it using caliper mounting screws C/C2 with an additional spacer under each screw head.

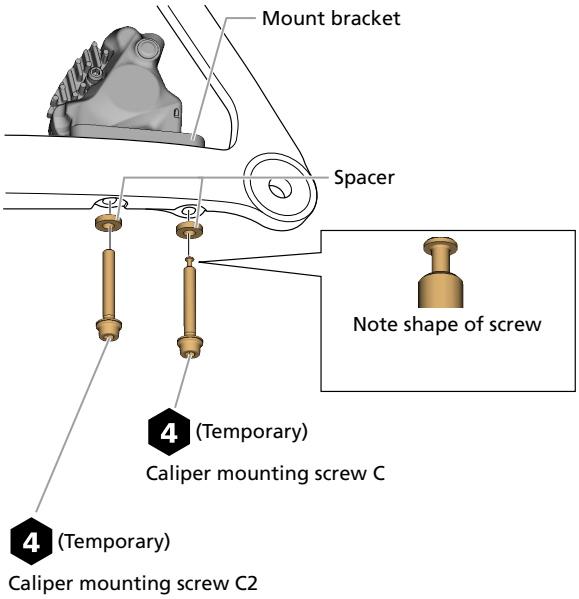

CAUTION

- Correctly install caliper mounting screw C. There are two types of caliper mounting screws, and only caliper mounting screw C can be retained using a screw fixing pin. Failing to install correctly may cause the caliper mounting screws to fall out or lead to insufficient force for holding the brake caliper.

4. **Depress the brake lever so that the rotor is held between the pads, then tighten caliper mounting screws C/C2.**

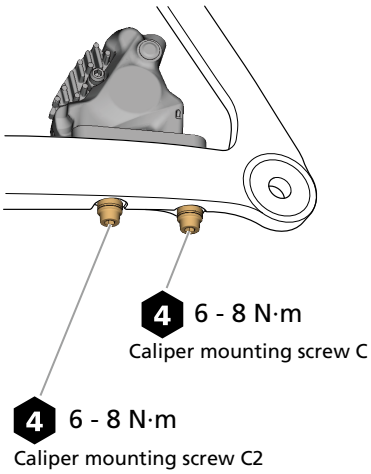

5. **Install the retaining clip.**

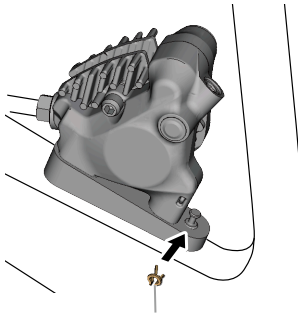
Retaining clip

Installing the brake hose

Overview of the easy hose joint system

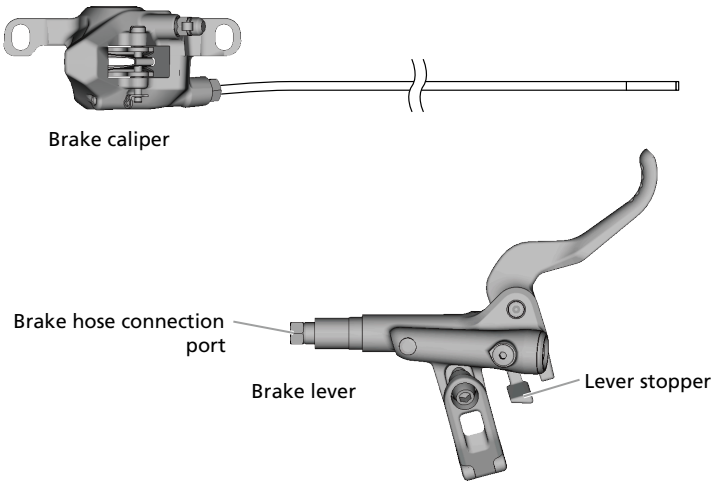

Checking the length of the hose

1. **Route the brake hose into the final installation position.**

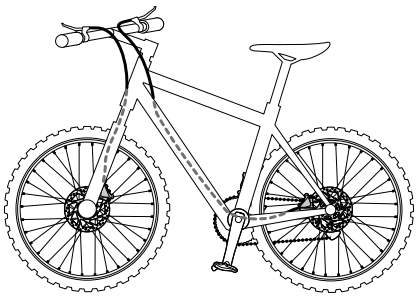

NOTICE

- This figure is only for explanatory purposes. For details on how to route the brake hoses, consult the manufacturer of the bicycle or refer to the bicycle's manual.

2. **Check the appropriate length of the brake hose.**

   Secure the brake lever in the position used when riding.

   (BL-M9200 cannot be secured on the handlebars unless the lever stopper is removed. Place the lever in the position assumed to be used when riding, then perform a check.)

   Check the mark on the brake hose with the edge of the brake lever flare nut.

   * If the hose is at the appropriate length, it is not necessary to cut the hose. Proceed to the " Connecting the hose " section in "Installing the brake hose."
   * If the hose needs to be shortened, proceed to " Cutting the hose " in "Installing the brake hose."
   * If the hose length is insufficient, replace with a hose that has an appropriate length. Proceed to " Replacing the brake hose ."

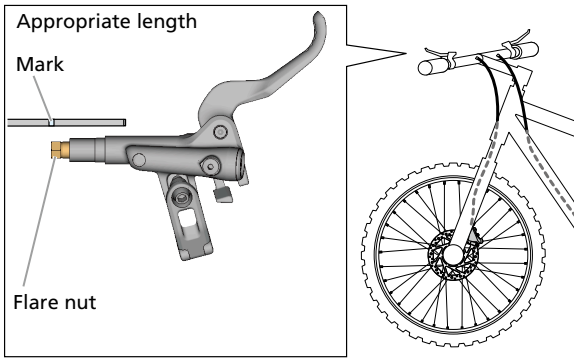

Cutting the hose

Use care when cutting the hose, as oil may leak when the hose is cut.

NOTICE

- Make sure to also refer to the manual for SHIMANO original tool TL-BH62.
- Do not move the lever indicated in the figure before disassembling SHIMANO original tool TL-BH62.

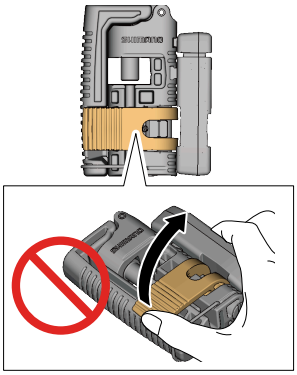

1. **Determine the appropriate length and add a witness mark on the brake hose.**

   Add the mark so it is aligned with the edge of the flare nut.

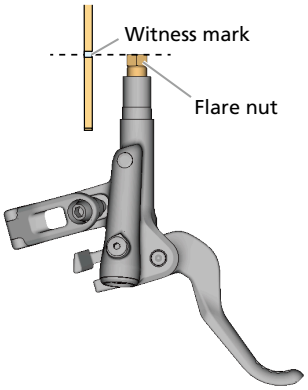

2. **Add a cut mark.**

   Add a cut mark 18 mm towards the end of the hose from the witness mark.

   * When not using an easy hose joint system, add a cut mark 11 mm towards the end of the hose from the witness mark.

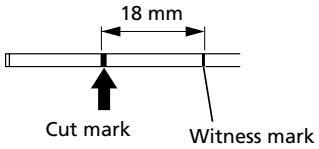

3. Prepare tool TL-BH62 for the cutting of the brake hose.

Disassemble the tool as shown in the figure.

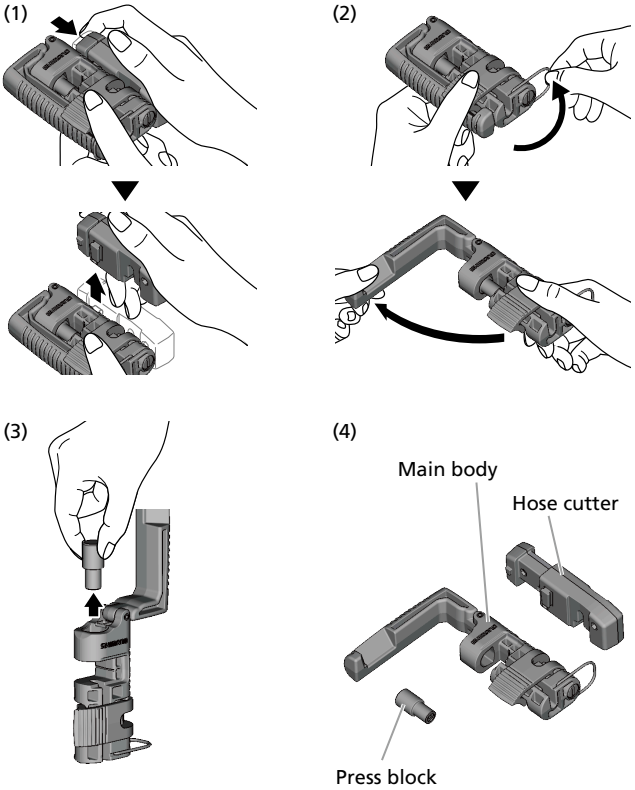

4. Insert the brake hose into the TL-BH62.

When placing the brake hose, make sure that the cut mark is parallel with the alignment groove in the tool.

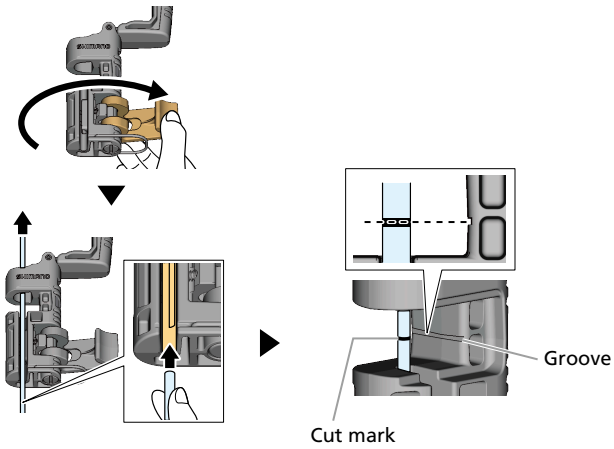

5. Check the cut location and secure the brake hose in place.

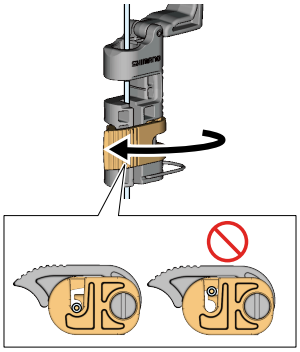

6. **Check that the hose is secure, then install the hose cutter.**

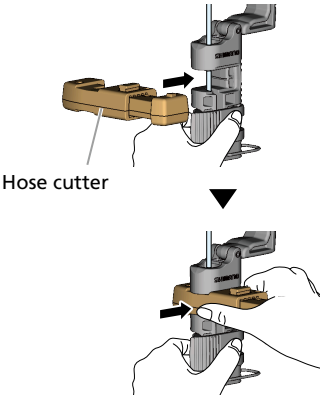

7. **Press the hose cutter as shown in the figure to cut the brake hose.**

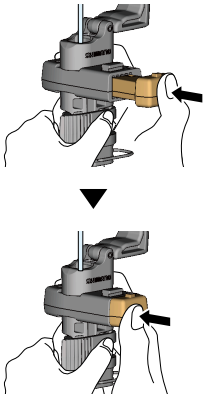

8. **Remove the hose cutter and check that the cut end is even.**

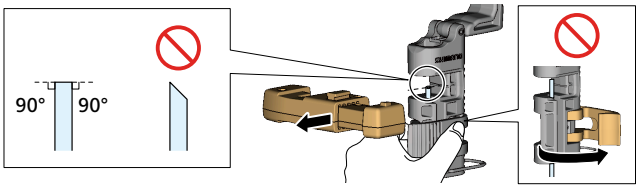

9. **Install the connector insert in the press block, then set the press block in the TL-BH62.**

   Make sure that the tip of the connector insert is correctly positioned inside the opening of the brake hose.

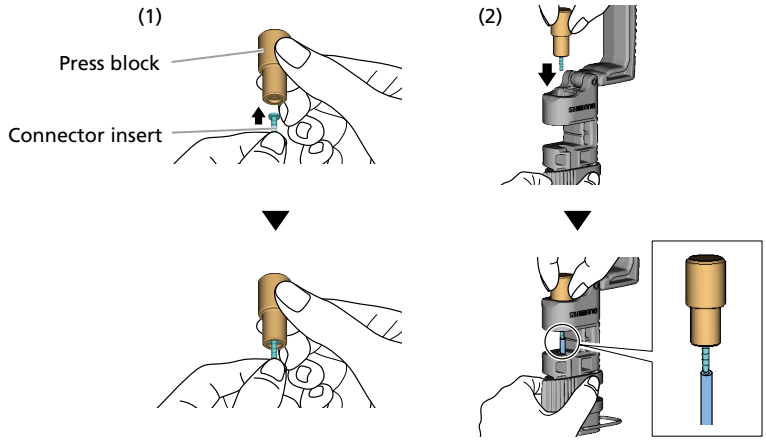

NOTICE

- When connecting with an easy hose joint system, a specific Connector Insert (SHIMANO CODE No.: Y8JA98020 / color: silver) must be used. Use of any connector insert other than the specified one may lead to fluid leaks and other malfunctions.

10. Depress the lever on the TL-BH62 to install the connector insert in the brake hose.

Check that the connector insert is installed correctly.

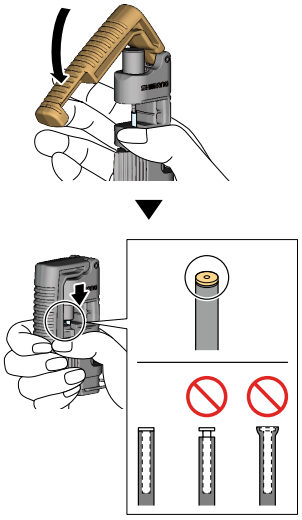

11. Remove the brake hose from the TL-BH62.

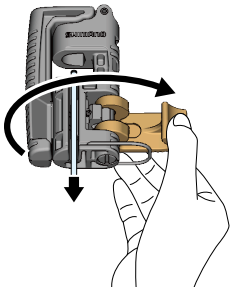

Connecting the hose

1. Pass the hose cover over the brake hose.

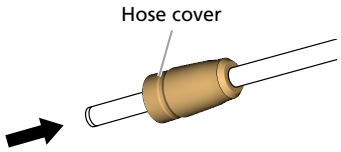

2. **Set the hose connection port of the brake lever so that it is facing upward.**

   Secure it by adjusting the angle of the handlebar, or other means.

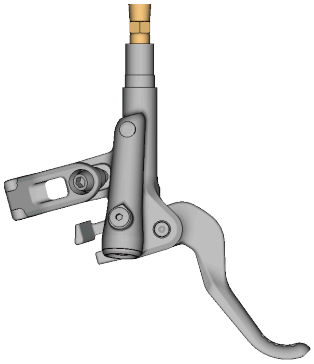

3. **Remove the seal plug.**

   Use a clean rag to keep oil from dripping off the seal plug.

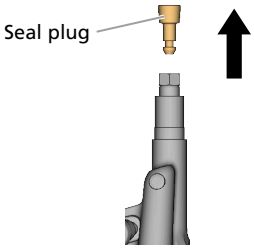

   For the BL-M9220, remove the plug holder before removing the seal plug. (The BL-M9200 has a lever stopper installed instead of a plug holder.)

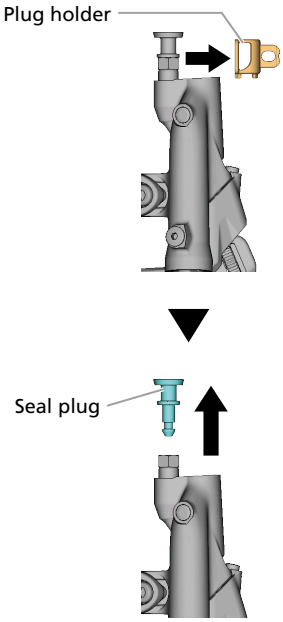

4. **Insert the brake hose into the brake hose connection port.**

   The lever comes with a pre-installed olive. When inserting the hose, ensure it does not snag on the olive.

   Insert the hose up to the witness mark on the outer hose casing.

Cover with a clean rag while conducting this procedure as some of the internal oil may leak.

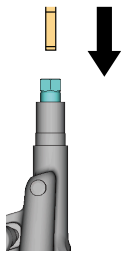

NOTICE

- If there is film over the tip of the brake hose, insert the brake hose into the brake hose connection port without puncturing the film.

5. **Tighten the flare nut.**

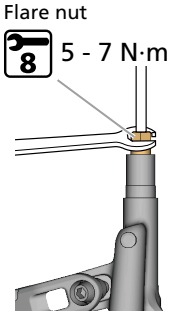

6. **Wipe off any residual oil and install the hose cover.**

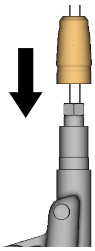

7. **Remove the lever stopper from the brake lever.**

   Pull the lever stopper out after removing the brake lever from the handlebar.

   Pull out the lever stopper by means of short back and forth movements while taking care not to depress the brake lever.

   * The BL-M9220 does not have a lever stopper.

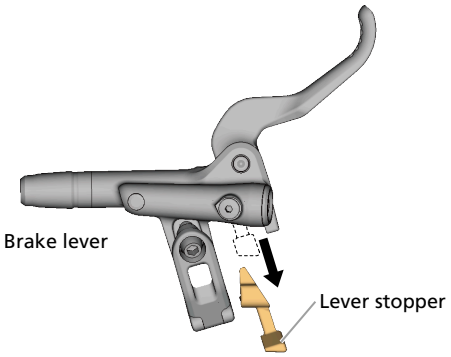

8. **Check that the pad spacer is installed in the caliper.**
9. **Operate the brake lever several times. Check that the pads grip the pad spacer and that the lever becomes stiff.**

   If the lever does not become stiff, refer to “Adding SHIMANO low viscosity oil and bleeding air” and bleed the air from the system.

   - Adding SHIMANO low viscosity oil and bleeding air (BR-M9200)
   - Adding SHIMANO low viscosity oil and bleeding air (BR-M9220 / BR-MT805)

Adjustment

Adjusting the free stroke

Adjust the range of travel of the brake lever until the pad and rotor come into contact. The free stroke adjustment moves only the initial position of the brake lever. If you want to move the pad engagement point relative to the handlebar, you must also perform a reach adjustment.

1. **Turn the free stroke adjustment screw to adjust the stroke.**

   Tightening the free stroke adjustment screw (clockwise) narrows the range of travel of the brake lever, while loosening the screw (counterclockwise) widens it.

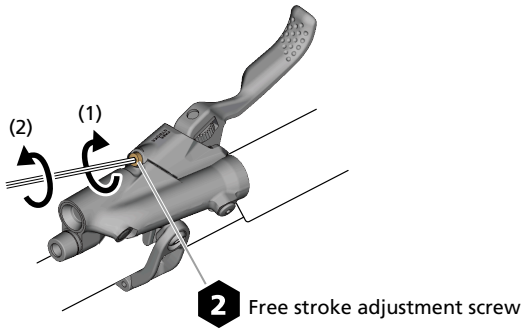

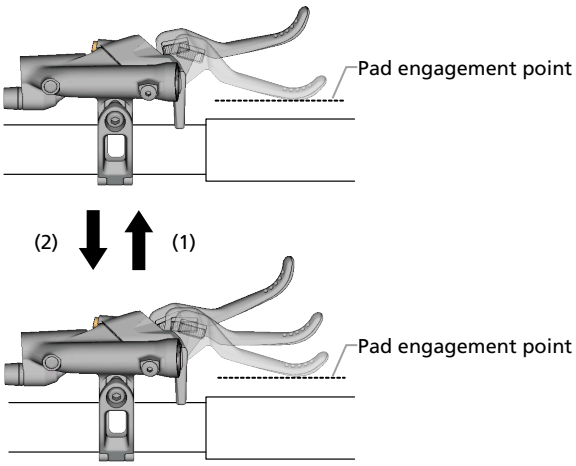

NOTICE

- Free stroke cannot be adjusted for the BL-M9200.

Adjusting the reach

1. **Turn the reach adjustment screw or reach adjustment dial to perform adjustment.**

   BL-M9200

   Tightening the reach adjustment screw (clockwise) widens the distance between the position of the brake lever and the handlebar, while loosening the screw (counterclockwise) narrows it.

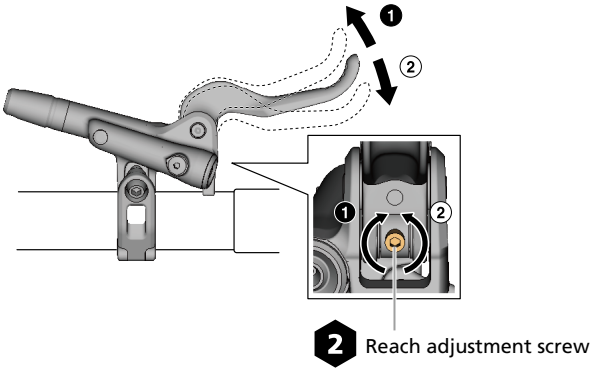

   BL-M9220

   Turning the reach adjustment dial counterclockwise widens the distance between the position of the brake lever and the handlebar, while turning the screw clockwise narrows it.

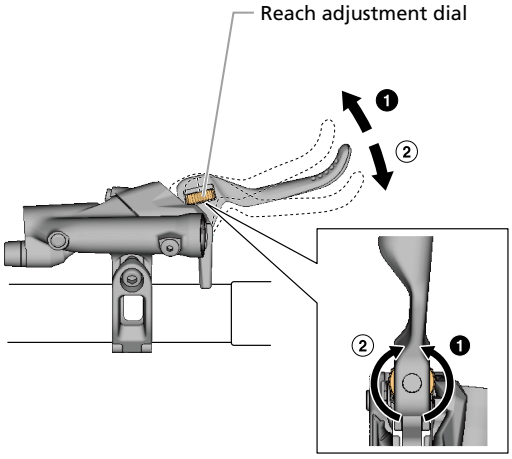

Maintenance

Replacing the pads

Replace the pads in the following circumstances:

- When the pads become contaminated due to oil, etc.
- When the thickness at the most worn-down part of the pad is 0.5 mm
- When the pad presser spring is interfering with the rotor

1. **Remove the wheel from the frame.**
2. **Remove the pads.**
   (1) Remove the retaining clip.
   (2) Remove the pad axle.
   (3) Remove the pads from the caliper.

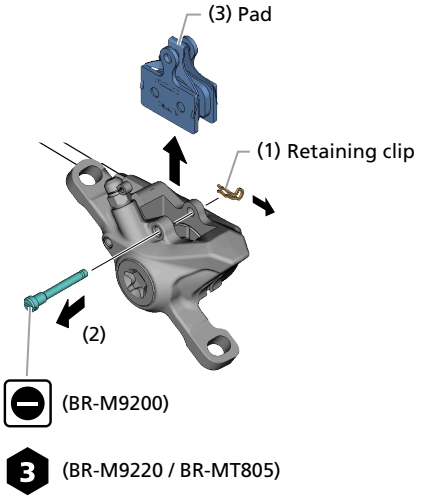

3. **Clean the pistons and the surrounding area.**
4. **Set the brake lever so that it is parallel to the ground.**

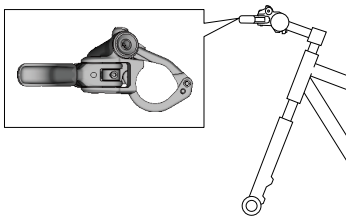

5. **Remove the bleed screw and O-ring, and insert the oil funnel.**

   Do not insert the oil stopper.

   If you push the pistons back without attaching the oil funnel to the brake lever, the diaphragm of the brake lever may be damaged by the oil pressure.

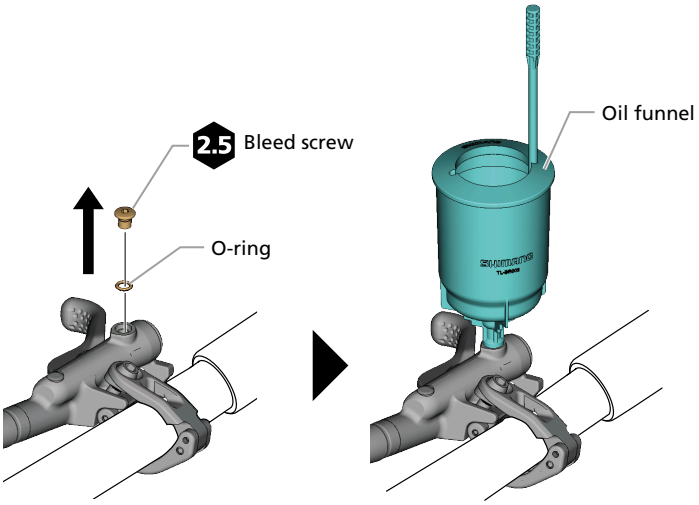

6. **Push the pistons straight back as far as they will go.**

   This brake system is designed to automatically adjust the gap between the rotor and the pads by the pistons gradually protruding in relation to the wear of the pads. As a result, when the pads are replaced, the pistons need to be pushed back into position.

   Use a flat-shaped tool to push the pistons back while being careful not to twist them.

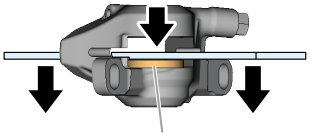

NOTICE

- Do not push the pistons with a sharp tool. Doing so may damage the pistons.

7. **Remove the oil funnel, then install the bleed screw and O-ring.**

   Follow the procedure in "Adding SHIMANO low viscosity oil and bleeding air."

   - Adding SHIMANO low viscosity oil and bleeding air (BR-M9200)
   - Adding SHIMANO low viscosity oil and bleeding air (BR-M9220 / BR-MT805)

8. **Set the pad presser spring in the new pads.**

   Set the pads as shown in the figure.

   Some pads have left (L) and right (R) markings. Take note of this when setting them in the caliper.

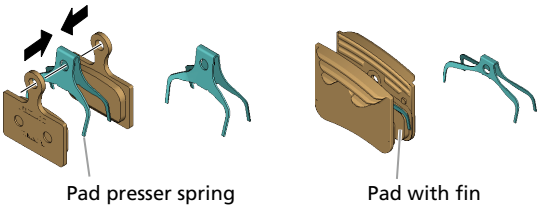

9. **Install the pads.**

   (1) Set the pads in the caliper.

   (2) Install the pad axle.

(3) Install the retaining clip.

(4) Install the pad spacers.

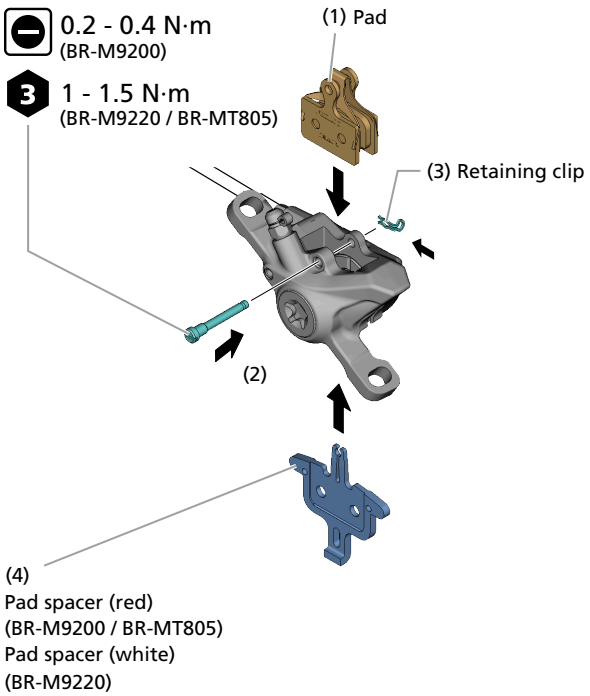

10. Depress the brake lever a few times and make sure that the lever operation becomes stiff.

11. Remove the pad spacer and install the wheel.

12. Check that the rotor does not interfere with the pads.

If there is interference, check if the wheel is installed correctly. If there is no problem with the installation of the wheel, refer to “Installing the brake caliper” and adjust the position of the caliper.

- Installing the brake caliper (post mount type)
- Installing the brake caliper (international-standard mount type)
- Installing the brake caliper (flat mount type)

NOTICE

- To optimize the performance of the pads and rotor after replacing the pads, perform the bed-in procedure as explained in the steps below:

  (1) Ride your bicycle in a flat and safe area without obstacles and accelerate to a moderate speed.

  (2) Operate the brake lever until you slow down to walking speed.

  Do this only with one brake lever at a time. Be careful when performing this procedure. Always operate your brake lever with moderation, especially when you bed in the front brake.

  (3) Repeat steps (1) and (2) at least 20 times for both the front and rear brakes.

  While repeating the process, the brake force will increase.

Replacing SHIMANO low viscosity oil

It is recommended to change the oil when it becomes noticeably discolored.

Perform replacement by referring to “Discharging SHIMANO low viscosity oil” and “Adding SHIMANO low viscosity oil and bleeding air.”

- Discharging SHIMANO low viscosity oil
- Adding SHIMANO low viscosity oil and bleeding air (BR-M9200)
- Adding SHIMANO low viscosity oil and bleeding air (BR-M9220 / BR-MT805)

Discharging SHIMANO low viscosity oil

⚠ CAUTION

- Note the following cautions when handling SHIMANO low viscosity oil:
  - Do not drink. May cause vomiting or diarrhea.
  - Keep out of reach of children.
  - Do not cut, let near heat, weld or pressurize the SHIMANO low viscosity oil container. Doing so may cause an explosion or fire.
  - Disposal of used oil: Follow local county and/or state codes for disposal.
  - Directions: Keep the container sealed to prevent foreign objects and moisture from getting inside, and store it in a cool, dark area away from direct sunlight or heat. Keep from heat or flame.

1. Secure the bicycle so that it is parallel to the ground using a stand, etc.

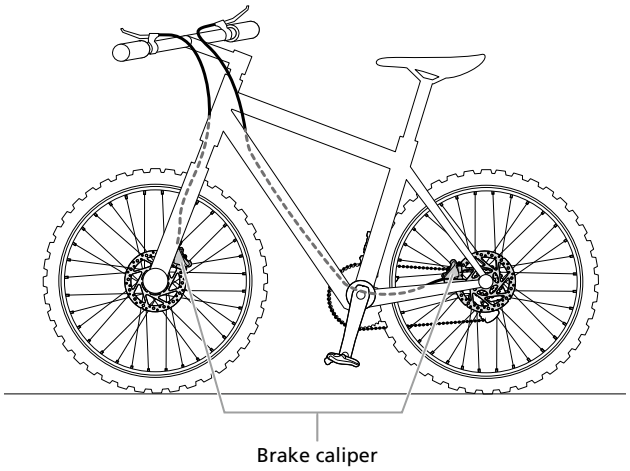

2. Remove the pads.

(1) Remove the retaining clip.

(2) Remove the pad axle.

(3) Remove the pads from the caliper.

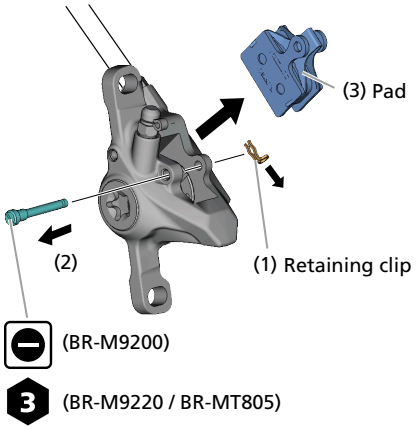

3. Set the brake lever so that it is parallel to the ground.

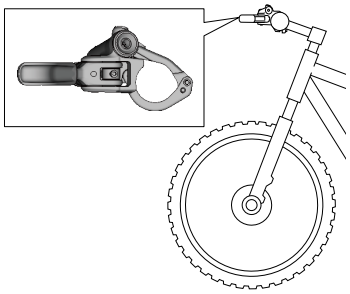

4. **Remove the bleed screw and O-ring, and insert the oil funnel.**

   Do not insert the oil stopper.

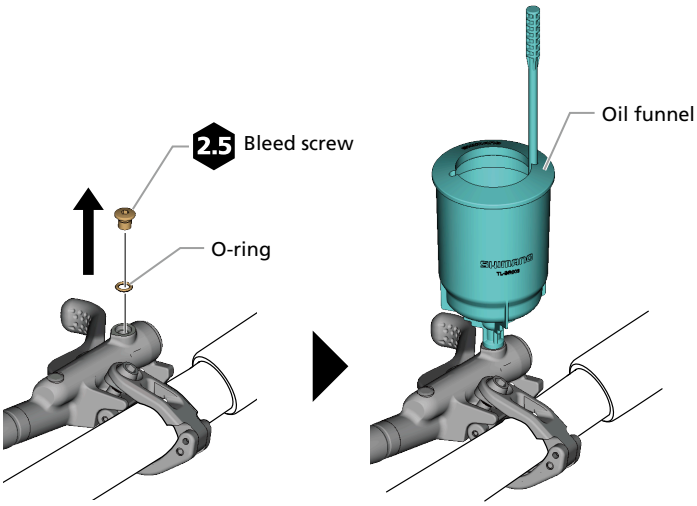

5. **Push the pistons straight back as far as they will go.**

   Use a flat-shaped tool to push the pistons back while being careful not to twist them.

   Do not push the pistons with a sharp tool. Doing so may damage the pistons.

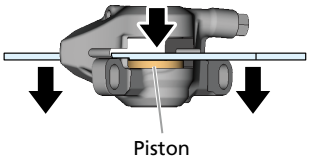

6. **Install the bleed spacer.**

   (1) Set the bleed spacer in the caliper.

   (2) Insert the pad axle.

   (3) Install the retaining clip.

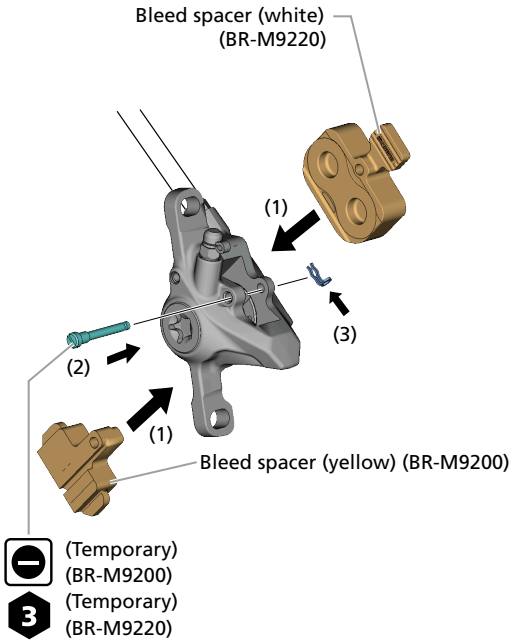

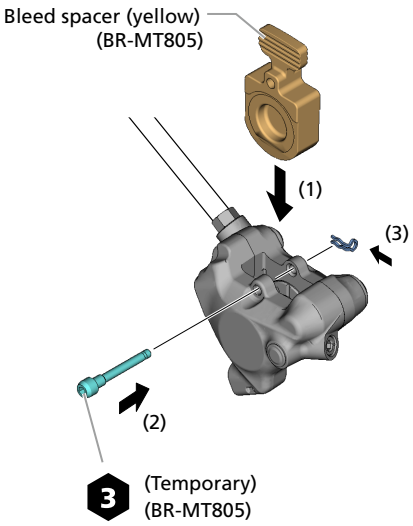

7. Install a bag and tube on the bleed nipple / bleed boss.

BR-M9200

(1) Remove the bleed nipple cap.

(2) Place a 7 mm box wrench in the position shown in the figure.

(3) Connect the tube with bag attached to the bleed nipple.

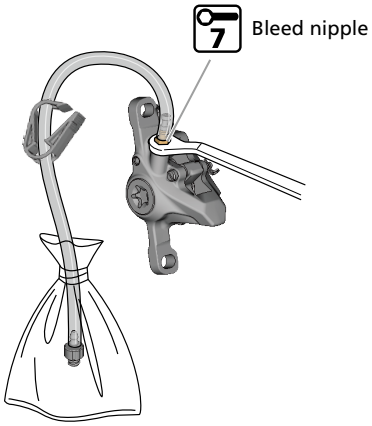

BR-M9220 / BR-MT805

(1) Remove the bleed boss cap and bleed screw cap.

The BR-M9220 does not have a bleed screw cap.

(2) After attaching a bag to the tube, connect the tube to the bleed boss.

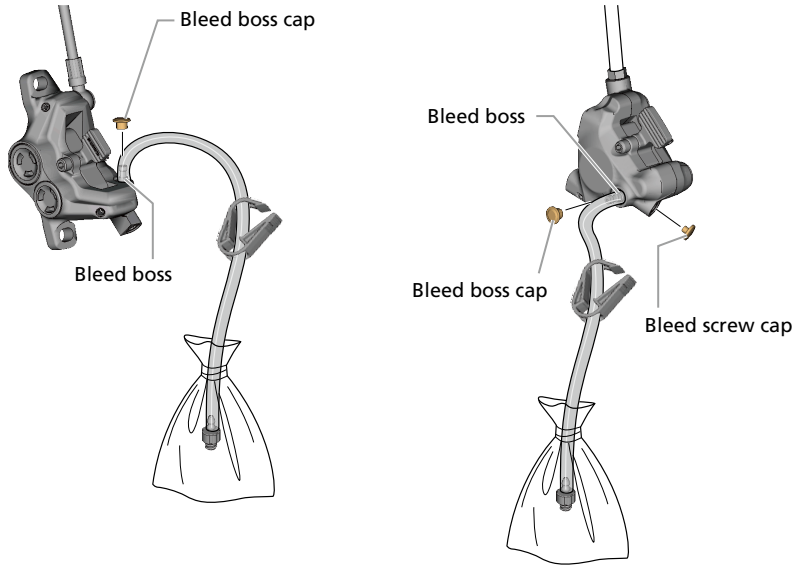

8. Loosen the bleed nipple / bleed screw.

The oil will begin to drain. Operating the brake lever while the oil drains will allow the oil to drain more quickly.

BR-M9200

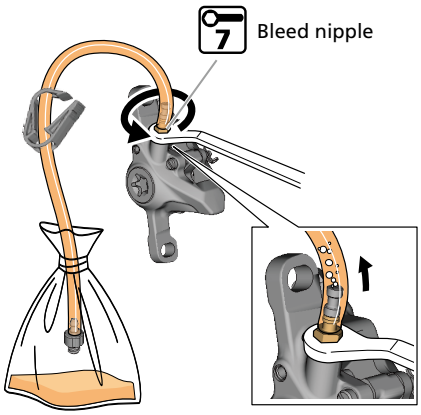

BR-M9220 / BR-MT805

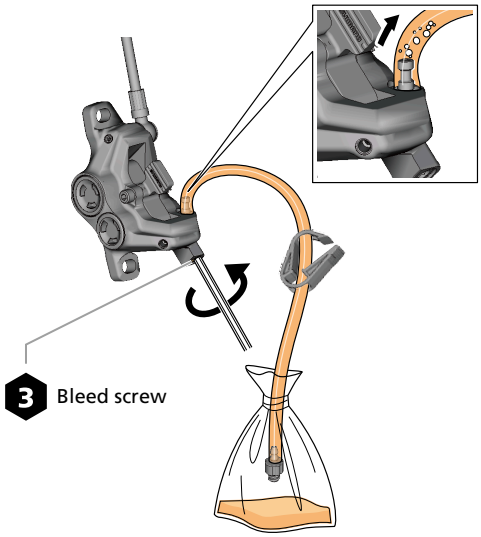

Adding SHIMANO low viscosity oil and bleeding air (BR-M9200)

NOTICE

- When adding oil, use only SHIMANO low viscosity oil.
- When bleeding air you will need the TL-BR001 and TL-BR003 SHIMANO original bleed tools.

1. **Secure the bicycle so that it is parallel to the ground using a stand, etc.**

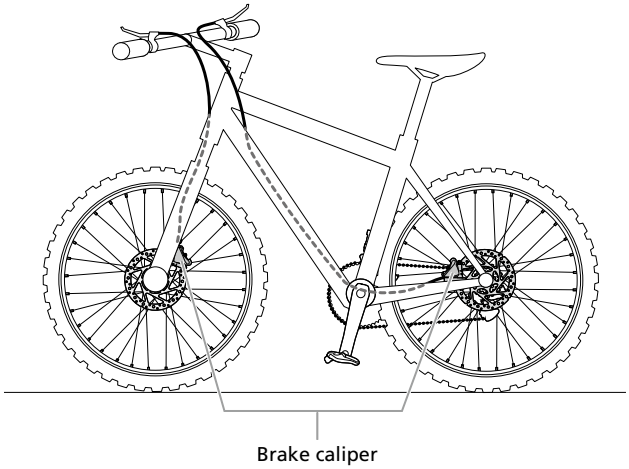

2. **Remove the pads.**
   (1) Remove the retaining clip.
   (2) Remove the pad axle.
   (3) Remove the pads from the caliper.

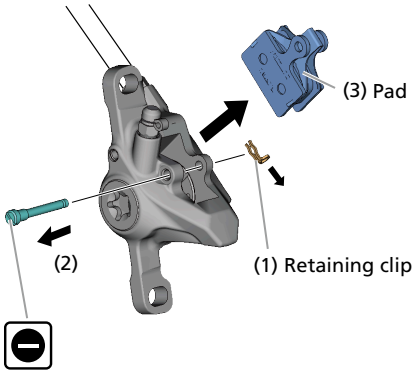

3. **Set the brake lever so that it is parallel to the ground.**

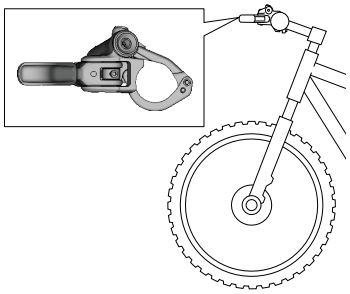

4. **Remove the bleed screw and O-ring, and insert the oil funnel.**

   Do not insert the oil stopper.

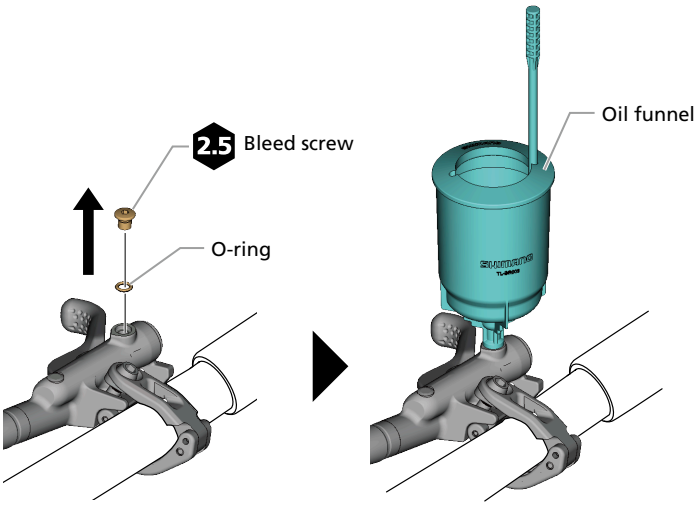

5. **Push the pistons straight back as far as they will go.**

   Use a flat-shaped tool to push the pistons back while being careful not to twist them.

   Do not push the pistons with a sharp tool. Doing so may damage the pistons.

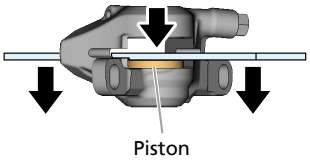

6. **Mount the bleed spacer (yellow).**

   (1) Set the bleed spacer (yellow) in the caliper.

   (2) Insert the pad axle.

   (3) Install the retaining clip.

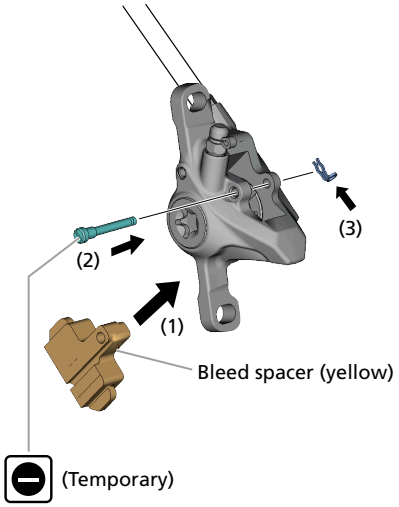

7. Add the oil through the bleed nipple.

Do not depress the brake lever while adding oil. Doing so may introduce air bubbles into the system. If the lever was depressed, drain the oil and re-start the process.

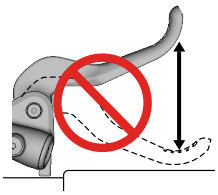

(1) Remove the bleed nipple cap.

(2) Place a 7 mm box wrench in the position shown in the figure.

(3) Fill a syringe with oil, then connect the tube to the bleed nipple.

(4) Loosen the bleed nipple by 1/2 of a turn.

(5) Push the piston of the syringe to add the oil.

(6) Oil will start to come out from the oil funnel. Continue adding the oil until there are no more air bubbles in the oil that is coming out.

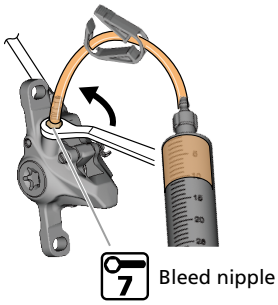

8. Once there are no more air bubbles mixed in with the oil, temporarily tighten the bleed nipple.

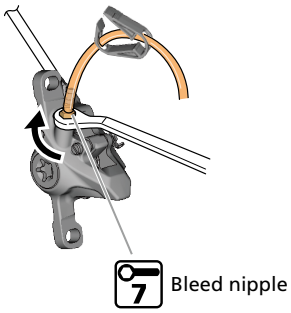

9. Operate the brake lever several times with the handlebar turned to the left and right.

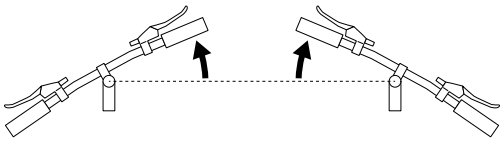

10. Add the oil again through the bleed nipple.

(1) Fill a syringe with oil, then connect the tube to the bleed nipple.

(2) Loosen the bleed nipple by 1/2 of a turn.

(3) Push the piston of the syringe to add the oil.

(4) Oil will start to come out from the oil funnel. Continue adding the oil until there are no more air bubbles in the oil that is coming out.

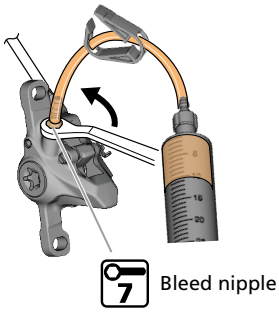

11. Remove the syringe.

Cover the end of the syringe tube with a clean rag to prevent spilling any oil.

12. Bleed the remaining air.

Most of the air bubbles remaining inside the brake system can be bled by performing the following operation:

(1) Place a 7 mm box wrench in the position shown in the figure.

(2) Connect the tube with bag attached to the bleed nipple.

(3) Loosen the bleed nipple.

(4) After a little while, the oil and air bubbles will flow naturally from the bleed nipple into the tube.

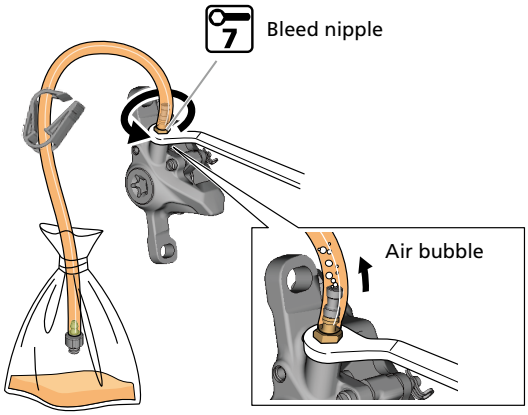

TECH TIPS

- It may help to gently shake the hose or lightly tap the reservoir or caliper with a non-marring screwdriver handle. Changing the caliper position may also improve results.

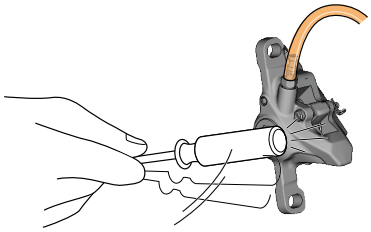

13. **As the oil level drops in the oil funnel, add oil to maintain the oil level and prevent air from getting into the system.**

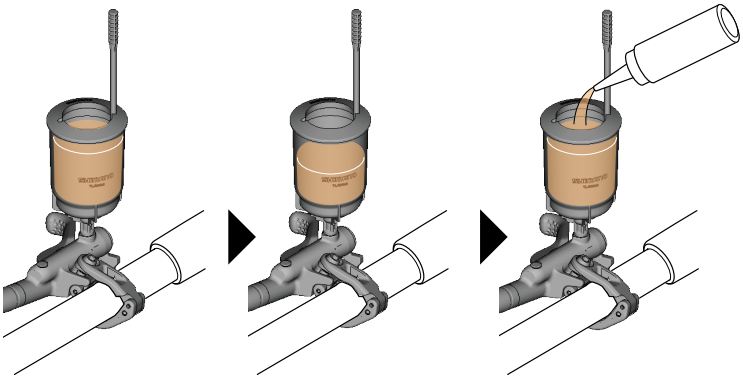

14. **Once no more air bubbles come out from the bleed nipple, temporarily tighten the bleed nipple.**

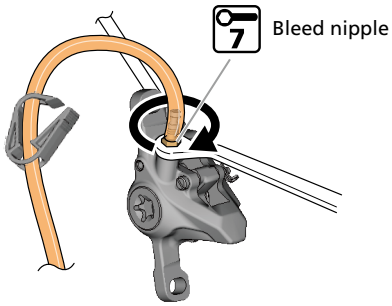

15. **With the brake lever depressed, loosen and tighten the bleed nipple in rapid succession.**

    Loosen and tighten for approximately 0.5 seconds each time to release any air bubbles inside the caliper.

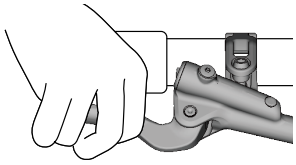

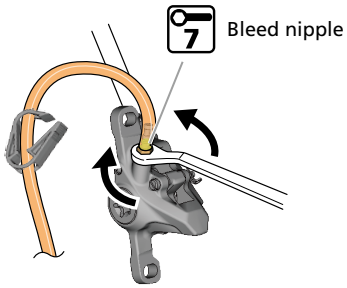

16. **Repeat step 15 two to three times, then tighten the bleed nipple.**

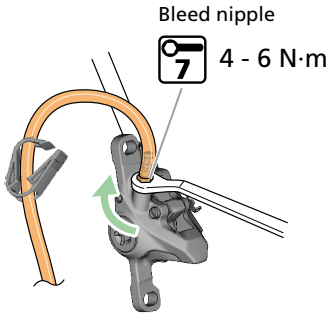

17. **Remove the tube and wipe away any excess oil on the caliper.**
18. **Install the bleed nipple cap.**
19. **Operate the brake lever.**

    Air bubbles in the system rise up through the port into the oil funnel. Continue operating the brake lever until no more bubbles appear.

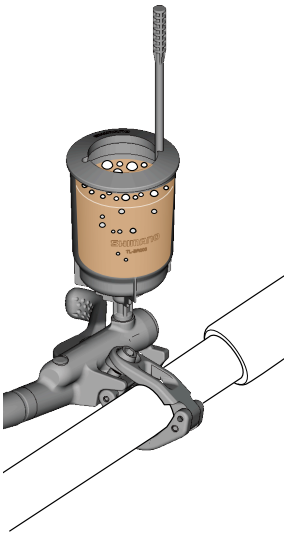

NOTICE

- As the oil level drops in the oil funnel, add oil to maintain the oil level and prevent air from getting into the system.

- Ensure that the oil level in the oil funnel does not drop below the line indicated in the figure.

  If you operate the brake lever with the oil level below the line in the figure, oil that flows back inside the oil funnel may spray out from the oil funnel when the lever is released.

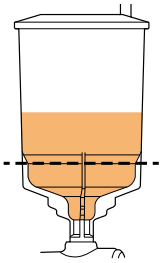

20. Operate the brake lever several times with the handlebar turned to the left and right.

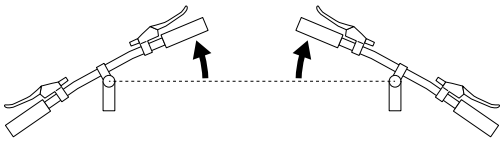

21. Depress the brake lever a few times and make sure that the lever becomes stiff.

If the lever does not become stiff, repeat the procedures from step 12 .

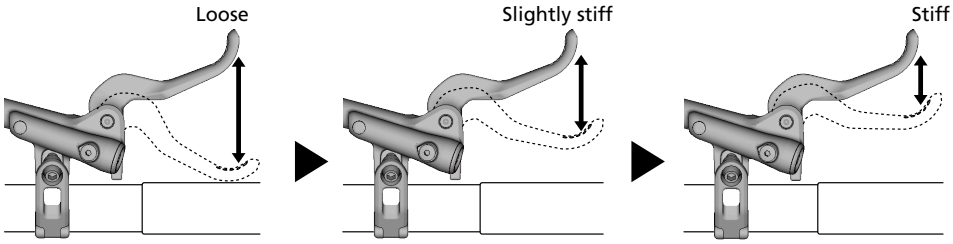

22. Plug the oil funnel with the oil stopper.

Make sure that the side of the oil stopper with the O-ring attached is facing downward.

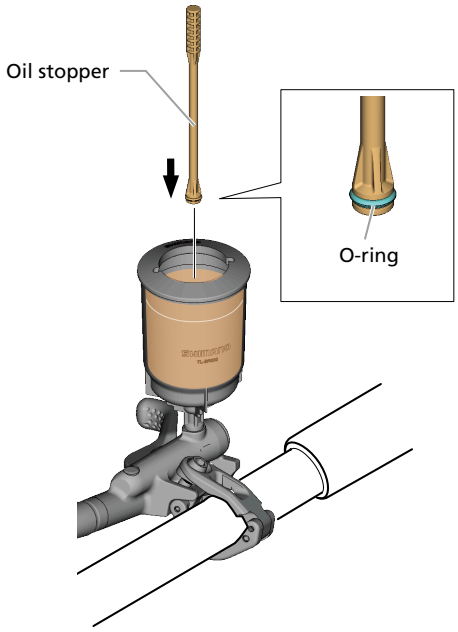

23. Remove the oil funnel with the oil stopper still in place.

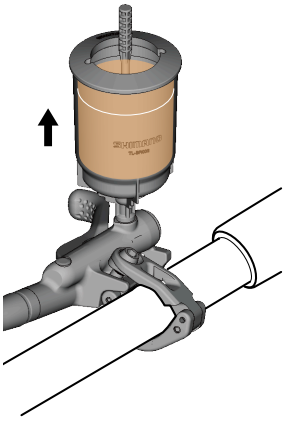

24. Install a bleed screw with O-ring.

Tighten until oil overflows to make sure that no air bubbles remain inside the reservoir.

Do not operate the brake lever. If operated, there is a risk of air bubbles entering the cylinder.

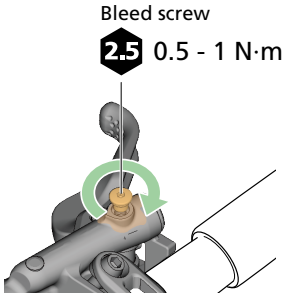

25. Wipe away any oil that has overflowed.

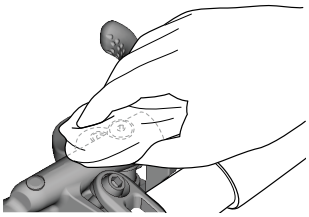

26. Remove the bleed spacer (yellow).

Refer to “Installing the brake caliper” to perform the procedure.

- Installing the brake caliper (post mount type)
- Installing the brake caliper (international-standard mount type)

27. Install the pads.

Refer to step 9 and step 10 of “Replacing the pads” to perform the procedure.

Adding SHIMANO low viscosity oil and bleeding air (BR-M9220 / BR-MT805)

NOTICE

- When adding oil, use only SHIMANO low viscosity oil.
- When bleeding air you will need the TL-BR001 and TL-BR003 SHIMANO original bleed tools.

1. Secure the bicycle so that it is parallel to the ground using a stand, etc.

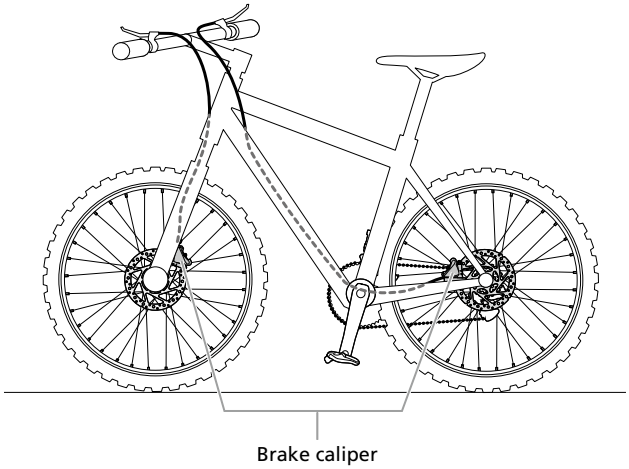

2. Remove the pads.

(1) Remove the retaining clip.

(2) Remove the pad axle.

(3) Remove the pads from the caliper.

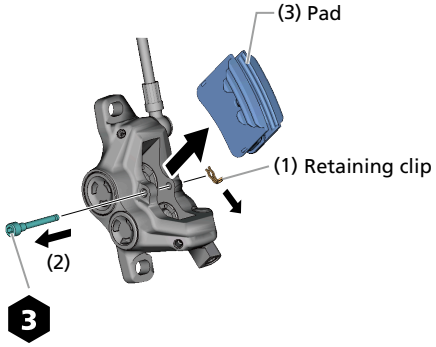

3. Set the brake lever so that it is parallel to the ground.

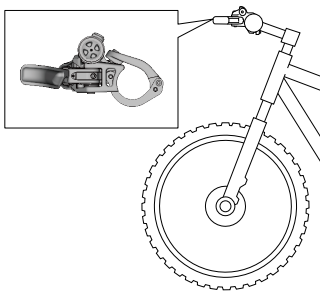

4. Remove the bleed screw and O-ring, and insert the oil funnel.

Do not insert the oil stopper.

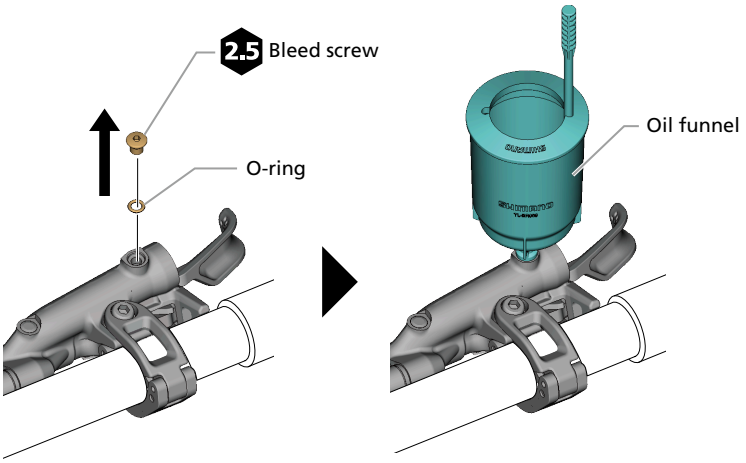

5. Push the pistons straight back as far as they will go.

Use a flat-shaped tool to push the pistons back while being careful not to twist them.

Do not push the pistons with a sharp tool. Doing so may damage the pistons.

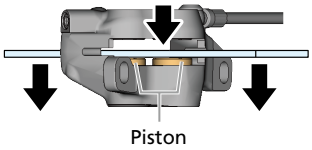

6. Install the bleed spacer.

(1) Set the bleed spacer in the caliper.

(2) Insert the pad axle.

(3) Install the retaining clip.

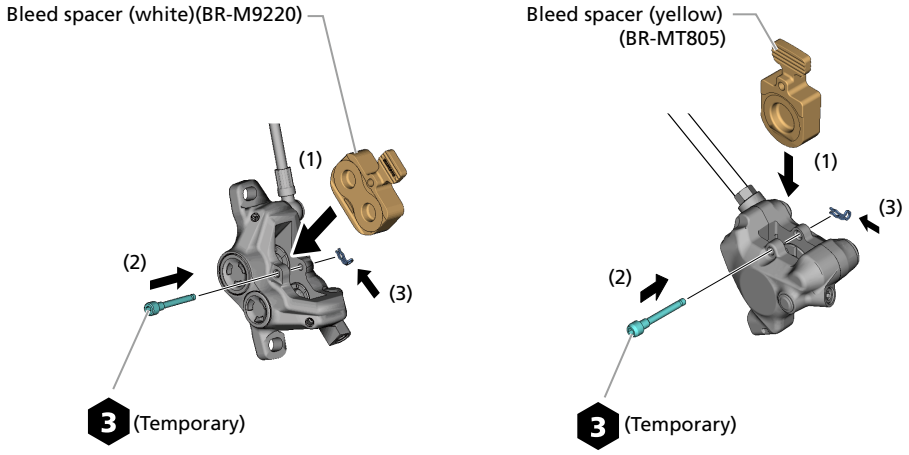

7. Add the oil through the bleed boss.

Do not depress the brake lever while adding oil. Doing so may introduce air bubbles into the system. If the lever was depressed, drain the oil and re-start the process.

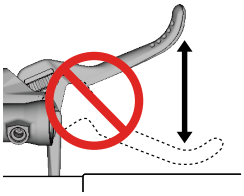

(1) Remove the bleed boss cap and bleed screw cap.

The BR-M9220 does not have a bleed screw cap.

(2) Fill a syringe with oil, then connect the tube to the bleed boss.

(3) Loosen the bleed screw by 1/2 of a turn.

(4) Push the piston of the syringe to add the oil.

(5) Oil will start to come out from the oil funnel. Continue adding the oil until there are no more air bubbles in the oil that is coming out.

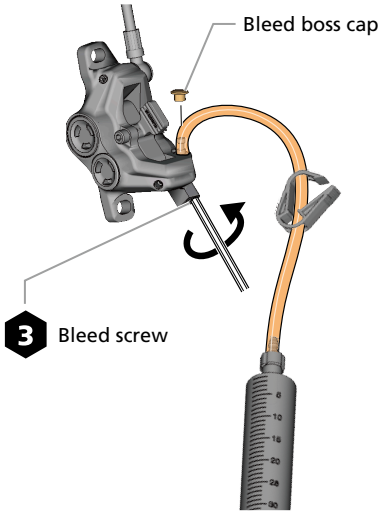

8. Once there are no more air bubbles mixed in with the oil, temporarily tighten the bleed screw.

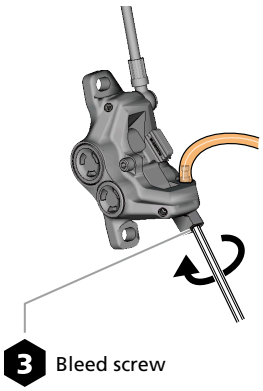

9. Operate the brake lever several times with the handlebar turned to the left and right.

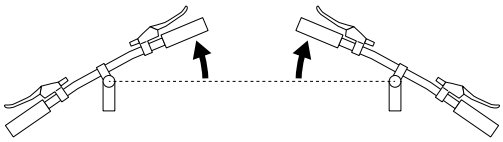

10. Add the oil again through the bleed boss.

(1) Fill a syringe with oil, then connect the tube to the bleed boss.

(2) Loosen the bleed screw by 1/2 of a turn.

(3) Push the piston of the syringe to add the oil.

(4) Oil will start to come out from the oil funnel. Continue adding the oil until there are no more air bubbles in the oil that is coming out.

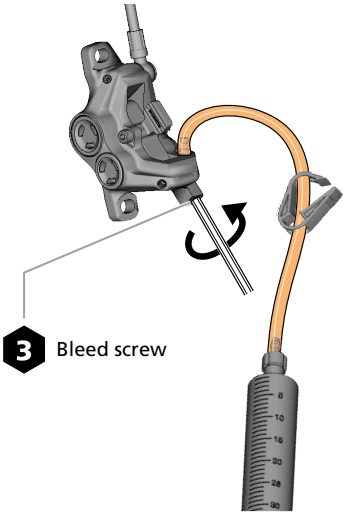

11. Remove the syringe.

Cover the end of the syringe tube with a clean rag to prevent spilling any oil.

12. Bleed the remaining air.

Most of the air bubbles remaining inside the brake system can be bled by performing the following operation:

(1) After attaching a bag to the tube, connect the tube to the bleed boss.

(2) Loosen the bleed screw.

(3) After a little while, the oil and air bubbles will flow naturally from the bleed boss into the tube.

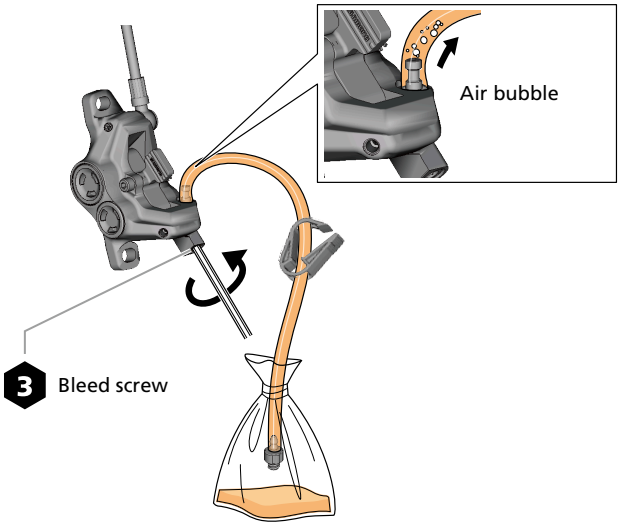

TECH TIPS

- It may help to gently shake the hose or lightly tap the reservoir or caliper with a non-marring screwdriver handle. Changing the caliper position may also improve results.

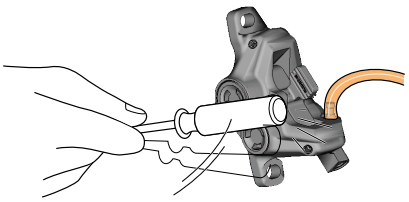

13. **As the oil level drops in the oil funnel, add oil to maintain the oil level and prevent air from getting into the system.**

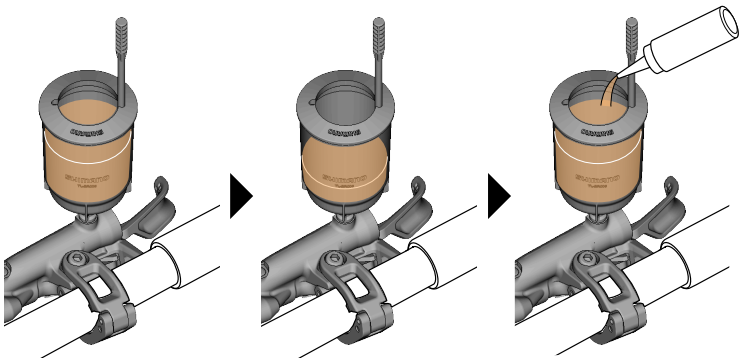

14. **Once no more air bubbles come out from the bleed boss, tighten the bleed screw temporarily.**

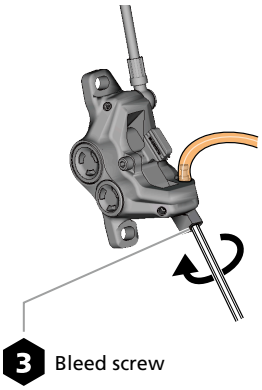

15. **With the brake lever depressed, loosen and tighten the bleed screw in rapid succession.**

    Loosen and tighten for approximately 0.5 seconds each time to release any air bubbles inside the caliper.

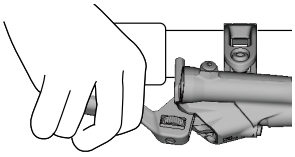

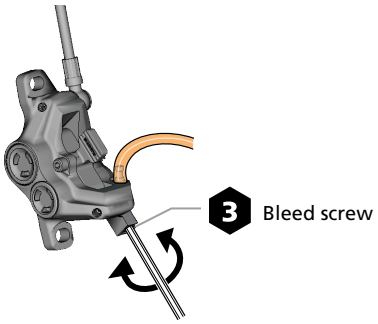

16. **Repeat step 15 two to three times, then tighten the bleed screw.**

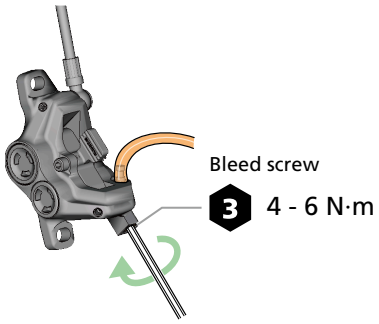

17. **Remove the tube and wipe away any excess oil on the caliper.**
18. **Install the bleed boss cap and bleed screw cap.**

    The BR-M9220 does not have a bleed screw cap.
19. **Operate the brake lever.**

    Air bubbles in the system rise up through the port into the oil funnel. Continue operating the brake lever until no more bubbles appear.

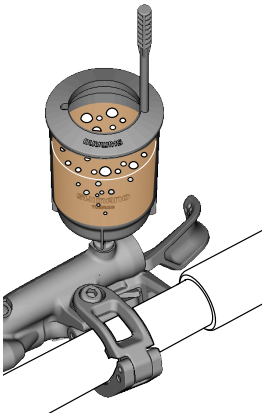

NOTICE

- As the oil level drops in the oil funnel, add oil to maintain the oil level and prevent air from getting into the system.

- Ensure that the oil level in the oil funnel does not drop below the line indicated in the figure.

  If you operate the brake lever with the oil level below the line in the figure, oil that flows back inside the oil funnel may spray out from the oil funnel when the lever is released.

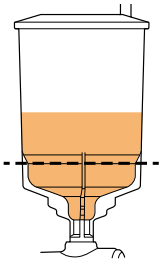

20. Operate the brake lever several times with the handlebar turned to the left and right.

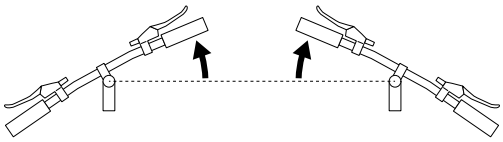

21. Depress the brake lever a few times and make sure that the lever becomes stiff.

If the lever does not become stiff, repeat the procedures from step 12 .

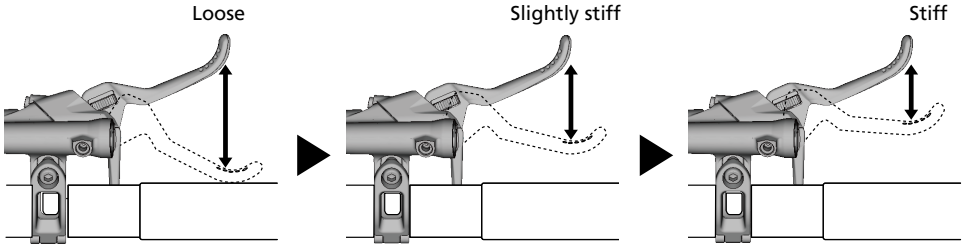

22. Plug the oil funnel with the oil stopper.

Make sure that the side of the oil stopper with the O-ring attached is facing downward.

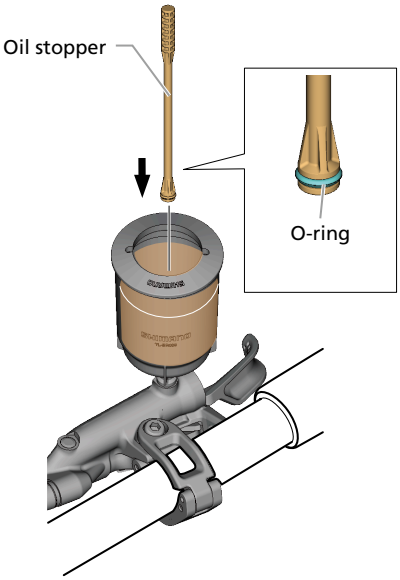

23. Remove the oil funnel with the oil stopper still in place.

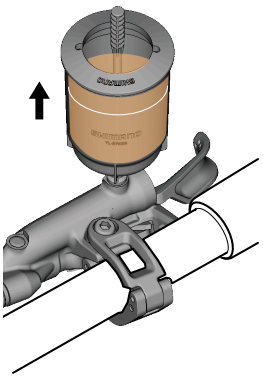

24. Install a bleed screw with O-ring.

Tighten until oil overflows to make sure that no air bubbles remain inside the reservoir.

Do not operate the brake lever. If operated, there is a risk of air bubbles entering the cylinder.

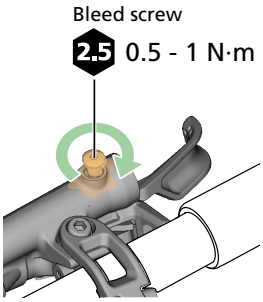

25. Wipe away any oil that has overflowed.

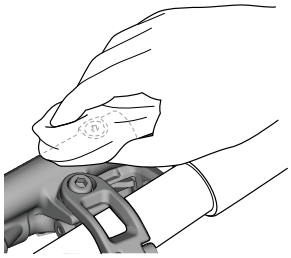

26. Remove the bleed spacer.

Refer to “Installing the brake caliper” to perform the procedure.

- Installing the brake caliper (post mount type)
- Installing the brake caliper (international-standard mount type)
- Installing the brake caliper (flat mount type)

27. Install the pads.

Refer to step 9 and step 10 of “Replacing the pads” to perform the procedure.

Replacing the brake hose

After replacing the brake hose, refer to " Replacing SHIMANO low viscosity oil " to add the SHIMANO low viscosity oil and bleed the air from the system.

Checking the hose length and cutting the hose

1. **Route the brake hose into the final installation position.**

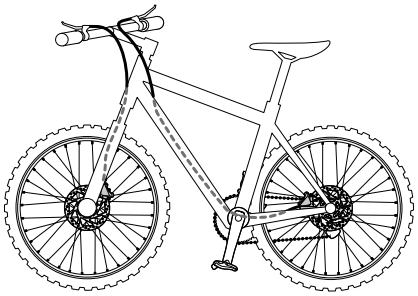

2. **After determining the appropriate length, add a witness mark on the brake hose as shown in the figure.**

   Add marks to both the brake lever side and caliper side of the hose.

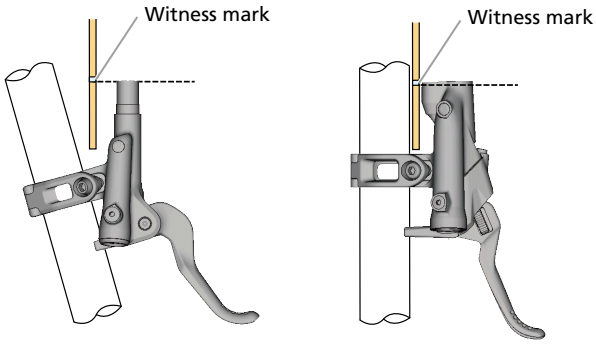

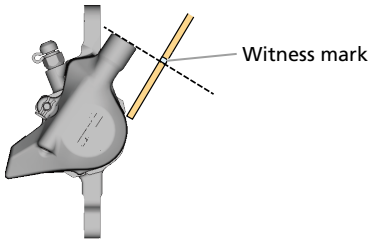

3. **Cut the brake hose.**

   Refer to " Cutting the hose " in "Installing the brake hose."

Assembly to the brake lever

1. **Pass the cover, flare nut, and olive over the brake hose in the order shown below.**

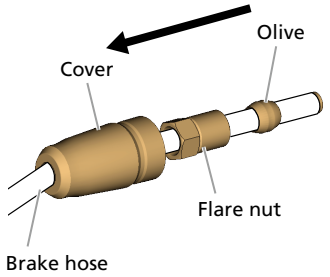

2. **Check that the olive is in the position shown in the figure, then apply Premium Grease to the threads of the flare nut and outer surface of the olive.**

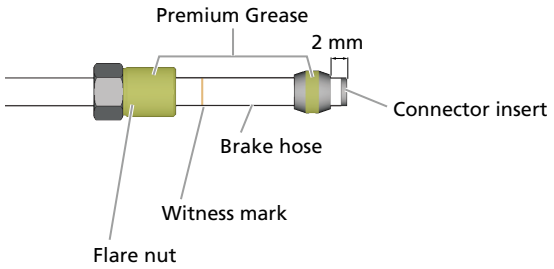

3. **Install the brake hose in the brake lever.**

   Insert the hose up to the witness mark on the outer hose casing.

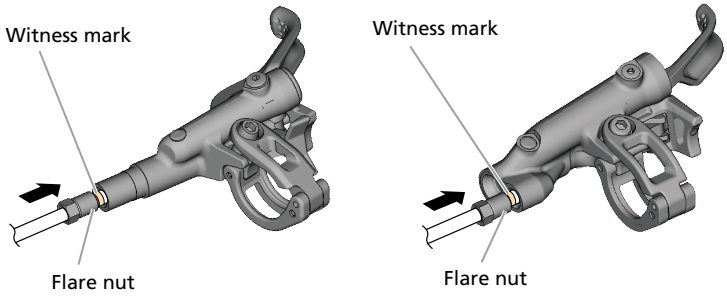

4. **Tighten the flare nut while pushing the brake hose in.**

   After tightening, install the cover.

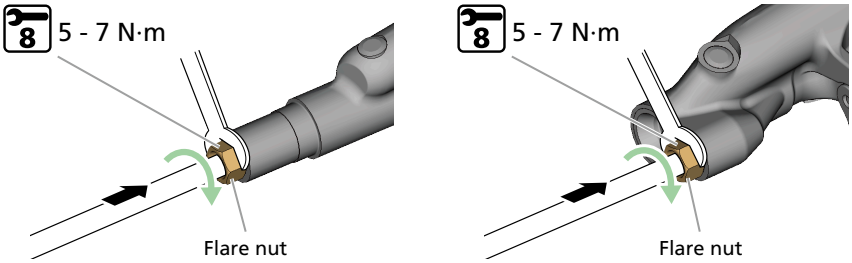

5. **Install the cover.**

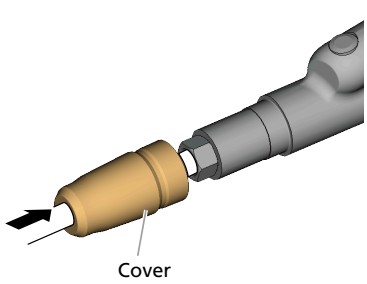

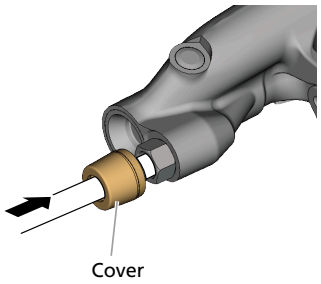

Caliper side

Straight type

1. **Pass the flare nut and olive over the brake hose in the order shown below.**

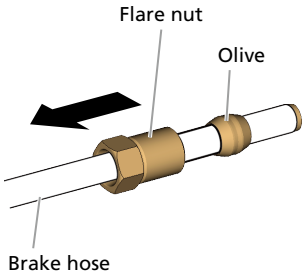

2. **Check that the olive is in the position shown in the figure, then apply Premium Grease to the threads of the flare nut and outer surface of the olive.**

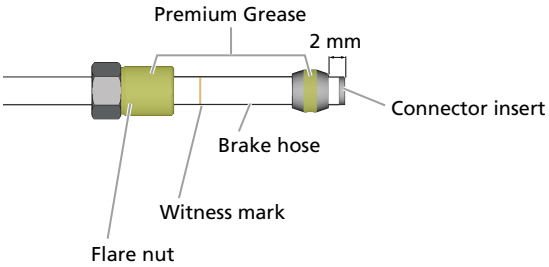

3. **Install the brake hose in the caliper.**

   Insert the hose up to the witness mark on the outer hose casing.

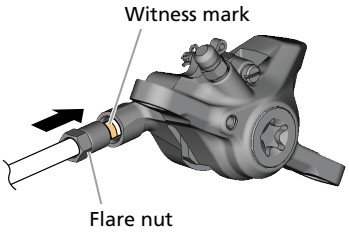

NOTICE

- Do not let the brake hose become twisted when installing it. When the caliper and brake lever are not installed on the bicycle, there should be no twist in the hose if the caliper and brake lever are in the positions shown in the figure below.

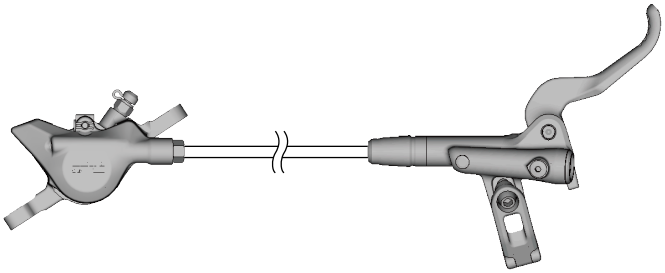

4. **Tighten the flare nut while pushing the brake hose in.**

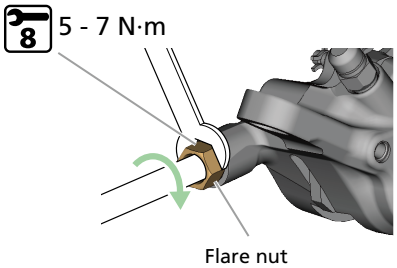

Banjo type

Install the brake hose on the caliper as shown in the figure.

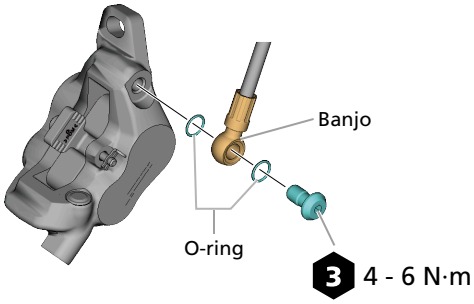

Caliper piston maintenance

Adjust the pistons with the following procedure if these pistons do not operate properly, if they protrude unevenly, or if the pads remain in contact with the rotor.

1. **Remove the wheel from the frame.**
2. **Remove the pads.**
   (1) Remove the retaining clip.
   (2) Remove the pad axle.
   (3) Remove the pads from the caliper.

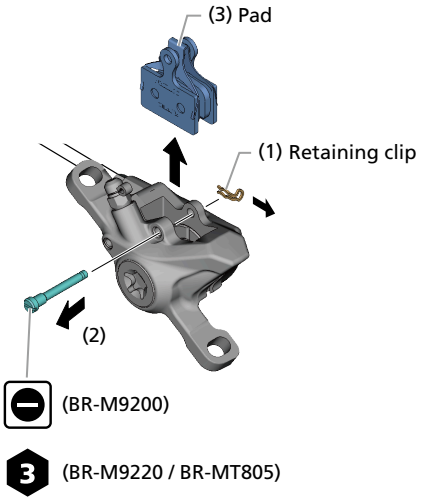

3. **Clean the pistons and the surrounding area.**
4. **Set the brake lever so that it is parallel to the ground.**

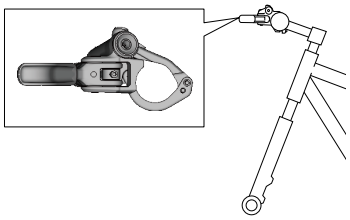

5. **Remove the bleed screw and O-ring, and insert the oil funnel.**

   Do not insert the oil stopper.

   If you push the pistons back without attaching the oil funnel to the brake lever, the diaphragm of the brake lever may be damaged by the oil pressure.

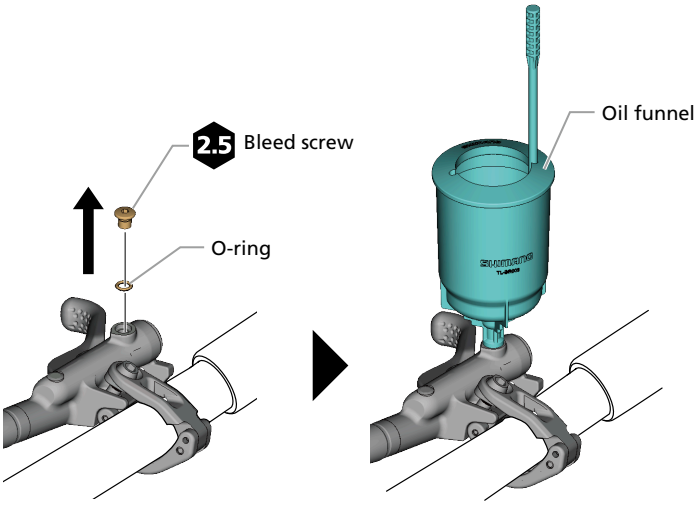

6. **Push the pistons straight back as far as they will go.**

   Use a flat-shaped tool to push the pistons back while being careful not to twist them.

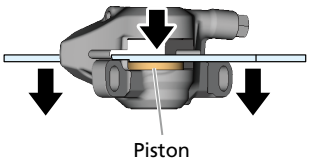

NOTICE

- Do not push the pistons with a sharp tool. Doing so may damage the pistons.

7. **Remove the oil funnel, then install the bleed screw and O-ring.**

   Follow the procedure in "Adding SHIMANO low viscosity oil and bleeding air."

   - Adding SHIMANO low viscosity oil and bleeding air (BR-M9200)
   - Adding SHIMANO low viscosity oil and bleeding air (BR-M9220 / BR-MT805)

8. **Install the pads.**

   (1) Set the pads in the caliper.

   (2) Install the pad axle.

   (3) Install the retaining clip.

   (4) Install the pad spacers.

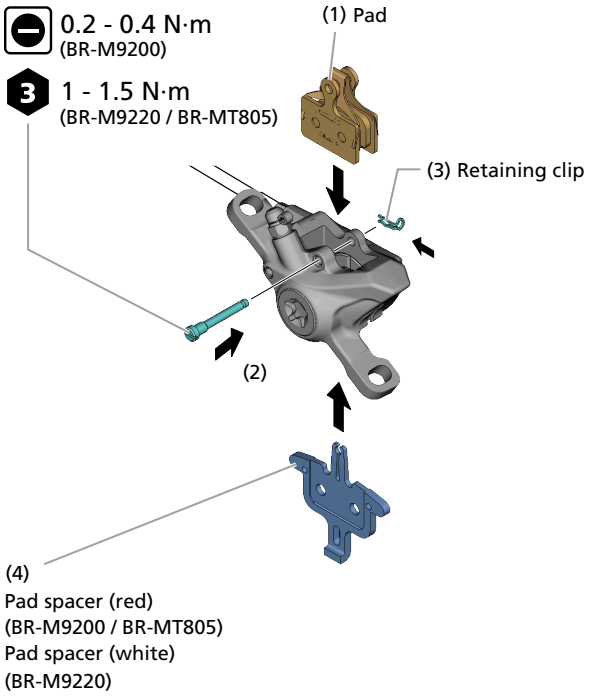

9. **Depress the lever a few times and make sure pistons protrude evenly.**

   If the pistons do not protrude evenly, repeat steps 2 to 9 .

10. **Remove the pad spacer and install the wheel.**

11. **Check that the rotor does not interfere with the pads.**

    If there is interference, loosen the mounting screw and adjust until there is no more interference.

Replacing the diaphragm

After replacing the diaphragm, refer to " Replacing SHIMANO low viscosity oil " to add the SHIMANO low viscosity oil and bleed the air from the system.

1. **Discharge the SHIMANO low viscosity oil.**

   Refer to the " Discharging SHIMANO low viscosity oil " section to perform the procedure.

2. **Loosen the cap fixing screw.**

   You may need to pull the lever to access the cap fixing screw. Loosen until one or two threads start to be seen. Do not completely remove the cap fixing screw.

BL-M9200

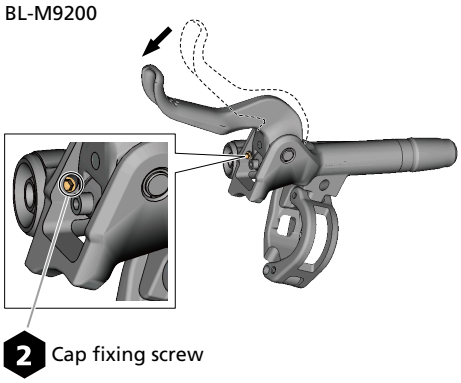

BL-M9220

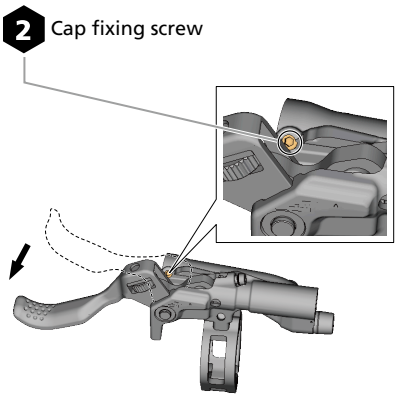

NOTICE

- For the BL-M9220, remove the cover before performing step 2 .

  Refer to " Replacing the cover (BL-M9220) " for information on how to remove the cover.
- With the BL-M9220, the tool may not reach the cap fixing screw simply by pulling the lever. Perform reach adjustment to ensure that the tool can reach the cap fixing screw before performing step 2 .

3. **Remove the bleed screw and O-ring.**

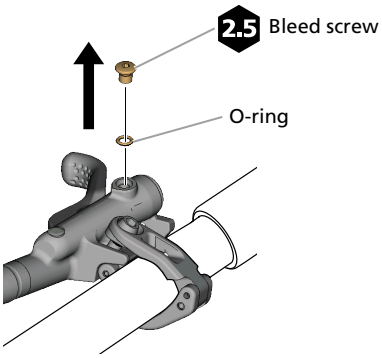

4. **Push the cap and diaphragm out.**

   Insert a thin screwdriver or hexagon wrench into the hole where the bleed screw was removed, and push out the diaphragm.

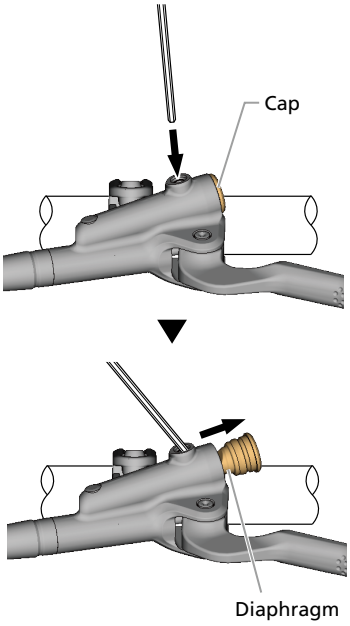

5. **Pull the cap and diaphragm out.**

   Grasp the exposed cap and diaphragm, and pull them out.

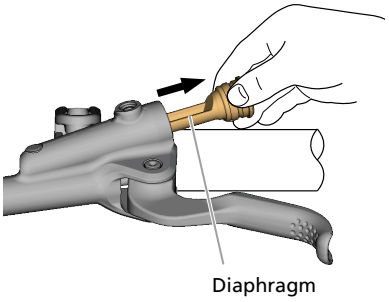

6. **Remove the cap from the diaphragm.**

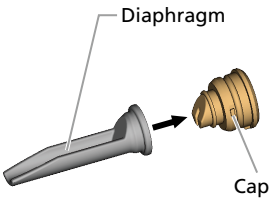

7. Attach the cap to a new diaphragm.

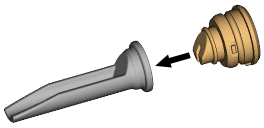

NOTICE

- For the BL-M9200, attach the cap to the diaphragm so that the diagonal parts indicated in the figure are aligned.

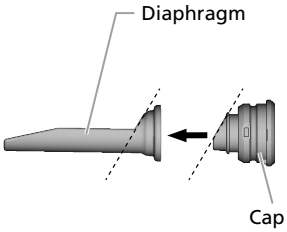

For the BL-M9220, attach the cap so the protrusion sits in a gap in the diaphragm.

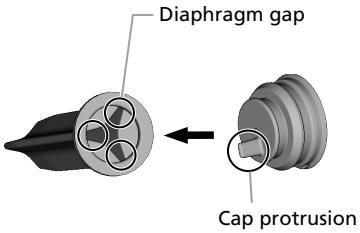

- Replace the diaphragm with one corresponding to each brake lever.

BL-M9200	BL-M9220
Y-part: Y8WM9801T	Y-part: Y2RJ9801T

8. Insert the diaphragm into the brake lever body.

Insert the protrusion for cap positioning into the groove on the lever body.

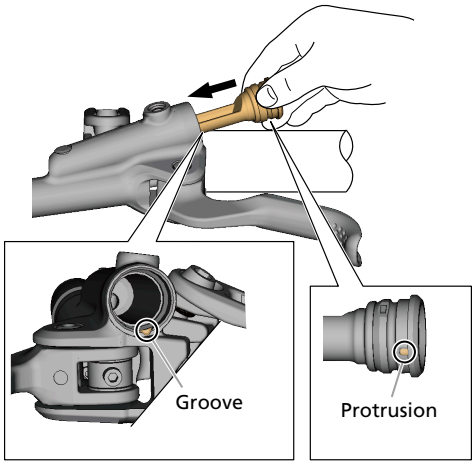

9. Tighten the cap fixing screw.

You may need to pull the lever to access the cap fixing screw. Tighten while pushing the cap in so that there is no gap between the cap and the brake lever body. Be careful not to tighten excessively.

BL-M9200

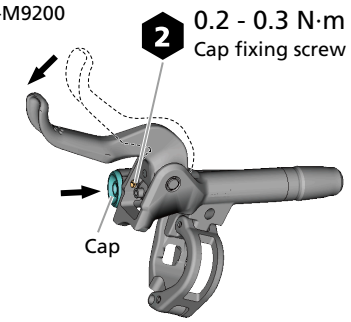

BL-M9220

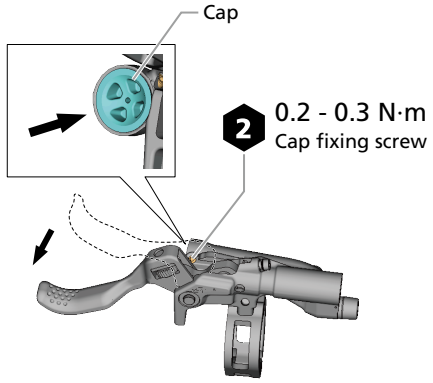

NOTICE

- For the BL-M9220, install the cover after performing step 9 .
  Refer to " Replacing the cover (BL-M9220) " for information on how to install the cover.

Replacing the lever blade (BL-M9200)

After replacing the lever blade, perform free stroke adjustment and reach adjustment.

1. **Remove the lever axle fixing screw cap.**

   Remove it using a tool with a sharp end, such as a solder aid.

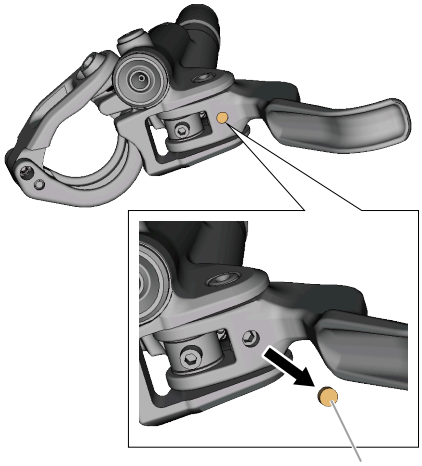

2. **Loosen the lever axle fixing screw.**

   Loosen until one or two threads start to be seen. Do not completely remove the lever axle fixing screw.

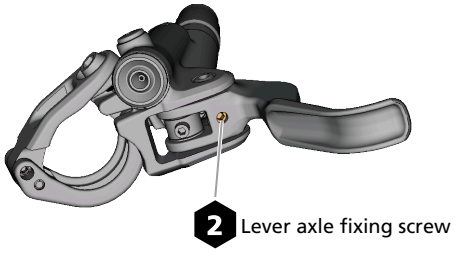

3. **Remove the lever axle.**

   Use a tool such as a hexagon wrench to push out the lever axle from the non-recessed end of the lever axle.

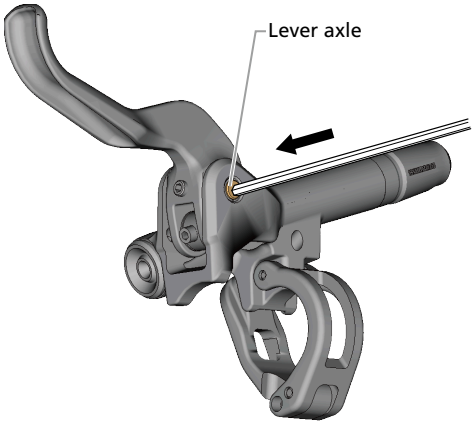

4. **Remove the lever blade.**

   Turn the reach adjustment screw clockwise until the lever blade comes off.

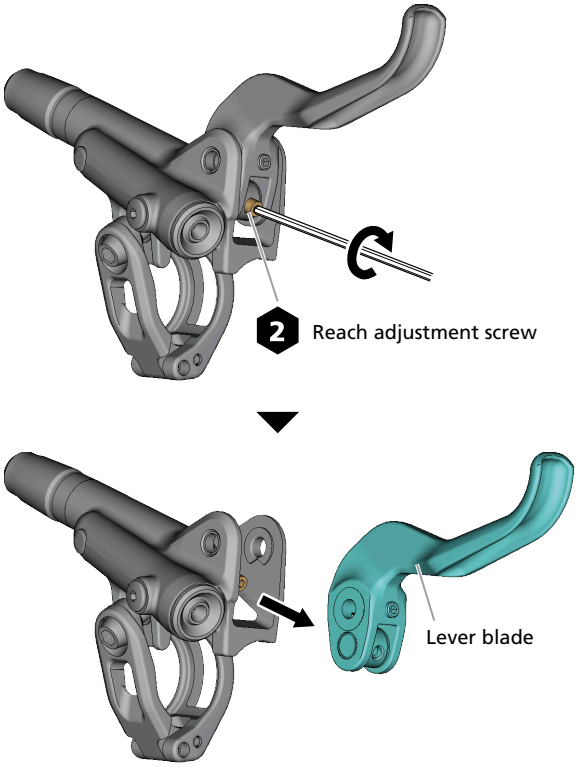

5. **Install a new lever blade, then insert the lever axle.**

   Insert the lever axle so that the recessed end of the lever axle is on the diaphragm side, as indicated in the figure.

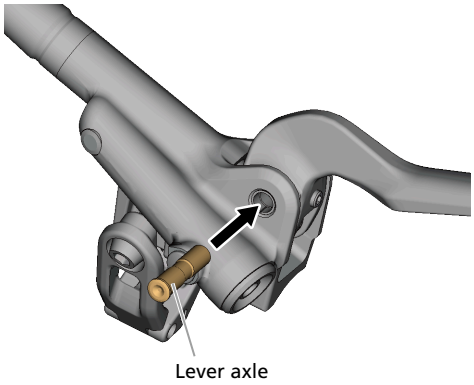

6. **Turn the reach adjustment screw counterclockwise to screw it into the lever blade.**

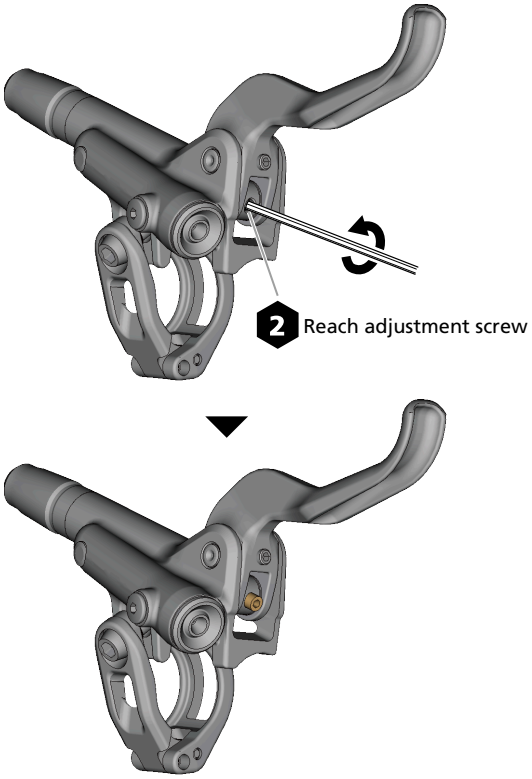

7. **Tighten the lever axle fixing screw.**

8. **Install the lever axle fixing screw cap.**

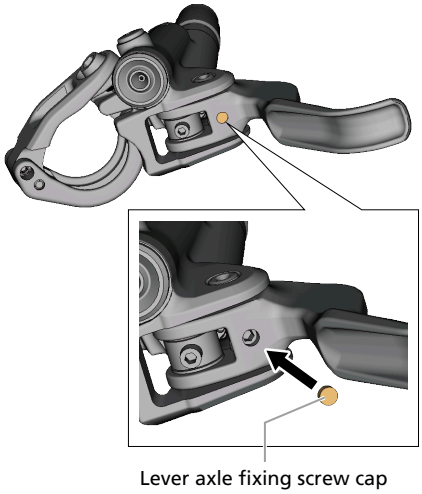

Replacing the lever blade / lever blade fixing spring (BL-M9220)

1. **Loosen the lever axle fixing screw.**

   Loosen until one or two threads start to be seen. Do not completely remove the lever axle fixing screw.

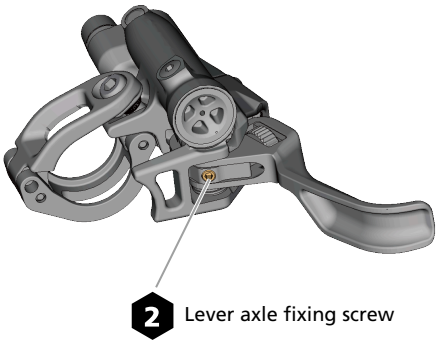

2. **Remove the lever axle.**

   Pull it out with pliers or a similar tool.

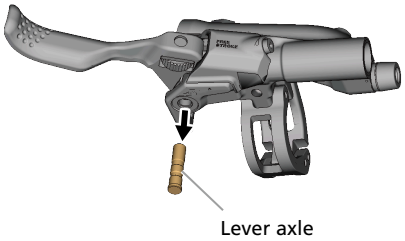

3. **Remove the lever blade, lever blade fixing spring, and spacer.**

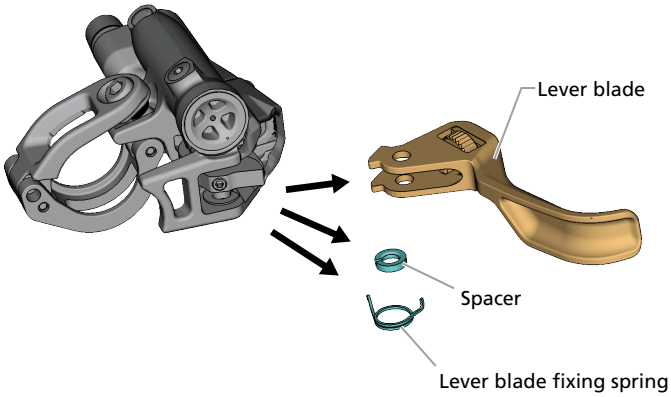

4. **Place the new lever blade fixing spring and spacer in the same positions.**

   Place the lever blade fixing spring and spacer combined.

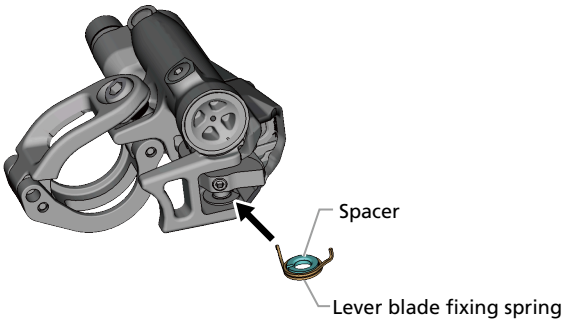

TECH TIPS

- It will be easier to place them if the lever axle is inserted partway first.

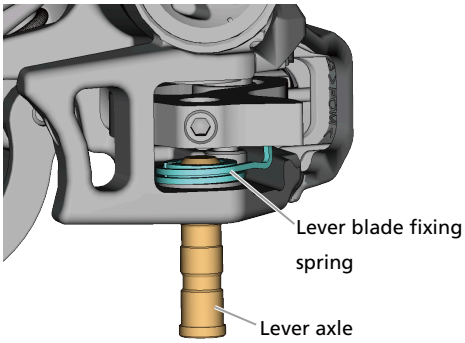

5. **Place the new lever blade in the position of the original lever blade.**

   Place the part indicated in the figure between the lever blade.

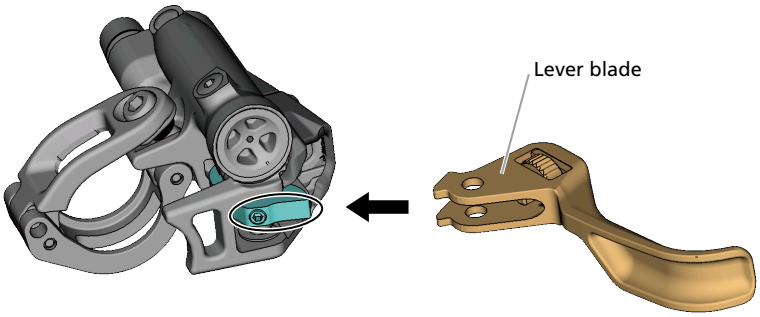

TECH TIPS

- Hook the ends of the lever blade fixing spring in the positions indicated in the cross section.

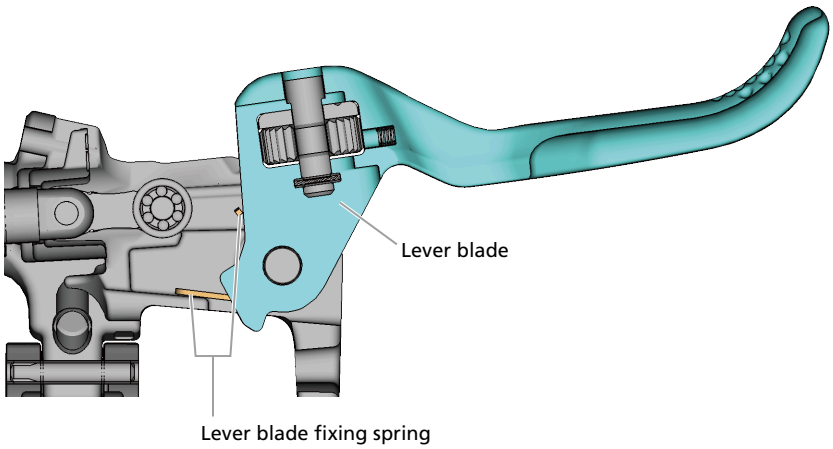

- It will be easier to do so if the reach adjustment dial is turned counterclockwise first.

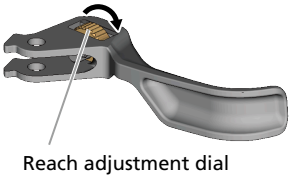

6. Insert the lever axle.

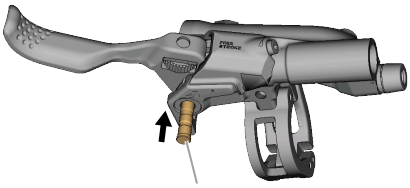

7. Tighten the lever axle fixing screw.

Tighten the screw while applying pressure to the lever blade and lever axle in the direction indicated by the arrow.

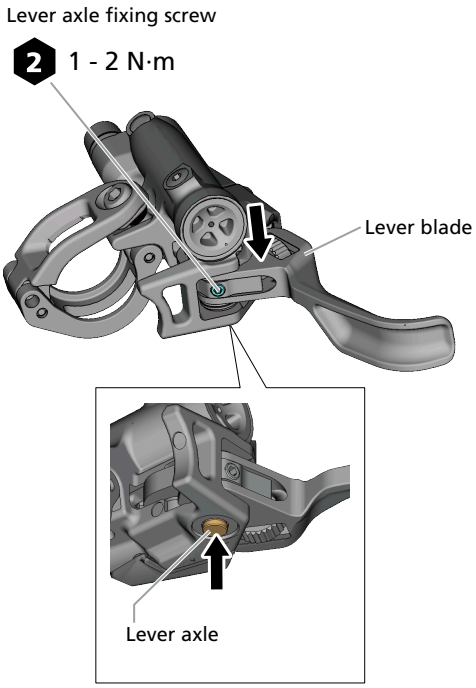
Lever axle fixing screw
2
1 - 2 N·m
Lever blade
Lever axle

Replacing the cover (BL-M9220)

After replacing the cover, perform free stroke adjustment and reach adjustment.

1. **Remove the free stroke adjustment screw and spacer.**

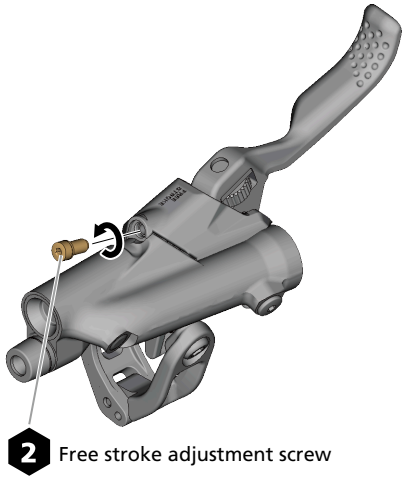

2. **Remove the cover.**

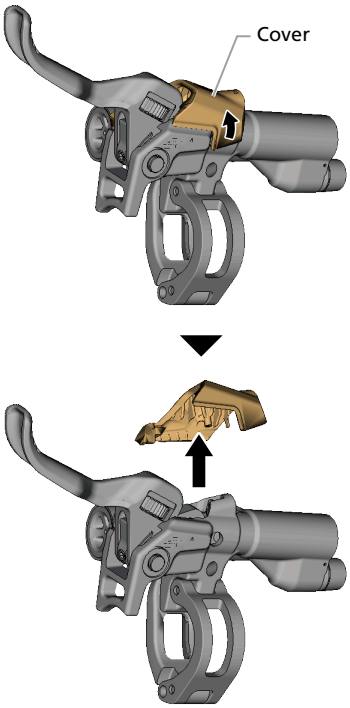

3. **Install the new cover.**

   Engage the hook of the cover before attaching the cover.

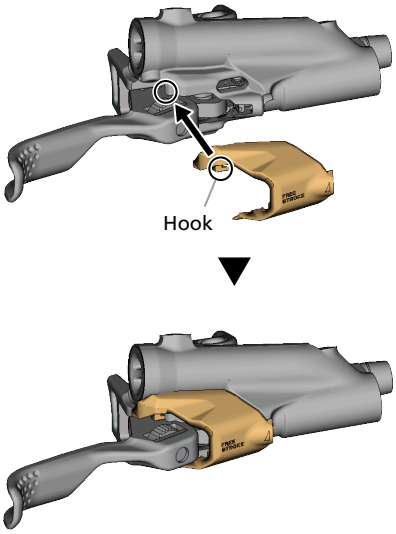

4. **Install the free stroke adjustment screw and spacer.**

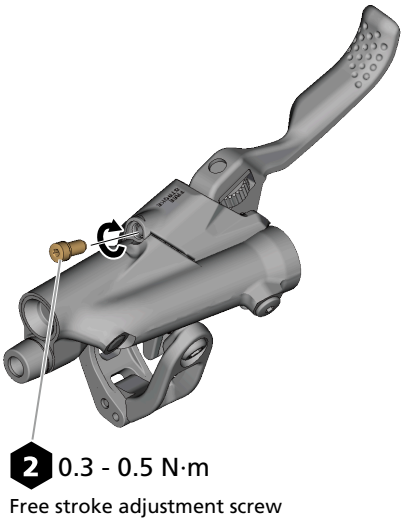

Designated small parts for magnesium components

The BL-M9200 is made of magnesium. Use small parts designated for use with magnesium components as shown in the following figure.

If parts other than those designated for use with magnesium components are used, undue corrosion may occur.

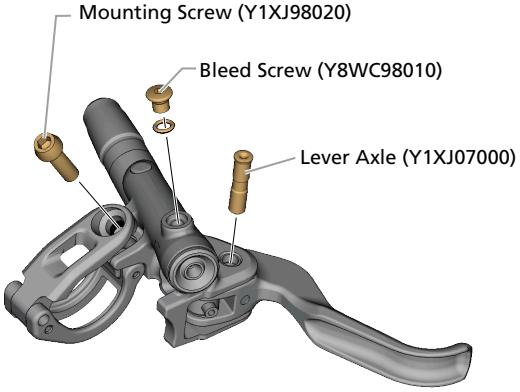

SHIMANO

SHIMANO NORTH AMERICA BICYCLE, INC.
One Holland, Irvine, California 92618, U.S.A. Phone: +1-949-951-5003

SHIMANO EUROPE B.V.
High Tech Campus 92, 5656 AG Eindhoven, The Netherlands Phone: +31-402-612222
Only EU General Contact : contactshimano@shimano-eu.com

SHIMANO INC.
3-77 Oimatsu-cho, Sakai-ku, Sakai City, Osaka 590-8577, Japan

Please note: specifications are subject to change for improvement without notice. (English)

© Mar. 2025 by SHIMANO INC. ITP