Dealer's Manual

ROAD	GRAVEL	MTB
E-BIKE	LIFESTYLE	GENERAL

Hydraulic Disc Brake

SHIMANO CUES

BR-U8000
BR-U8020
BL-U8000

Contents

IMPORTANT NOTICE **3**
TO ENSURE SAFETY **4**
List of tools to be used **11**
Installation/removal **12**
Installing the brake lever 12
Installing the disc brake rotor 13
Removing the disc brake rotor 14
Installing the brake calipers 14
Installing the brake hose 23
Adjustment **32**
Adjusting the reach 32
Maintenance **33**
Replacing the brake pads 33
SHIMANO genuine mineral oil replacement 36
Replacing the brake hose 45
Caliper piston maintenance 48
Replacing the diaphragm 50

IMPORTANT NOTICE

- This dealer's manual is intended primarily for use by professional bicycle mechanics.
  Users who are not professionally trained for bicycle assembly should not attempt to install the components themselves using the dealer's manuals.
  If any part of the information on the manual is unclear to you, do not proceed with the installation. Instead, contact your place of purchase or a distributor for assistance.
- Make sure to read all manuals included with each product.
- Do not disassemble or modify the product other than as stated in the information contained in this dealer's manual.
- All manuals and technical documents are accessible online at https://si.shimano.com .
- For consumers who do not have easy access to the internet, please contact a SHIMANO distributor or any of the SHIMANO offices to obtain a hardcopy of the user's manual.
- Please observe the appropriate rules and regulations of the country, state or region in which you conduct your business as a dealer.

For safety, be sure to read this dealer's manual thoroughly before use, and follow it for correct use.

The following instructions must be observed at all times in order to prevent personal injury and physical damage to equipment and surroundings.
The instructions are classified according to the degree of danger or damage which may occur if the product is used incorrectly.

DANGER	Failure to follow the instructions will result in death or serious injury.
WARNING	Failure to follow the instructions could result in death or serious injury.
CAUTION	Failure to follow the instructions could cause personal injury or physical damage to equipment and surroundings.

TO ENSURE SAFETY

⚠ WARNING

- Be sure to follow the instructions provided in the manuals when installing the product.
  Only use SHIMANO genuine parts. If a component or replacement part is incorrectly assembled or adjusted, it can lead to component failure and cause the rider to lose control and crash.
- Wear approved eye protection while performing maintenance tasks such as replacing components.

Be sure to also inform users of the following:

- Because each bicycle may handle slightly differently depending on the model, be sure to learn the proper braking technique (including brake lever pressure and bicycle control characteristics) and operation of your bicycle. Improper use of your bicycle's brake system may result in a loss of control, which could lead to serious injury due to a fall or collision.
- Riders must become accustomed to the higher performance of this brake before riding the bicycle. The 220 mm, 203 mm, and 180 mm disc brake rotors provide a higher braking force than the 160 mm disc brake rotors. If you ride the bicycle without becoming sufficiently familiar with the braking characteristics, braking may cause you to fall off the bicycle, potentially causing serious injury or a fatal accident.
- Keep your fingers away from rotating disc brake rotors. The disc brake rotor is sharp enough to inflict severe injury to your fingers if caught within the openings of moving rotor.

- Do not touch the calipers or disc brake rotor while riding or immediately after dismounting from the bicycle. The calipers and disc brake rotor will become hot when the brakes are operated, so you may get burned if you touch them.
- Do not allow any oil or grease to get onto the disc brake rotor and brake pads. Riding the bicycle with oil or grease on the disc brake rotor and brake pads may prevent the brakes from operating and result in serious injury due to a fall or collision.
- Check the thickness of the brake pads and do not use them if they have a thickness of 0.5 mm or less. Doing so may prevent the brakes from operating and result in serious injury due to a fall or collision.

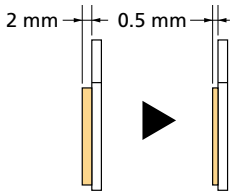

- Do not use the disc brake rotor if it is cracked or deformed. The disc brake rotor may break, and result in serious injury due to a fall or collision. Replace the disc brake rotor with a new one.

- Do not use the disc brake rotor if its thickness is 1.5 mm or less. Also do not use it if the aluminum surface becomes visible. The disc brake rotor may break, and result in serious injury due to a fall or collision. Replace the disc brake rotor with a new one.
- Do not continuously apply the brakes. Doing so may cause a sudden increase in the brake lever stroke, preventing the brakes from operating and resulting in serious injury due to a fall or collision.
- Do not use the brakes with fluid leaking. Doing so may prevent the brakes from operating and result in serious injury due to a fall or collision.
- Do not apply the front brake too strongly. If you do so, the front wheel may lock and the bicycle may fall forward, and serious injury may result.
- Because the required braking distance will be longer during wet weather, reduce your speed and apply the brakes early and gently. You may fall or collide and be seriously injured.
- A wet road surface may cause tires to lose traction; therefore, to avoid this, reduce your speed and apply the brakes early and gently. If the tires lose traction, it may result in serious injury due to a fall or collision.
- If the quick release lever is on the same side as the disc brake rotor, confirm that it does not interfere with the disc brake rotor. Otherwise, the bicycle may fall forward, and serious injury may result.

For installation to the bicycle and maintenance

- Do not use oil other than SHIMANO genuine mineral oil. Doing so may prevent the brakes from operating and result in serious injury due to a fall or collision.
- Use only mineral oil from a container that has been stored in a clean and sealed state. Doing otherwise may prevent the brakes from operating and result in serious injury due to a fall or collision.
- Do not let water or air bubbles get into the brake system. Doing so may prevent the brakes from operating and result in serious injury due to a fall or collision.
- Do not use with a tandem bicycle. Doing so may prevent the brakes from operating and result in serious injury due to a fall or collision.

■ Brake hose

- Cut the brake hose so that the cut end is perpendicular to the length of the hose. If the brake hose is cut at an angle, fluid leaks may result. Fluid leaks may prevent the brakes from operating and result in serious injury due to a fall or collision.

- Refer to the table below, and do not use an incorrect connector insert. Doing so may prevent the brakes from operating and result in serious injury due to a fall or collision.

Brake hose	Connector insert	
	Length	Color
SM-BH90	11.2 mm	Silver
SM-BH59	13.2 mm	Gold

- Do not reuse the olive piece or the connector insert when reinstalling. Doing so may prevent the brakes from operating and result in serious injury due to a fall or collision.

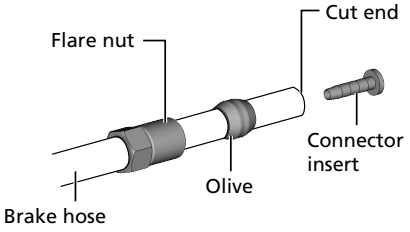

⚠ CAUTION

Be sure to also inform users of the following:

■ Cautions on SHIMANO genuine mineral oil

- Use appropriate eye protection when handling, and avoid contact with eyes. In the event of eye contact, flush with fresh water and seek medical assistance immediately. Contact with eyes may result in irritation.
- Use gloves when handling. In the event of skin contact, wash well with soapy water. Contact with skin may cause a rash and discomfort.
- Cover nose and mouth with a respirator type mask and use in a well ventilated area. Inhalation of mineral oil mist or vapors may cause nausea.
- If mineral oil mist or vapor is inhaled, go immediately to an area with fresh air. Cover up with a blanket. Stay warm and stable and seek professional medical advice.

■ Bed-in period

- Disc brakes have a bed-in period, and the braking force will gradually increase as the bed-in period progresses. You may lose control of the bicycle, which can result in serious injury due to a fall or collision.
  The same thing will happen when the brake pads or disc brake rotor are replaced.

For installation to the bicycle and maintenance

- When using the SHIMANO original tool (TL-FC36, etc.) to remove and install the disc brake rotor lock ring, wear gloves and be careful not to touch the outer edges of the disc brake rotor with your hands. Failure to do so may result in cuts to your hands.

■ Handling SHIMANO genuine mineral oil

- Do not drink. May cause vomiting or diarrhea.
- Keep out of reach of children.
- Do not cut, let near heat, weld or pressurize the SHIMANO genuine mineral oil container. Doing so may cause an explosion or fire.
- Disposal of used oil: Follow local county and/or state codes for disposal. Use caution when preparing the oil for disposal.
- Directions: Keep the container sealed to prevent foreign objects and moisture from getting inside, and store it in a cool, dark area away from direct sunlight or heat. Keep from heat or flame.

■ Brake hose

- When cutting the brake hose, handle the knife carefully so as not to cause injury.
- Be careful to avoid injury from the olive.

■ When using TL-BH62

- When cutting the brake hose, handle the knife carefully so as not to cause injury.
- Be careful to avoid pinching your fingers between the lever and the tool during operations.
- When replacing the knife blade, handle the knife carefully so as not to cause injury.
- If mineral oil adheres to the brake hose, use isopropyl alcohol to clean the hose and remove the oil.
- Keep the tool and the blades out of reach of children.

NOTICE

Be sure to also inform users of the following:

- When the bicycle wheel has been removed, it is recommended that pad spacers are installed. Do not depress the brake lever while the wheel is removed. If the brake lever is depressed without the pad spacers installed, the pistons will protrude further than normal. If that happens, consult a place of purchase.
- Use soapy water and a dry cloth when cleaning and carrying out maintenance of the brake system. Do not use commercially available brake cleaners or silencing agents. Such substances can cause damage to parts such as seals.
- In the case of carbon levers, wash them with a soft cloth using a neutral detergent. Otherwise, the material may be damaged and lose strength.
- Avoid leaving the carbon levers in areas of high temperature. Also keep them well away from fire.
- Products are not guaranteed against natural wear and deterioration from normal use and aging.
- For maximum performance we highly recommend SHIMANO lubricants and maintenance products.

For installation to the bicycle and maintenance

- The 220 mm, 203 mm, and 180 mm disc brake rotors have a larger diameter than the 160 mm disc brake rotor for cross-country bicycles, and so the warping of these disc brake rotors is greater. As a result, they may interfere with the performance of the brake pads.
- If the brake caliper mounting boss and the dropout are not parallel, the disc brake rotor and caliper may touch.
- When the bicycle wheel has been removed, it is recommended that pad spacers are installed. The pad spacers will prevent the piston from coming out if the brake lever is depressed while the wheel is removed.
- If the brake lever is depressed without the pad spacers installed, the pistons will protrude further than normal. Use a flat-shaped tool to push back the brake pad, while being careful not to damage the surface of the brake pads. (If the brake pads are not installed, use a flat-shaped tool to push the pistons straight back in, while being careful not to damage them.) When pushing back the brake pads or pistons, do so with an oil funnel attached to the brake lever. Otherwise, the diaphragm of the brake lever may be damaged by the oil pressure.
- For cleaning brake hoses exposed to mineral oil, or cleaning and maintaining tools, use isopropyl alcohol or a dry cloth. Do not use commercially available brake cleaners. Doing so may cause damage to plastic parts.
- Do not remove the pistons when cleaning the calipers.
- If the disc brake rotor is worn, cracked or warped, it should be replaced.

The actual product may differ from the illustration because this manual is intended mainly to explain the procedures for using the product.

List of tools to be used

The following tools are needed for installation/removal, adjustment, and maintenance purposes.

Tool	
2	2 mm hexagon wrench
2.5	2.5 mm hexagon wrench
3	3 mm hexagon wrench
4	4 mm hexagon wrench
5	5 mm hexagon wrench
8	8 mm spanner
7	7 mm box wrench
	Adjustable wrench
TL-BH62	TL-BH62
TL-FC36	TL-FC36
TL-LR15	TL-LR15
TL-BR001	TL-BR001 (syringe and tube)
TL-BR003	TL-BR003 (oil funnel and oil stopper)
	Micrometer

Installation/removal

Installing the brake lever

For the installation method when installing with an I-SPEC type shifter, refer to the dealer's manual of the shifter being used.
When installing parts onto a carbon frame/handlebar, confirm the recommended tightening torque with the carbon frame or handlebar manufacturer. This will prevent damage to the frame/handlebar due to over-torquing or inadequate securing of the components.

1. **Open the clamp band of the brake lever.**

   (1) Loosen the fixing screw.

   (2) Press the recessed area of the clamp band with a tool such as a 2 mm hexagon wrench to disengage the safety latch.

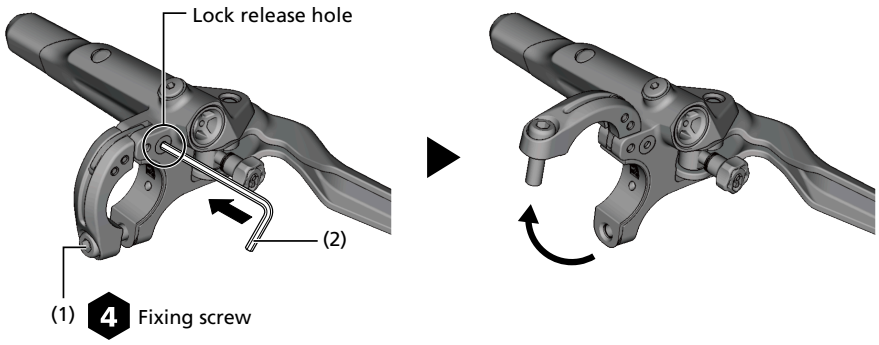

2. **Attach the brake lever to the handlebar.**
   If an I-SPEC type shifter is not being used, be sure to use a band adapter.

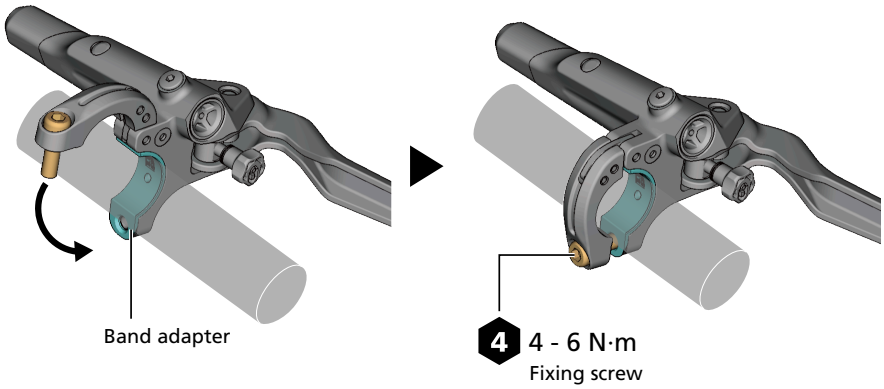

NOTICE

- The band adapter should only be removed when combining with an I-SPEC type shifter. For the combining method, refer to the dealer's manual of the shifter being used.

Installing the disc brake rotor

1. **Check that the spokes are laced as shown in the figure.**
   Radial lacing cannot be used.

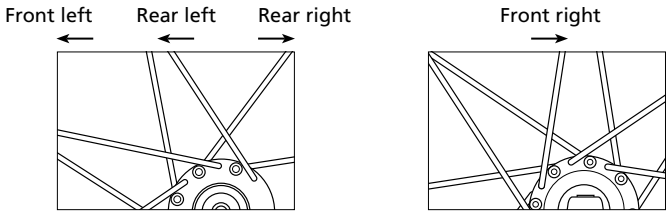

2. **Set the disc brake rotor on to the hub, then secure it with the disc brake rotor lock ring.**

   Secure with TL-LR15 and an adjustable wrench or TL-FC36.

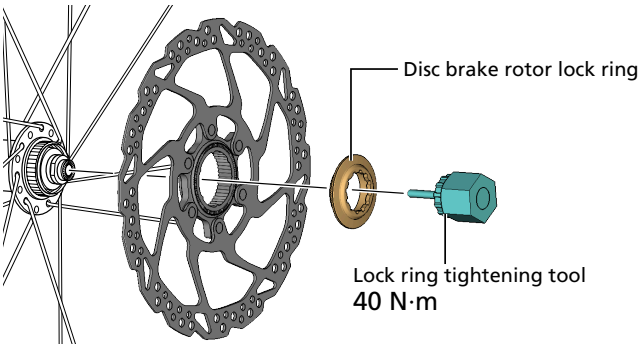

	Internal spline type	External spline type
Disc brake rotor lock ring	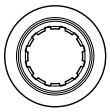	
Lock ring tightening tool	TL-LR15 and adjustable wrench	TL-FC36

Removing the disc brake rotor

Perform the removal of the disc brake rotor in the reverse order from the installation procedure.

Installing the brake calipers

Post mount type

1. **Install the wheel with an attached disc brake rotor onto the frame.**

2. Remove the bleed spacer (yellow).

(1) Remove the retaining clip.

(2) Remove the pad axle.

(3) Remove the bleed spacer (yellow).

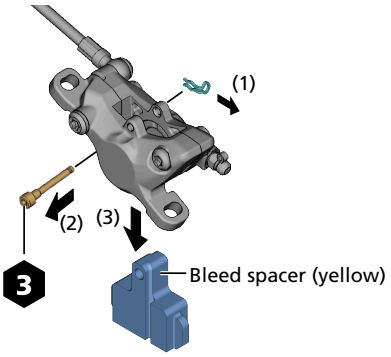

3. Set the brake pad presser spring in the brake pads.

Set the pads as shown in the figure.

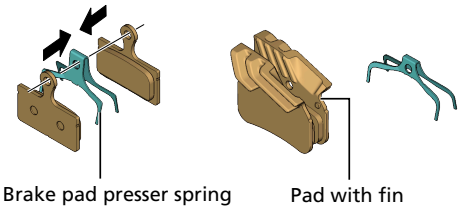

4. Install the brake pads.

(1) Set the brake pads in the caliper.

(2) Install the pad axle.

(3) Install the retaining clip.

(4) Install the pad spacer (red).

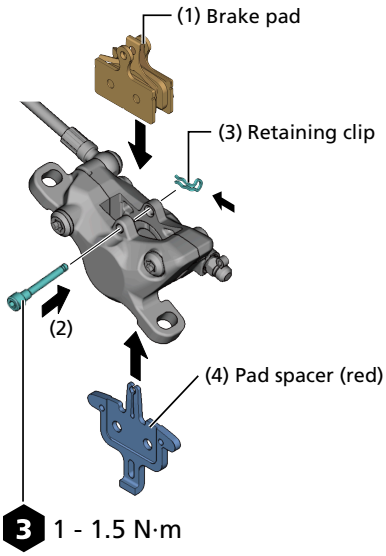

NOTICE

- Some brake pads have left (L) and right (R). Take note of this when setting them in the caliper.

5. Depress the brake lever a few times and make sure that the lever operation becomes stiff.

6. Remove the pad spacer (red).

7. **Temporarily install the caliper on the frame without fully tightening the mounting screws so that the caliper can still move horizontally.**

   Perform temporary installation until the caliper can only move a slight amount left and right.

   If it is necessary to install a mount adapter, temporarily install the adapter after setting it on the caliper. Set the adapter so that the mark is facing up.

   Without mount adapter

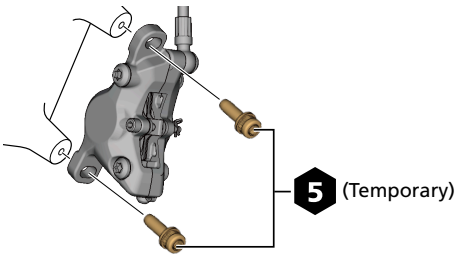

   With mount adapter

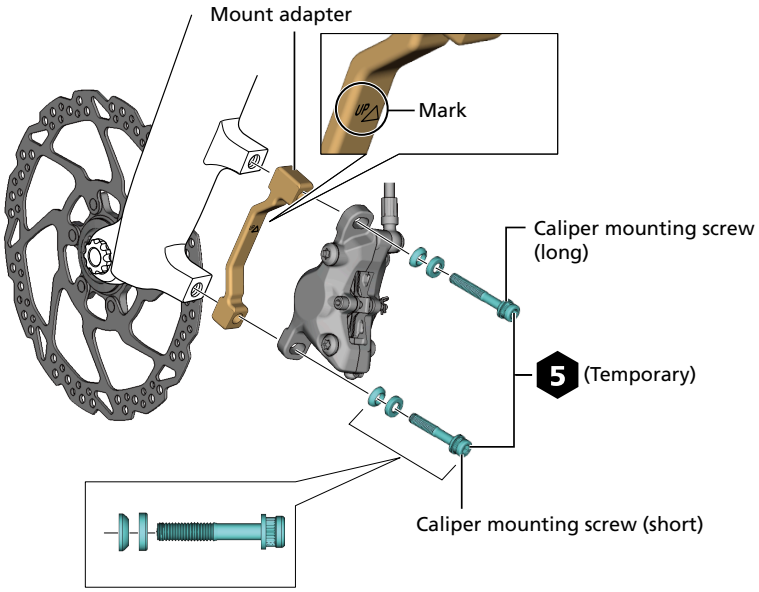

8. **Depress the brake lever so that the disc brake rotor is held between the pads, then tighten the caliper mounting screws.**

   If the brake hose is not already installed in the caliper, install the brake hose then perform the step.

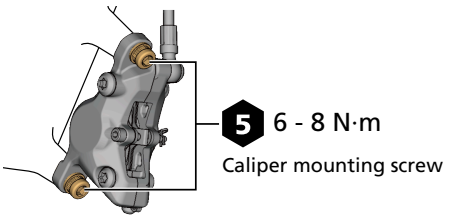

9. Secure the caliper mounting screws.

In order to prevent the screw from loosening, install a snap ring on the head of the screw.

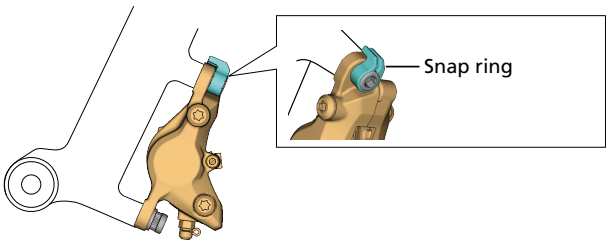

NOTICE

- Use the supplied snap rings. Other models of snap rings cannot be installed.

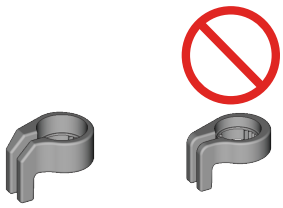

International-standard mount type

NOTICE

- For international-standard mounts, a dedicated adapter is required.

1. Install the wheel with an attached disc brake rotor onto the frame.

2. Remove the bleed spacer (yellow).

(1) Remove the retaining clip.

(2) Remove the pad axle.

(3) Remove the bleed spacer (yellow).

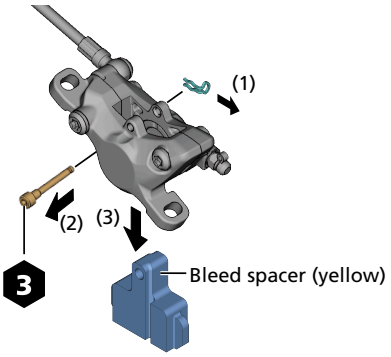

3. Set the brake pad presser spring in the brake pads.

Set the pads as shown in the figure.

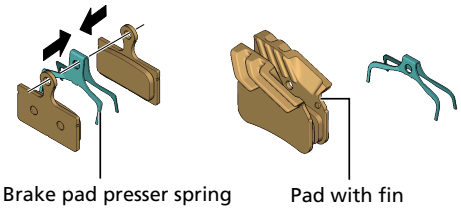

4. Install the brake pads.

(1) Set the brake pads in the caliper.

(2) Install the pad axle.

(3) Install the retaining clip.

(4) Install the pad spacer (red).

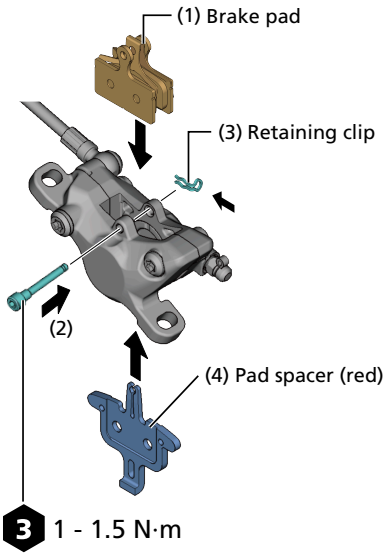

NOTICE

- Some brake pads have left (L) and right (R). Take note of this when setting them in the caliper.

5. Depress the brake lever a few times and make sure that the lever operation becomes stiff.

6. Remove the pad spacer (red).

7. Temporarily install the caliper on the adapter, then install it onto the frame.

Tighten with the adapter mounting screws. Perform temporary installation until the caliper can only move a slight amount left and right.

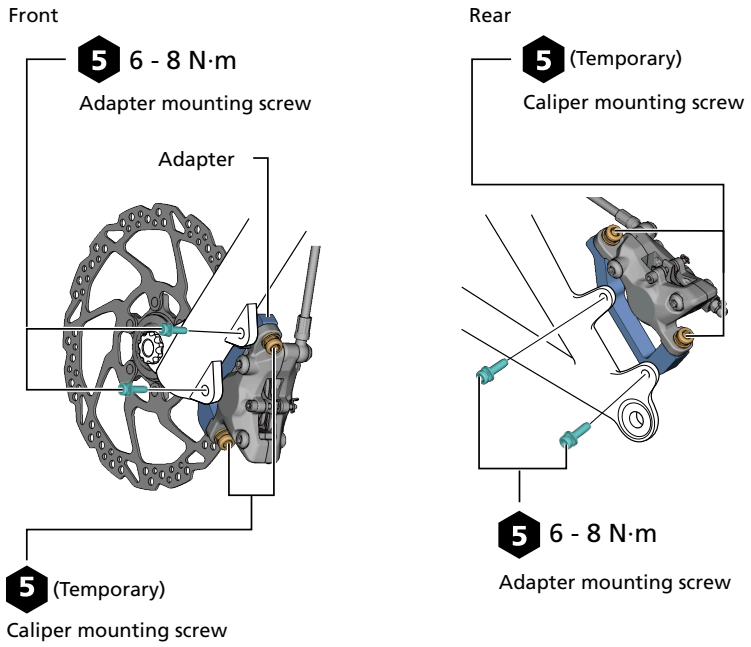

8. Depress the brake lever so that the disc brake rotor is held between the pads, then tighten the caliper mounting screws.

If the brake hose is not already installed in the caliper, install the brake hose then perform the step.

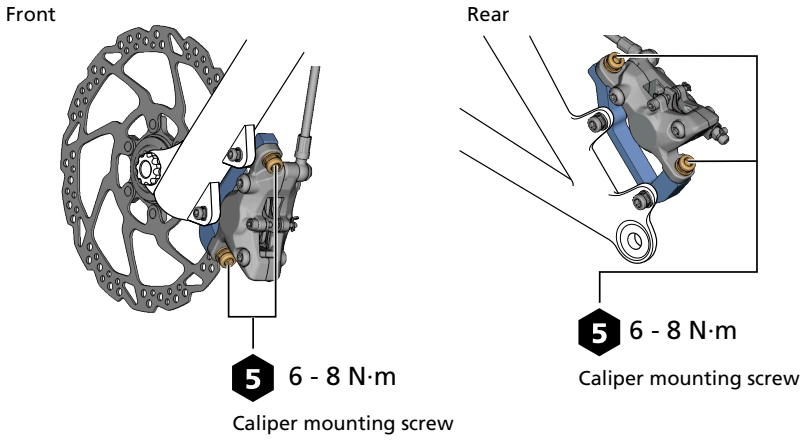

9. Secure the caliper mounting screws.

In order to prevent the screws from loosening, secure the caliper mounting screws and adapter mounting screws with snap rings.

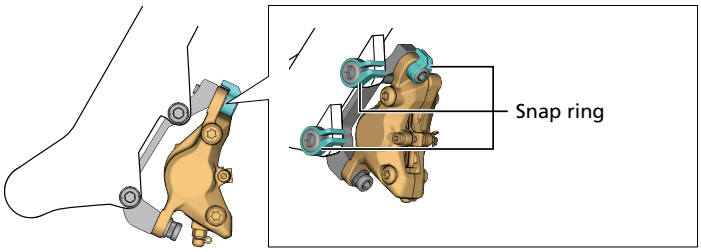

NOTICE

- Use the supplied snap rings. Other models of snap rings cannot be installed.

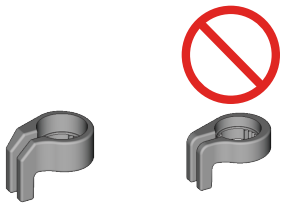

Installing the brake hose

Overview of the easy hose joint system

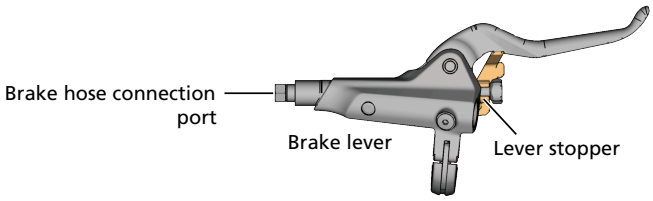

Checking the length of the hose

1. **Route the brake hose into the final installation position.**

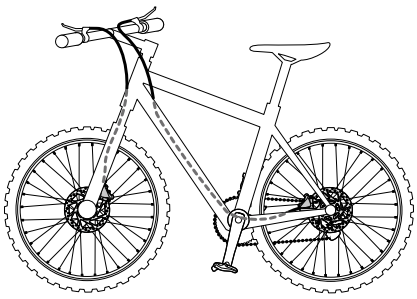

NOTICE

- This figure is only for explanatory purposes. For details on how to route the brake hoses, consult the manufacturer of the bicycle or refer to the bicycle's manual.

2. Check the appropriate length of the brake hose.

Secure the brake lever in the position used when riding.

Check the mark on the brake hose with the edge of the brake lever flare nut.

* If the hose is at the appropriate length, it is not necessary to cut the hose. Proceed to the " Connecting the hose " section in "Installing the brake hose."
* If the hose needs to be shortened, proceed to " Cutting the hose " in "Installing the brake hose."
* If the hose length is insufficient, replace with a hose that has an appropriate length. Proceed to " Replacing the brake hose ."

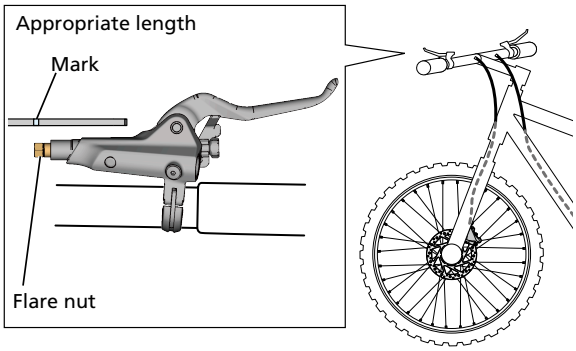

Cutting the hose

Use care when cutting the hose, as oil may leak when the hose is cut.

NOTICE

- Make sure to also refer to the manual for SHIMANO original tool TL-BH62.
- Do not move the lever indicated in the figure before disassembling SHIMANO original tool TL-BH62.

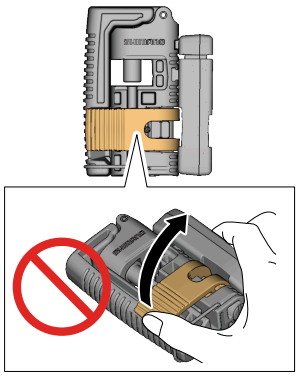

1. **Determine the appropriate length and add a witness mark on the brake hose.**

   Add the mark so it is aligned with the edge of the flare nut.

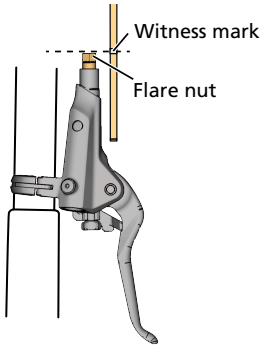

2. **Add a cut mark.**

   Add a cut mark 18 mm towards the end of the hose from the witness mark.

   * When not using an easy hose joint system, add a cut mark 11 mm towards the end of the hose from the witness mark.

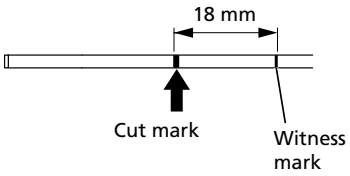

3. Prepare tool TL-BH62 for the cutting of the brake hose.

Disassemble the tool as shown in the figure.

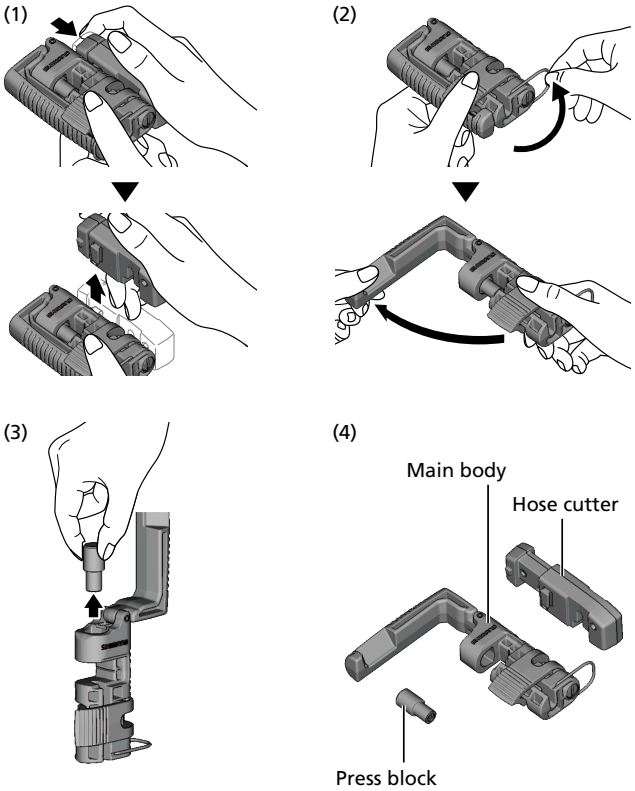

4. Insert the brake hose into the TL-BH62.

When inserting the brake hose, make sure that the cut mark is parallel with the indicator groove in the tool.

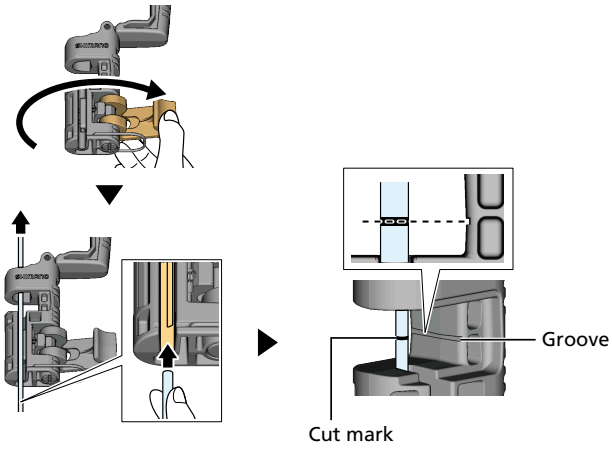

5. **Check the cut location and secure the brake hose in place.**

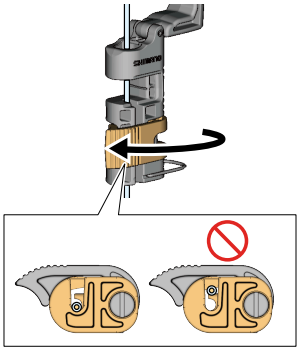

6. **Check that the hose is secure, then install the hose cutter.**

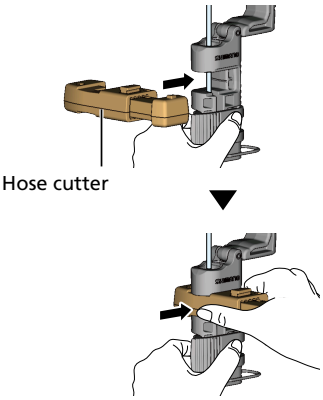

7. **Press the hose cutter as shown in the figure to cut the brake hose.**

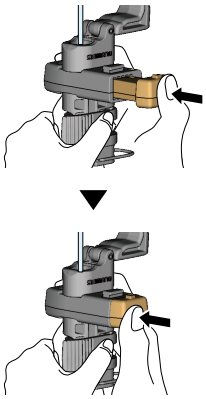

8. **Remove the hose cutter and check that the cut end is even.**

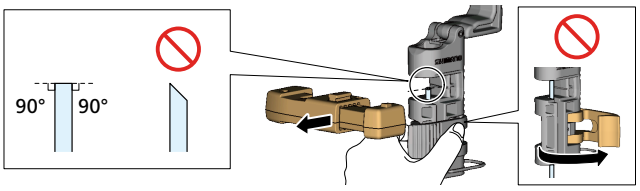

9. Install the connector insert in the press block, then set the press block in the TL-BH62.

Make sure that the tip of the connector insert is correctly positioned inside the opening of the brake hose.

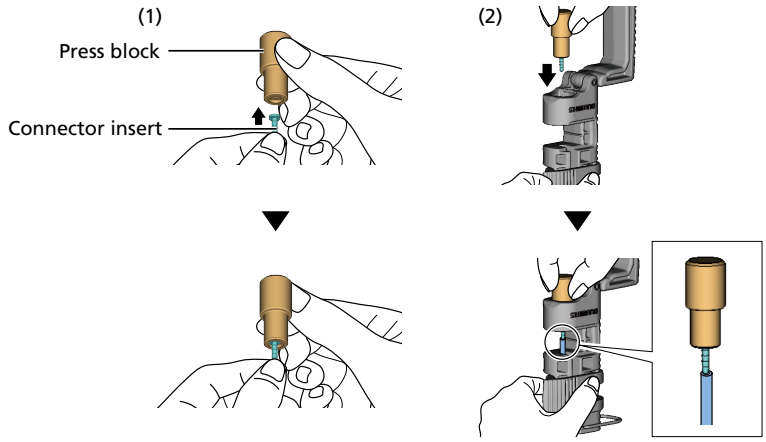

NOTICE

- When connecting with an easy hose joint system, a specific Connector Insert (SHIMANO CODE No.: Y8JA98020/color: silver) must be used. Use of any connector insert other than the specified one may lead to oil leakage and other malfunctions.

10. Depress the lever on the TL-BH62 to install the connector insert in the brake hose.

Check that the connector insert is installed correctly.

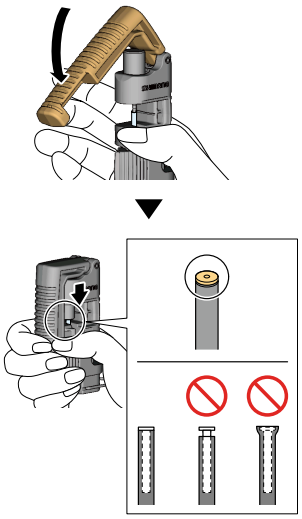

11. Remove the brake hose from the TL-BH62.

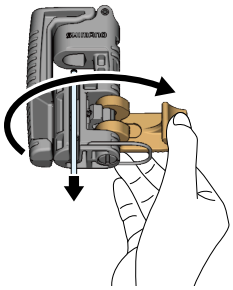

Connecting the hose

1. Pass the hose cover over the brake hose.

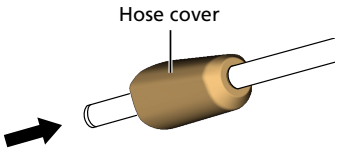

2. Set the hose connection port of the brake lever so that it is facing upward.

Secure it by adjusting the angle of the handlebar, or other means.

Perform this task with the brake caliper removed from the frame as needed.

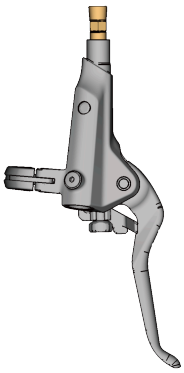

3. **Remove the seal plug.**

   Use a clean rag to keep oil from dripping off the seal plug.

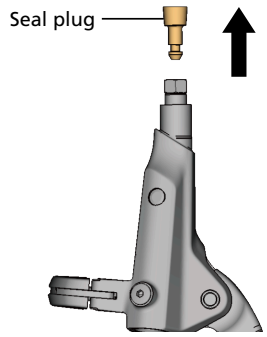

4. **Insert the brake hose in the brake hose connection port.**

   The lever comes with a pre-installed olive. When inserting the hose, ensure it does not snag on the olive.

   Insert the hose up to the witness mark on the outer hose casing.

   Cover with a clean rag while conducting this procedure as some of the internal oil may leak.

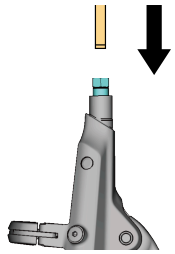

5. **Tighten the flare nut.**

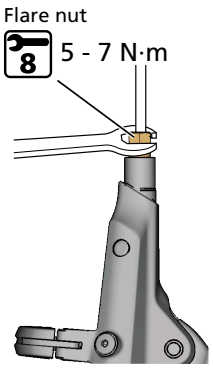

6. **Wipe off any residual oil and install the hose cover.**

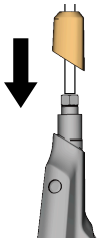

7. **Remove the lever stopper from the brake lever.**
   Pull out the lever stopper by means of short back and forth movements while taking care not to depress the brake lever.

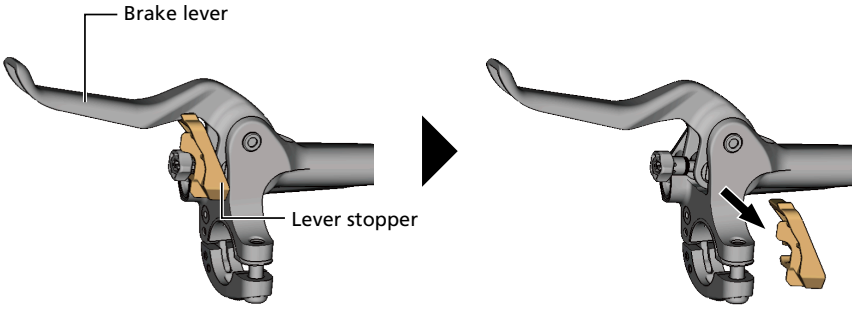

8. **Check that the pad spacer is installed in the caliper.**

9. **Operate the brake lever several times. Check that the brake pads grip the pad spacer and that the lever becomes stiff.**
   If the lever does not become stiff, refer to " Adding SHIMANO genuine mineral oil and bleeding air " and bleed the air from the system.

Adjustment

Adjusting the reach

1. **Turn the reach adjustment knob to adjust the reach.**
   Tightening the reach adjustment knob (clockwise) widens the distance between the initial position of the brake lever and the handlebar, while loosening the knob (counterclockwise) narrows it.

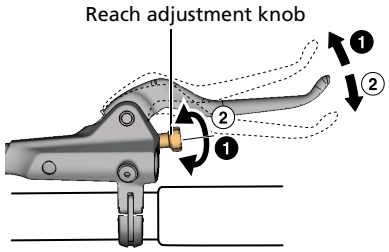

Maintenance

Replacing the brake pads

Replace the brake pads in the following circumstances:

- When oil adheres to the brake pads
- When the brake pads are worn down to a thickness of 0.5 mm
- When the brake pad presser spring is interfering with the disc brake rotor

1. **Remove the wheel from the frame.**

2. **Remove the brake pads.**

   (1) Remove the retaining clip.

   (2) Remove the pad axle.

   (3) Remove the brake pads from the caliper.

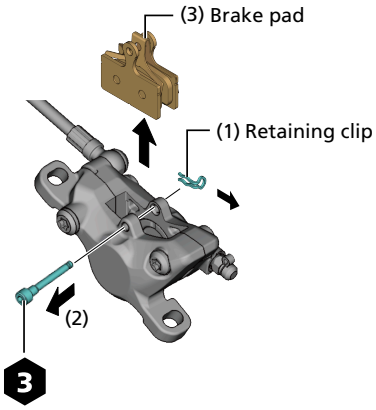

3. **Clean the pistons and the surrounding area.**

4. Push the pistons straight back as far as they will go.

This brake system is designed to automatically adjust the gap between the disc brake rotor and the brake pads by the pistons gradually protruding in relation to the wear of the brake pads. As a result, when the brake pads are replaced, the pistons need to be pushed back into position.

Use a flat-shaped tool to push the pistons back while being careful not to twist them.

Do not push the pistons with a sharp tool. Doing so may damage the pistons.

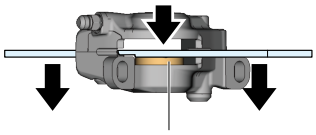

NOTICE

- When pushing the pistons back, do so with the oil funnel attached to the brake lever. Otherwise, the diaphragm of the brake lever may be damaged by the oil pressure.

5. Set a brake pad presser spring in the new brake pads.

Set the pads as shown in the figure.

Some brake pads have left (L) and right (R). Take note of this when setting them in the caliper.

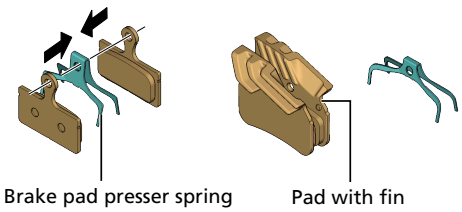

6. Install the brake pads.

(1) Set the brake pads in the caliper.

(2) Install the pad axle.

(3) Install the retaining clip.

(4) Install the pad spacer (red).

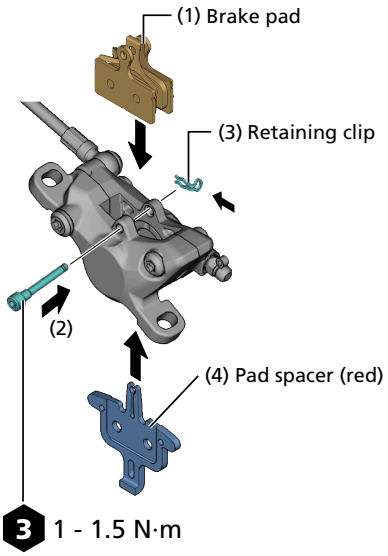

7. Depress the brake lever a few times and make sure that the lever operation becomes stiff.

8. Remove the pad spacer (red) and install the wheel.

9. **Check that the disc brake rotor does not interfere with the brake pads.**
   If there is interference, check if the wheel is installed correctly. If there is no problem with the installation of the wheel, refer to " Installing the brake calipers " and adjust the position of the caliper.

NOTICE

- To optimize the performance of the brake pads and disc brake rotor after replacing the brake pads, perform the bed-in procedure as explained in the steps below:

  (1) Ride your bicycle in a flat and safe area without obstacles and accelerate to a moderate speed.

  (2) Operate the brake lever until you slow down to walking speed.
  Do this only with one brake lever at a time. Be careful when performing this procedure.
  Always operate your brake lever with moderation, especially when you bed in the front brake.

  (3) Repeat steps (1) and (2) for at least 20 times for both the front and rear brakes.
  While repeating the process, the brake force will increase.

SHIMANO genuine mineral oil replacement

It is recommended to change the oil when it becomes noticeably discolored.

Draining the mineral oil

⚠ CAUTION

- Note the following cautions when handling SHIMANO genuine mineral oil:
  - Do not drink. May cause vomiting or diarrhea.
  - Keep out of reach of children.
  - Do not cut, let near heat, weld or pressurize the SHIMANO genuine mineral oil container. Doing so may cause an explosion or fire.
  - Disposal of used oil: Follow local county and/or state codes for disposal.
  - Directions: Keep the container sealed to prevent foreign objects and moisture from getting inside, and store it in a cool, dark area away from direct sunlight or heat. Keep from heat or flame.

1. **Position the bicycle as shown in the figure.**

   Install a bleed spacer (yellow) to the caliper and secure the bicycle with a stand, etc.

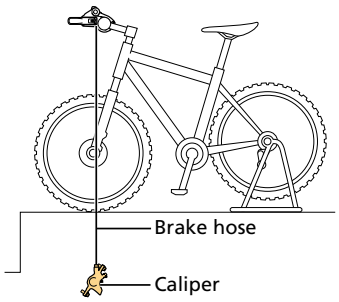

2. **Set the brake lever so that it is parallel to the ground.**

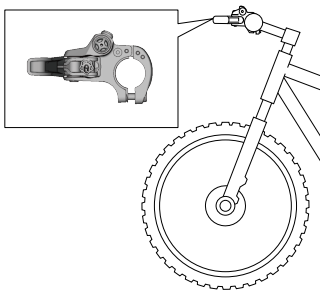

3. **Remove the bleed screw and O-ring.**

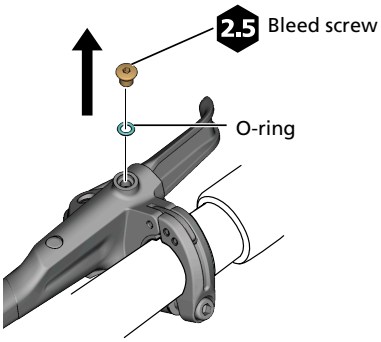

4. Install a bag and tube on the bleed nipple.

(1) Remove the bleed nipple cap.

(2) Place a 7 mm box wrench in the position shown in the figure.

(3) Connect the tube with bag attached to the bleed nipple.

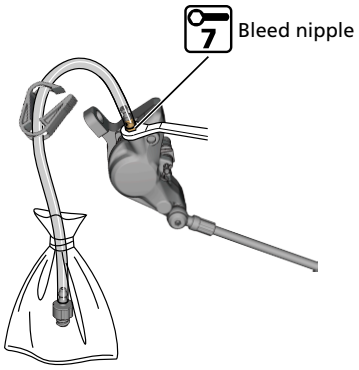

5. Loosen the bleed nipple.

The oil will begin to drain. Operating the brake lever while the oil drains will allow the oil to drain more quickly.

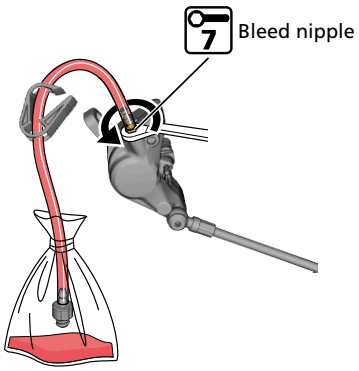

Adding SHIMANO genuine mineral oil and bleeding air

When adding oil, use only SHIMANO genuine mineral oil.

NOTICE

- When bleeding air you will need the TL-BR001 and TL-BR003 SHIMANO original bleed tools.

1. **Position the bicycle as shown in the figure.**

   Install a bleed spacer (yellow) to the caliper and secure the bicycle with a stand, etc.

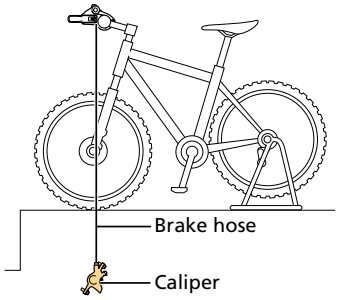

2. **Set the brake lever so that it is parallel to the ground.**

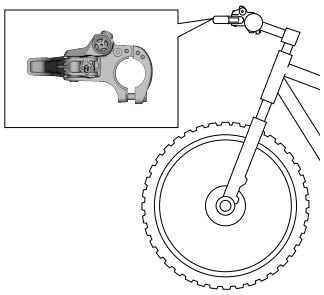

3. **Remove the bleed screw and O-ring, and insert the oil funnel.**

   Do not insert the oil stopper.

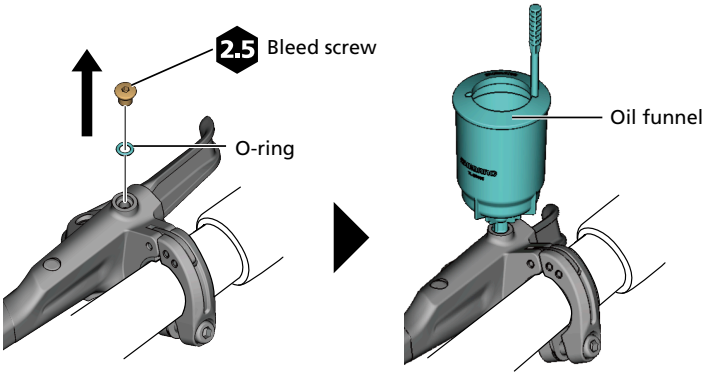

4. Add the oil through the bleed nipple.

Do not depress the brake lever while adding oil. Doing so may introduce air bubbles into the system. If the lever was depressed, drain the oil and re-start the process.

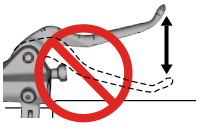

(1) Remove the bleed nipple cap.

(2) Place a 7 mm box wrench in the position shown in the figure.

(3) Fill a syringe with oil, then connect the tube to the bleed nipple.

(4) Loosen the bleed nipple by 1/4 of a turn.

(5) Push the piston of the syringe to add the oil.

(6) Oil will start to come out from the oil funnel. Continue adding the oil until there are no more air bubbles in the oil that is coming out.

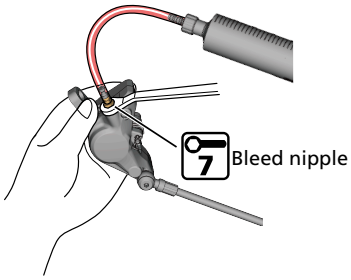

TECH TIPS

- If possible, secure the brake caliper body to prevent the tube from being accidentally disconnected.

5. Once there are no more air bubbles mixed in with the oil, temporarily tighten the bleed nipple.

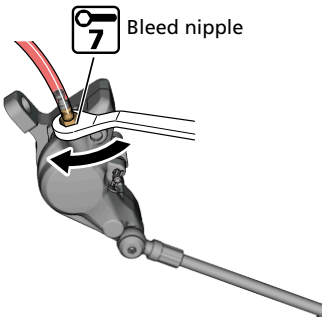

6. Bleed the air.

Most of the air bubbles remaining inside the brake system can be bled by performing the following operation:

(1) Place a 7 mm box wrench in the position shown in the figure.

(2) Connect the tube with bag attached to the bleed nipple.

(3) Loosen the bleed nipple.

(4) After a little while, the oil and air bubbles will flow naturally from the bleed nipple into the tube.

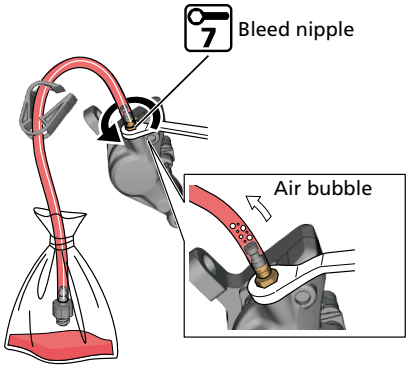

TECH TIPS

- It may help to gently shake the hose or lightly tap the reservoir tank or caliper with a non-marring screwdriver handle. Changing the caliper position may also improve results.

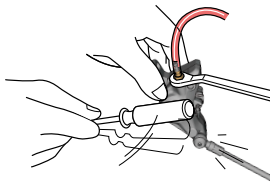

7. As the oil level drops in the oil funnel, add oil to maintain the oil level and prevent air from getting into the system.

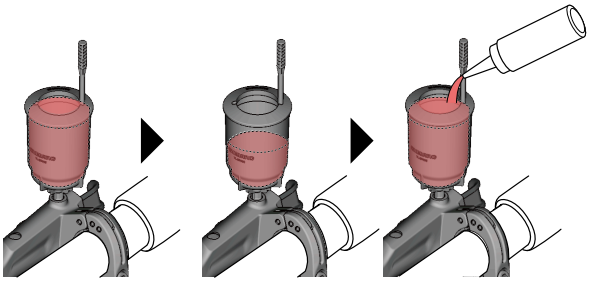

8. Once no more air bubbles come out from the bleed nipple, temporarily tighten the bleed nipple.

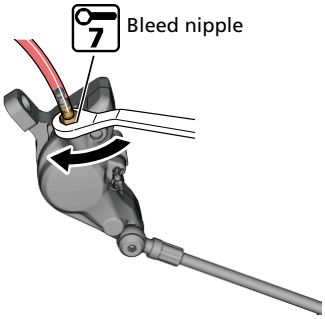

9. With the brake lever depressed, loosen and tighten the bleed nipple in rapid succession.

Loosen and tighten for approximately 0.5 seconds each time to release any air bubbles inside the caliper.

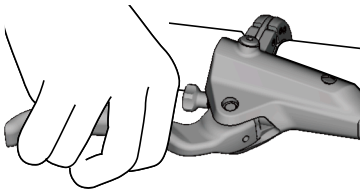

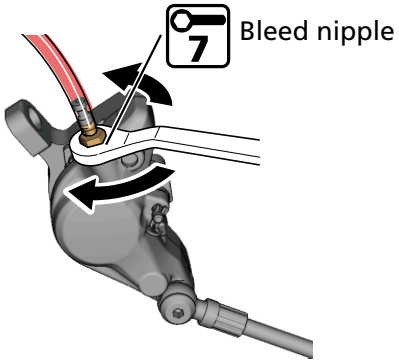

10. Repeat step 9 two to three times, then tighten the bleed nipple.

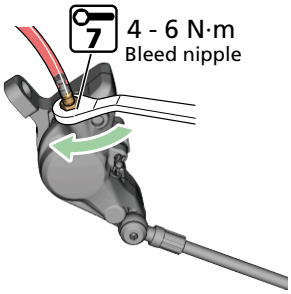

11. Wipe away any oil from the area around the bleed nipple, and attach the bleed nipple cap.

12. Operate the brake lever.

Air bubbles in the system rise up through the port into the oil funnel. Continue operating the brake lever until no more bubbles appear.

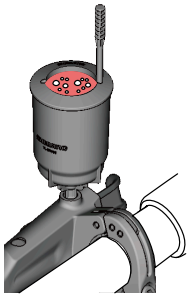

13. Check that the lever has become stiff.

If the lever does not become stiff, repeat the procedures from step 6 .

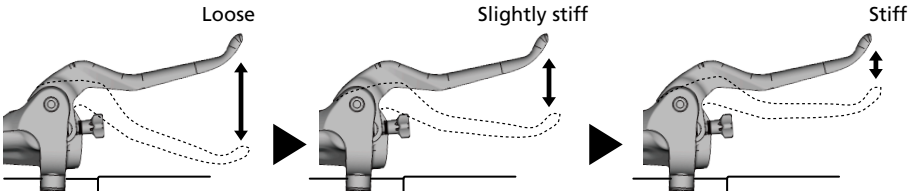

14. Tilt the brake lever upwards 30° from the ground and repeat step 12 **.**

Check that there are no remaining air bubbles.

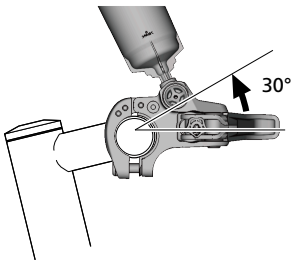

15. Tilt the brake lever downwards 30° from the ground and repeat step 12 **.**

Check that there are no remaining air bubbles.

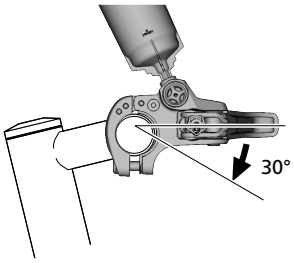

16. Set the brake lever so that it is parallel to the ground.

17. Plug the oil funnel with the oil stopper.

Make sure that the side of the oil stopper with the O-ring attached is facing downward.

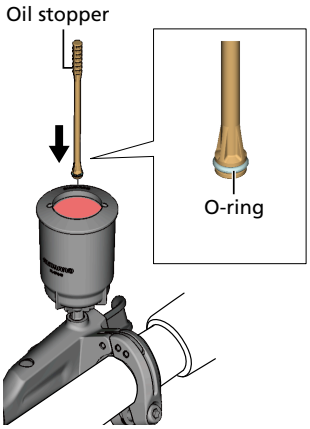

18. Remove the oil funnel with the oil stopper still in place.

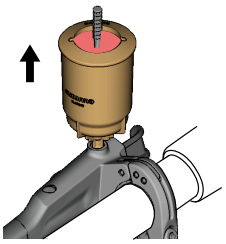

19. Install a bleed screw with O-ring.

Tighten until oil flows out to make sure that no air bubbles remain inside the reservoir tank.

Do not operate the brake lever. If operated, there is a risk of air bubbles entering the cylinder.

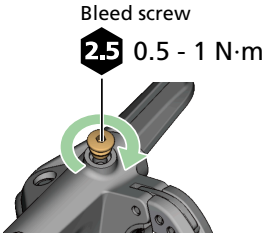

20. Wipe away any oil that has overflowed.

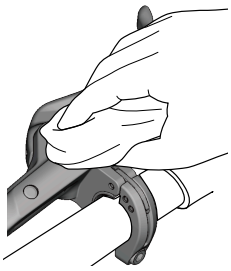

21. Remove the bleed spacer (yellow).

Refer to " Installing the brake calipers " to perform the procedure.

22. Install the brake pads.

Refer to step 6 and step 7 of "Replacing the brake pads" to perform the procedure.

Replacing the brake hose

After replacing the brake hose, refer to " SHIMANO genuine mineral oil replacement " to inject the mineral oil and bleed the air from the system.

Checking the hose length and cutting the hose

1. Route the brake hose into the final installation position.

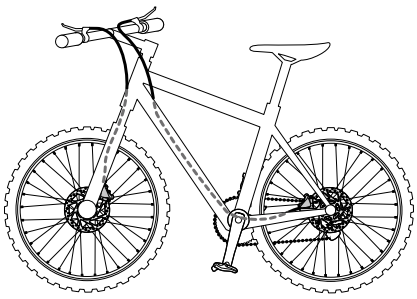

2. **After determining the appropriate length, add a witness mark on the brake hose as shown in the figure.**
   Make sure the witness mark is added to the brake lever side.

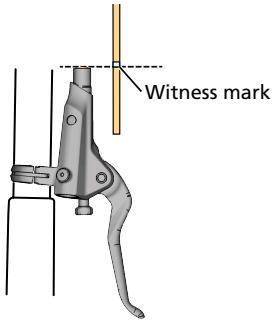

3. **Cut the brake hose.**
   Refer to " Cutting the hose " in "Installing the brake hose."

Assembly to the brake lever

1. **Pass the cover, flare nut, and olive over the brake hose in the order shown below.**

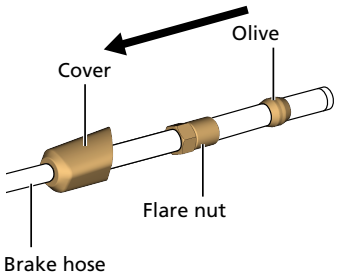

2. **Check that the olive is in the position shown in the figure, then apply Premium Grease to the threads of the flare nut and outer surface of the olive.**

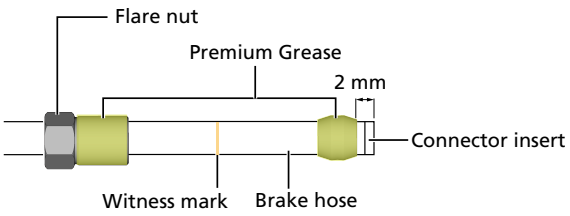

3. **Install the brake hose in the brake lever.**

   Insert the hose up to the witness mark on the outer hose casing.

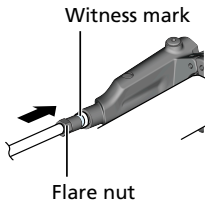

4. **Tighten the flare nut while pushing the brake hose in.**

   After tightening, install the cover.

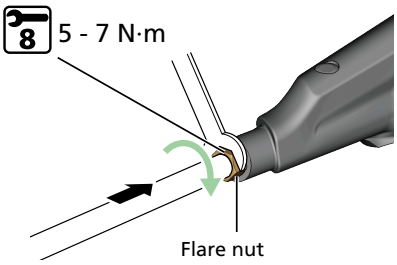

5. **Install the cover.**

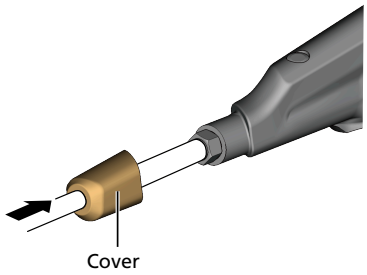

Assembly to the brake caliper

1. **Install the brake hose on the caliper as shown in the figure.**

BR-U8020

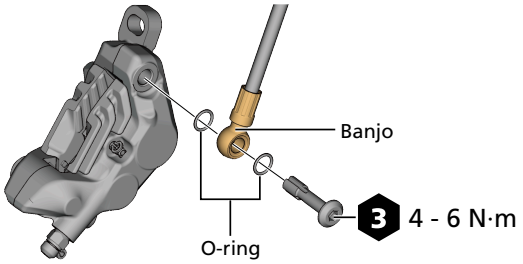

BR-U8000

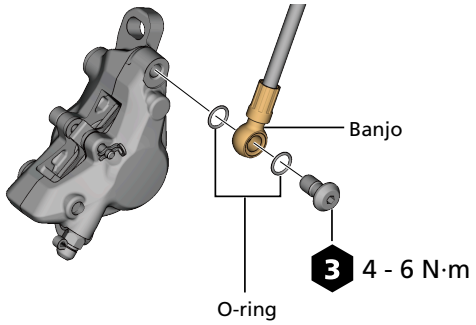

Caliper piston maintenance

The caliper includes pistons. Adjust the pistons with the following procedure if these pistons do not operate properly, if they protrude unevenly, or if the brake pads remain in contact with the disc brake rotor.

1. **Remove the wheel from the frame.**

2. Remove the brake pads.

(1) Remove the retaining clip.

(2) Remove the pad axle.

(3) Remove the brake pads from the caliper.

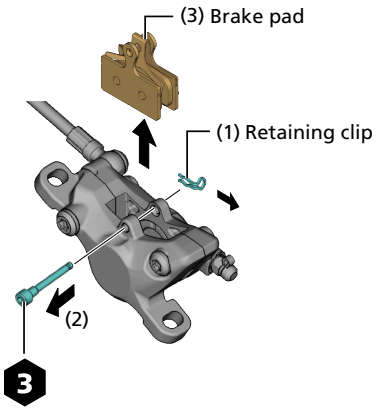

3. Clean the pistons and the surrounding area.

4. Push the pistons straight back as far as they will go.

Use a flat-shaped tool to push the pistons back while being careful not to twist them.

Do not push the pistons with a sharp tool. Doing so may damage the pistons.

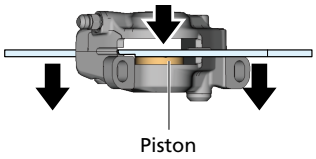

NOTICE

- When pushing the pistons back, do so with the oil funnel attached to the brake lever. Otherwise, the diaphragm of the brake lever may be damaged by the oil pressure.

5. **Install the brake pads.**

   (1) Set the brake pads in the caliper.

   (2) Install the pad axle.

   (3) Install the retaining clip.

   (4) Install the pad spacer (red).

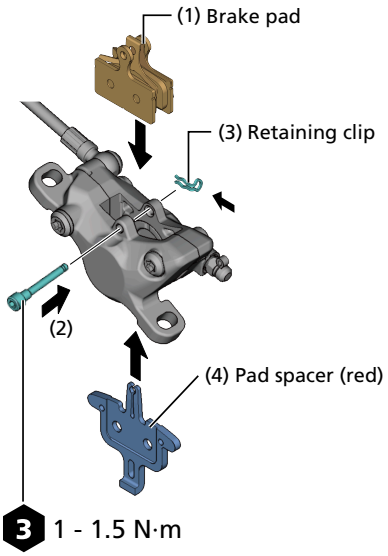

6. **Depress the lever a few times and make sure pistons protrude evenly.**
   If the pistons do not protrude evenly, repeat steps 2 to 6 .

7. **Remove the pad spacer (red) and install the wheel.**

8. **Check that the disc brake rotor does not interfere with the brake pads.**
   If there is interference, loosen the mounting screw and adjust until there is no more interference.

Replacing the diaphragm

After replacing the diaphragm, refer to " SHIMANO genuine mineral oil replacement " to inject the mineral oil and bleed the air from the system.

1. **Drain the mineral oil.**
   Refer to the " Draining the mineral oil " section to perform the procedure.

2. **Loosen the cap fixing screw.**

   You may need to pull the lever to access the cap fixing screw. Loosen until one or two threads start to be seen. Do not completely remove the cap fixing screw.

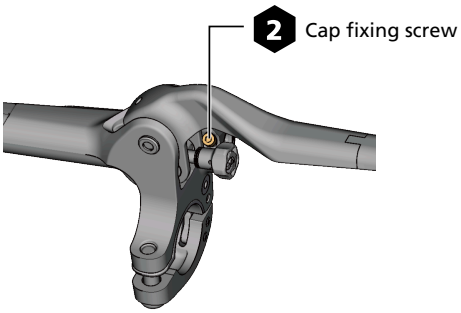

3. **Remove the bleed screw and O-ring.**

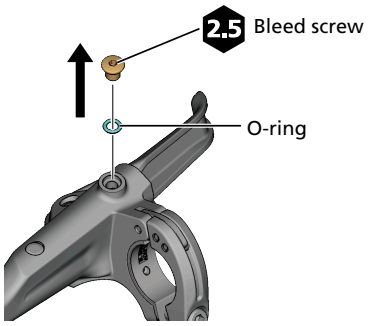

4. **Push the cap and diaphragm out.**

   Insert a thin screwdriver or hexagon wrench into the hole where the bleed screw was removed, and push out the diaphragm.

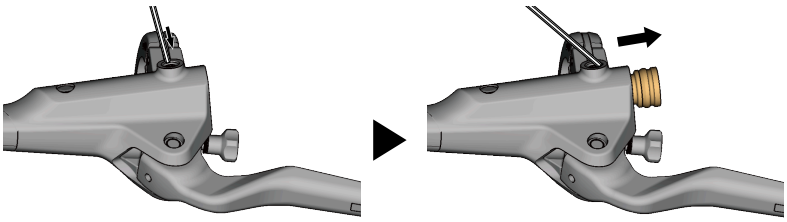

5. **Pull the cap and diaphragm out.**

   Grasp the exposed cap and diaphragm, and pull them out.

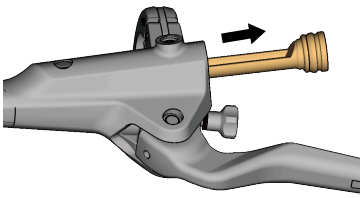

6. **Remove the cap from the diaphragm.**

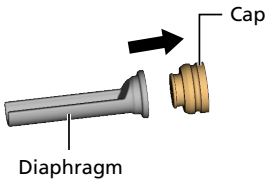

7. **Attach the cap to a new diaphragm.**

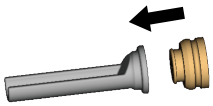

8. **Insert the diaphragm into the brake lever body.**

   Make sure that the diaphragm is facing the direction indicated in the figure when inserting it.

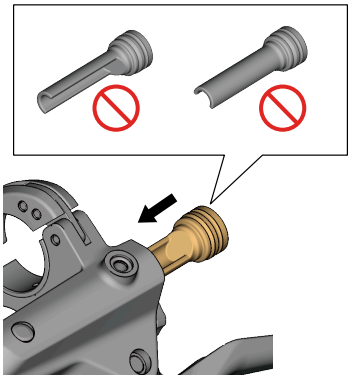

NOTICE

- After inserting the diaphragm, confirm that the outside surface of the diaphragm cannot be seen from the hole of the bleed screw.

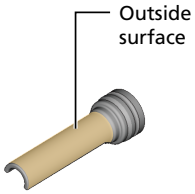

9. Tighten the cap fixing screw.

You may need to pull the lever to access the cap fixing screw. Tighten while pushing the cap in so that there is no gap between the cap and the brake lever body. Be careful not to tighten excessively.

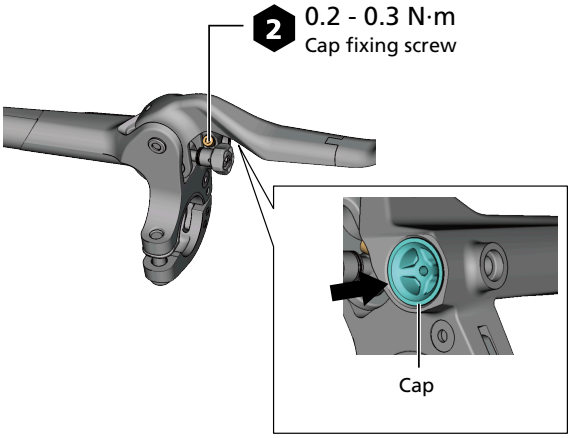

SHIMANO

SHIMANO NORTH AMERICA BICYCLE, INC.
One Holland, Irvine, California 92618, U.S.A. Phone: +1-949-951-5003

SHIMANO EUROPE B.V.
High Tech Campus 92, 5656 AG Eindhoven, The Netherlands Phone: +31-402-612222

SHIMANO INC.
3-77 Oimatsu-cho, Sakai-ku, Sakai City, Osaka 590-8577, Japan

Please note: specifications are subject to change for improvement without notice. (English)
© Jun. 2023 by SHIMANO INC. ITP