Dealer's Manual

ROAD	MTB	Trekking
City Touring/ Comfort Bike	URBAN SPORT	E-BIKE

SHIMANO Nexus

NEXUS

SG-C7050-5V
SG-C7050-5R
SG-C7050-5D
SG-C7050-5C
SM-C7050
CS-C7000
MU-UR520
MU-UR510
MU-UR500

CONTENTS

IMPORTANT NOTICE 3

TO ENSURE SAFETY 4

LIST OF TOOLS TO BE USED 13

INSTALLATION 15

Installation of sprocket to the hub 15

Installation of the motor unit to the hub 16

Installation of the disc brake rotor 19

Installation of the hub to the frame 19

CONNECTION OF THE ELECTRIC WIRES 25

Connection to motor unit 25

Disconnection of the electric wires 28

CONNECTION AND COMMUNICATION WITH DEVICES 30

Wireless function (MU-UR520) 30

Pairing for wireless gear shifting (MU-UR520) 30

MAINTENANCE 33

Adjusting the motor unit 33

Oil maintenance of the internal assembly (oil maintenance kit: Y00298010) 35

IMPORTANT NOTICE

- **This dealer's manual is intended primarily for use by professional bicycle mechanics.**
  Users who are not professionally trained for bicycle assembly should not attempt to install the components themselves using the dealer's manuals.
  If any part of the information on the manual is unclear to you, do not proceed with the installation. Instead, contact your place of purchase or a local bicycle dealer for their assistance.
- Make sure to read all instruction manuals included with the product.
- Do not disassemble or modify the product other than as stated in the information contained in this dealer's manual.
- All manuals and technical documents are accessible online at https://si.shimano.com.
- For consumers who do not have easy access to the internet, please contact a SHIMANO distributor or any of the SHIMANO offices to obtain a hardcopy of the User's Manual.
- Please observe the appropriate rules and regulations of the country, state or region in which you conduct your business as a dealer.
- The Bluetooth® word mark and logos are registered trademarks owned by the Bluetooth SIG, Inc. and any use of such marks by SHIMANO INC. is under license.
  Other trademarks and trade names are those of their respective owners.
- ANT® and ANT+® are trademarks or registered trademarks of ANT Wireless.

For safety, be sure to read this dealer's manual thoroughly before use, and follow it for correct use.

The following instructions must be observed at all times in order to prevent personal injury and physical damage to equipment and surroundings.
The instructions are classified according to the degree of danger or damage which may occur if the product is used incorrectly.

⚠ DANGER

Failure to follow the instructions will result in death or serious injury.

⚠ WARNING

Failure to follow the instructions could result in death or serious injury.

⚠ CAUTION

Failure to follow the instructions could cause personal injury or physical damage to equipment and surroundings.

TO ENSURE SAFETY

⚠ WARNING

- **Be sure to follow the instructions provided in the manuals when installing the product.**
  Only use SHIMANO genuine parts. If a component or replacement part is incorrectly assembled or adjusted, it can lead to component failure and cause the rider to lose control and crash.
- Wear approved eye protection while performing maintenance tasks such as replacing components.

Be sure to also inform users of the following:

- ***Never use alkali- or acid-based solvents such as rust cleaners. If those solvents are used the chain might break and cause serious injury.***
- ***Clean the chain with an appropriate chain cleaner regularly. Intervals between maintenance depend on the use and riding circumstances.***
- Check that the wheels are fastened securely before riding the bicycle. You may fall or collide and be seriously injured.
- Check the chain for any damage (deformation or cracking), skipping, or other abnormalities such as unintended gear shifting. The chain may break, and you may fall.
- Do not disassemble or modify the product. This may cause the product to not operate correctly, and you may suddenly fall and be seriously injured.

■ Motor Unit

- Never place your foot on the motor unit. This may cause the product to not operate correctly, and you may suddenly fall and be seriously injured.

■ Brake

- Because each bicycle may handle slightly differently depending on the model, be sure to learn the proper braking technique (including brake lever pressure and bicycle control characteristics) and operation of your bicycle. Improper use of your bicycle's brake system may result in a loss of control, which could lead to serious injury due to a fall or collision.
- Do not apply the front brake too strongly. If you do so, the front wheel may lock and the bicycle may fall forward, and serious injury may result.
- Because the required braking distance will be longer during wet weather, reduce your speed and apply the brakes early and gently. You may fall or collide and be seriously injured.
- A wet road surface may cause tires to lose traction; therefore, to avoid this, reduce your speed and apply the brakes early and gently. If the tires lose traction, it may result in serious injury due to a fall or collision.

For Installation to the Bicycle, and Maintenance:

- When installing the hub to the frame, be sure to install the correct non-turn washers to the left and right sides, and securely tighten the hub nuts to the specified torques. If the non-turn washer is installed only on one side or the hub nut is not fully tightened, the non-turn washer may come off, causing the hub axle and the motor unit to turn, which in turn may cause the electric wire to be disconnected or damage the motor unit.
- Assemble the wheel with 3x or 4x lacing, and do not spoke the wheel radially. Otherwise, the spokes or the wheel may get damaged, or noise may occur when braking.

■ Disc brake

- Keep your fingers away from rotating disc brake rotors. Disc brake rotors are sharp enough to severely injure your fingers if caught within the openings of a disc brake rotor.

- Do not touch the calipers or disc brake rotor while riding or immediately after dismounting from the bicycle. The calipers and disc brake rotor will become hot when the brakes are operated, so you may get burned if you touch them.
- Do not allow any oil or grease to get onto the disc brake rotor and brake pads. Riding the bicycle with oil or grease on the disc brake rotor and brake pads may prevent the brakes from operating and result in serious injury due to a fall or collision.

- Check the thickness of the brake pads and do not use them if they have a thickness of 0.5 mm or less. Doing so may prevent the brakes from operating and result in serious injury due to a fall or collision.

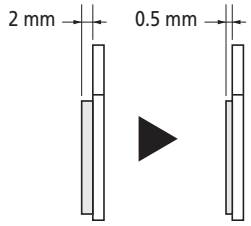

- Do not use the disc brake rotor if it is cracked or deformed. The disc brake rotor may break, and result in serious injury due to a fall or collision.
- Do not use the disc brake rotor if its thickness is 1.5 mm or less. Also do not use it if the aluminum surface becomes visible. The disc brake rotor may break, and result in serious injury due to a fall or collision.

■ Coaster brake

- Do not touch the coaster brake while riding or immediately after dismounting from the bicycle. The coaster brake will become hot when the brakes are operated, so you may get burned if you touch them.

■ Coaster brake hub

- When using a reversed rear dropout, use a chain adjuster to remove excess slack from the chain.

⚠ CAUTION

Be sure to also inform users of the following:

■ Disc brake

- To optimize the performance of the brake pads and disc brake rotor, perform the bed-in procedure as explained in the steps below:
  1. Ride your bicycle in a flat and safe area without obstacles and accelerate to a moderate speed.
  2. Operate the brake lever until you slow down to walking speed.
     Perform this operation carefully with only one brake lever at a time. Always operate your brake lever with moderation, especially when you bed in the front brake.
  3. Repeat steps 1 and 2 for at least 20 times for both the front and rear brakes.
     While repeating the process, the brake force will increase.

■ Coaster brake

- Do not continuously apply the brakes when riding down long slopes. This will cause the internal brake parts to become very hot, weakening braking performance, as well as causing a reduction in the amount of brake grease inside the brake, which can lead to problems such as abnormally sudden braking.
- Perform the bed-in procedure and check that the braking force of the coaster brake is correct.

■ Roller brake

- When the brake is used frequently, do not touch the area around the brake for at least 30 minutes after riding the bicycle. The area around the brake may become hot.

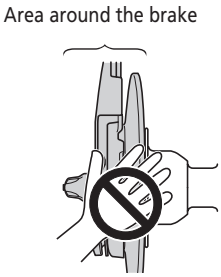

- Do not continuously apply the brakes when riding down long slopes. Doing so will cause the internal brake parts to become very hot, weakening braking performance, as well as causing a reduction in the amount of brake grease inside the brake, which can lead to problems such as abnormally sudden braking.
- The brake unit and front hub unit should never be disassembled. If it is disassembled, it may no longer work properly.

NOTICE

Be sure to also inform users of the following:

- Do not keep connecting and disconnecting the small waterproof connector. Doing so may impair the waterproofing.
- Be careful not to get water into the E-TUBE port.
- The components are designed to be fully waterproofed to withstand wet weather riding conditions; however, do not deliberately place them into water.
- Do not clean the bicycle with a high-pressure washer. If water gets into any of the components, operating problems or rusting may result.
- Handle the product carefully, and avoid subjecting it to any strong shocks.
- Do not use the thinners or harsh solvents to clean the products. Such substances may damage the surfaces.
- The most up-to-date information on software for this product is available on the SHIMANO website.
- The gears can be shifted while lightly pedaling, but on rare occasions the pawls and ratchet inside the hub may produce some noise afterwards as part of normal gear shifting operation. In addition, a loud sound may be temporarily emitted if the gears are shifted while strongly pedaling with E-BIKE, etc., but this is normal.
- The internal geared hub is not completely waterproof. Avoid using the hub in places where water might get inside and do not use high-pressure water to clean the hub, otherwise the internal mechanism may rust.
- All of the following occurrences are due to the internal gear-shifting structure and are not the failure of the internal components.

Phenomenon	Type of hub		Gear positions where phenomenon might occur
	For coaster brakes	For roller brakes/ V-BRAKE	
Noise occurs when the pedals rotate.	×	-	All gear positions except 1st
Noise occurs when the bicycle is pushed backward.	×	×	All gear positions except 1st
The hub has a built-in mechanism that supports gear shifting and when the mechanism operates during gear shifting, noise and vibrations occur.	×	×	All gear positions
Depending on gear position, gear-shifting may feel different.	×	×	All gear positions
Noise occurs when pedal rotation is stopped during riding.	×	-	All gear positions

- Products are not guaranteed against natural wear and deterioration from normal use and aging.
- For maximum performance we highly recommend SHIMANO lubricants and maintenance products.

PC linkage device

- Connect the PC linkage device directly to a computer, without using an intermediate device such as a USB hub.
- Do not ride the bicycle while the PC linkage device and cable are still connected to it.
- Do not connect two or more of the same units to the same connection point. If this is not done, the units may not operate correctly.
- Do not connect or disconnect units again while unit recognition is in progress or after recognition is complete. If this is not done, the units may not operate correctly.
  Check the procedures which are given in the user's manual for E-TUBE PROJECT when connecting and disconnecting units.
- The tightness of the PC link cable will tend to drop after repeated connections and disconnections. If this happens, replace the cable.
- Do not connect two or more PC linkage device at the same time. If two or more PC linkage device units are connected, they will not operate correctly. In addition, the PC may need to be restarted if operating errors occur.
- PC linkage devices cannot be used while the charger is connected.

For Installation to the Bicycle, and Maintenance:

- Be sure to attach dummy plugs to any unused E-TUBE ports.
- Be sure to use SHIMANO original tool TL-EW02 to remove the electric wires.
- The motors of the motor unit cannot be repaired.
- Contact SHIMANO for information regarding the shipment of the battery charger to South Korea and Malaysia.
- The chainrings and sprockets should be periodically washed with a neutral detergent. In addition, cleaning the chain with neutral detergent and lubricating it can be an effective way of extending the life of the chainrings, sprockets, and the chain.
- If the chain keeps skipping during use, replace the chainrings, sprockets, and the chain.

■Internal geared hub

- In order to maintain proper performance, it is recommended that you lubricate the internal unit after riding 1,000 km from the start of use, then after about once every year (or once about every 2,000 km if the bicycle is used very frequently). If the bicycle is used under harsh conditions, more frequent maintenance is required. Also, it is recommended to use SHIMANO internal geared hub grease or a lubrication kit for the maintenance. If SHIMANO grease or a SHIMANO lubrication kit is not used, problems such as a malfunction in the shifting unit may occur.

■Coaster brake specifications

- If the wheels are not rotating smoothly, you need to replace or grease the brake shoes.

■Electric wires

- There are two types of electric wire: the EW-SD300 and the EW-SD50. The supported electric wire differs according to the model. Check the component specifications on the SHIMANO product website in advance (https://productinfo.shimano.com/).
- The SHIMANO original tool used for installation/removal and the accessories used for wiring differ for the EW-SD300 and EW-SD50 as shown below. Be sure to use a compatible product.

Product name	Intended purpose	EW-SD50 type	EW-SD300 type
SHIMANO original tool	Connecting / disconnecting the electric wire	TL-EW02	TL-EW300
Dummy plug	Blocking empty ports	Y6VE15000	Y7HE30000
Cord clip	Binding the wiring and the outer casing / brake hose together	Y70H98040	EW-CL300-S (for shift outer casing) EW-CL300-M (for outer casing and brake hose)
Cord cover	Supporting / protecting the electric wire (external wiring)	SM-EWC2	EW-CC300
Grommets	Installing to the wire insertion hole of a frame that supports internal wiring	SM-GM01 SM-GM02	EW-GM300-S EW-GM300-M
Cord band	Supporting the electric wire (flat handlebar external wiring)	SM-EWE1	EW-CB300-S EW-CB300-M EW-CB300-L
Junction [A]	Gathering the wiring around the cockpit. Also has functions for changing the shift mode, etc.	EW-RS910 SM-EW90-A SM-EW90-B	-
Junction [B]	Conjoining the wiring inside and outside the frame	SM-JC41 SM-JC40 EW-JC200 EW-JC130	EW-JC304 EW-JC302
Conversion adapter	Connecting the EW-SD50 and EW-SD300	EW-AD305	

- Secure the electric wires with a zip tie so that they do not interfere with the chainrings, sprockets or tires.
- Do not remove the wire holders which are attached to the built-in type electric wires (EW-SD50-I/EW-SD300-I).
  The wire holders prevent the electric wires from moving inside the frame.

■EW-SD50

- When connecting the EW-SD50, use the method indicated in the figure. When connecting, push it straight in until you feel it click into place.

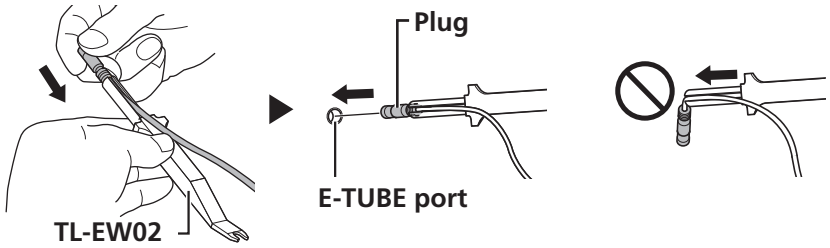

- When disconnecting the EW-SD50, lift the TL-EW02 straight up as indicated in (A), or use the TL-EW02 as a lever as indicated in (B).

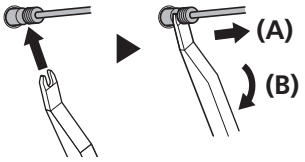

■EW-SD300

- When connecting or disconnecting the EW-SD300, use the method indicated in the figure. When connecting, push it straight in until you feel it click into place.

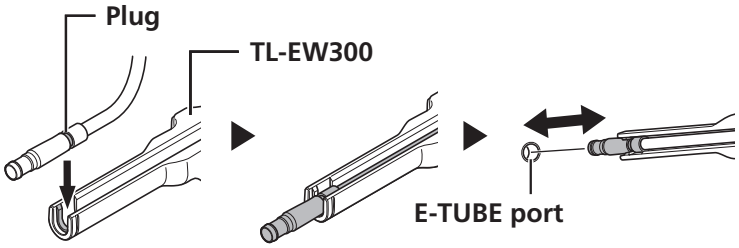

- When connecting the EW-SD300, the method below can also be used.

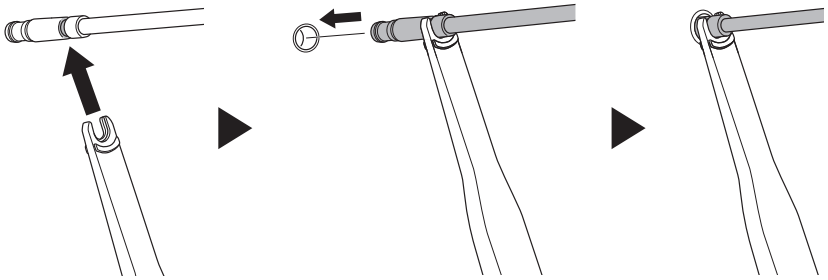

- When disconnecting the EW-SD300, the method below can also be used. Lift the TL-EW300 straight up as indicated in (A), or use the TL-EW300 as a lever as indicated in (B).

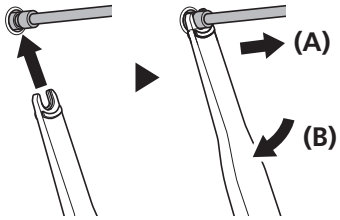

■Electric wire cover/cord cover

- If the electric wire cover/cord cover is deformed, the adhesive may weaken. To avoid deformation, store away from direct sunlight and hot and humid places.
- If there is dirt or oil on the frame, or if the surface is rough, the adhesive may weaken.
- Depending on the frame paint finish, the adhesive may weaken.
- The adhesive will strengthen 2 to 3 days after affixing the electric wire cover/cord cover.

- The strength of the adhesive is fairly weak to prevent the paint on the frame from being peeled off when removing the electric wire cover/cord cover, such as when replacing the electric wires. If the electric wire cover/cord cover is peeled off, replace it with a new one. When removing the electric wire cover/cord cover, do not peel it off too vigorously. Otherwise, the paint on the frame will peel off, too.

■Cord clip

- EW-CL300-S is marked with a groove in order to differentiate it from EW-CL300-M.

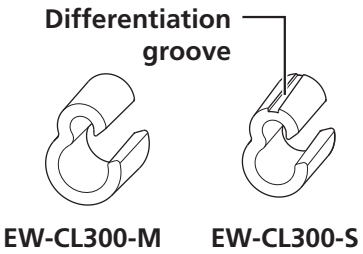

■Conversion adapter

- A conversion adapter (EW-AD305) is required to connect the EW-SD50 to a component with an E-TUBE port for the EW-SD300.

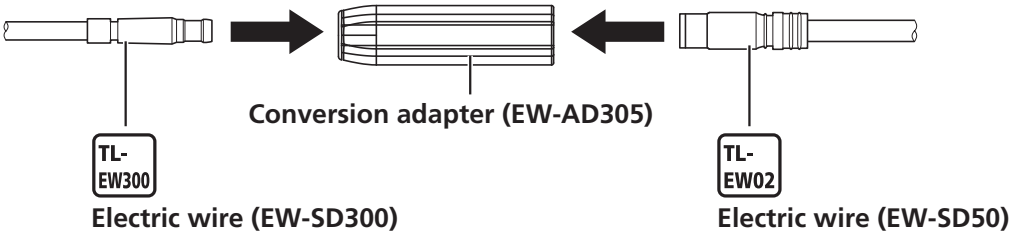

The actual product may differ from the illustration because this manual is intended mainly to explain the procedures for using the product.

For Installation to the Bicycle, and Maintenance:

■Notes on reinstalling and replacing components

- When the product is reassembled or replaced, it is automatically recognized by the system to allow operation according to the settings.
- If the system does not operate after reassembly and replacement, follow the system power reset procedure below to check the operation.
- If the component configuration changes or malfunction is observed, use the E-TUBE PROJECT software to update the firmware of each component to the latest version and perform a check again. Also make sure that the E-TUBE PROJECT software is the latest version. If the software is not the latest version, the component compatibility or the product functions may not be available.

■Internal geared hub specifications

- These chainring and sprocket sets are not compatible with chain tensioners.
- It is recommended that the front chainring have a tire size of 28 inches or shorter and be set so that the gear ratio is about 1.4 as shown in the table below.

Chainring	CS-C7000
34	24
38	27
42	30

• For information on gear ratios that can be used, refer to the table below.

Diameter of wheel		24 inch			26 inch			27 inch		
CS-C7000 number of teeth		30	27	24	30	27	24	30	27	24
Chainring number of teeth	30	-	-	-	-	-	-	-	-	-
	31	-	-	1.29	-	-	1.29	-	-	1.29
	32	-	-	1.33	-	-	1.33	-	-	1.33
	33	-	-	1.38	-	-	1.38	-	-	1.38
	34	-	-	1.42	-	-	1.42	-	-	1.42
	35	-	1.30	1.46	-	1.30	1.46	-	1.30	1.46
	36	-	1.33	1.50	-	1.33	1.50	-	1.33	1.50*
	37	-	1.37	1.54	-	1.37	1.54*	-	1.37	1.54*
	38	1.27	1.41	1.58	1.27	1.41	1.58*	1.27	1.41	-
	39	1.30	1.44	1.63	1.30	1.44	-	1.30	1.44	-
	40	1.33	1.48	1.67*	1.33	1.48	-	1.33	1.48*	-
	41	1.37	1.52	1.71*	1.37	1.52	-	1.37	1.52*	-
	42	1.40	1.56	1.75*	1.40	1.56*	-	1.40	1.56*	-
	43	1.43	1.59	-	1.43	1.59*	-	1.43	-	-
	44	1.47	1.63	-	1.47	-	-	1.47	-	-
	45	1.50	1.67*	-	1.50	-	-	1.50*	-	-

Diameter of wheel		700C			28 inch		
CS-C7000 number of teeth		30	27	24	30	27	24
Chainring number of teeth	30	-	-	-	-	-	-
	31	-	-	1.29	-	-	1.29
	32	-	-	1.33	-	-	1.33
	33	-	-	1.38	-	-	1.38
	34	-	-	1.42	-	-	1.42
	35	-	1.30	1.46*	-	1.30	1.46*
	36	-	1.33	1.50*	-	1.33	1.50*
	37	-	1.37	-	-	1.37	-
	38	1.27	1.41	-	1.27	1.41	-
	39	1.30	1.44*	-	1.30	1.44*	-
	40	1.33	1.48*	-	1.33	1.48*	-
	41	1.37	1.52*	-	1.37	-	-
	42	1.40	-	-	1.40	-	-
	43	1.43	-	-	1.43*	-	-
	44	1.47*	-	-	1.47*	-	-
	45	1.50*	-	-	1.50*	-	-

* Can be used except for with coaster brake specifications.
-: Cannot be used

■Coaster brake specifications

- Use a wheel with 3x or 4x lacing. Wheels with radial lacing cannot be used. Otherwise, the spokes or the wheel may get damaged, or noise may occur when braking.
- If the wheel becomes stiff and difficult to turn, you should replace the brake shoes or lubricate with grease.
- Use only the specified grease for the brake shoes and when using a lubrication kit, remove the brake shoes to avoid contact with the oil.

■MU-UR520

- For the flow of overall wiring to the bicycle and installation work, refer to the LIFESTYLE Di2 General Guide (https://si.shimano.com/dm/LAGN001/).
- To use this product with wireless gear shifting, it must be paired with a shifting switch. Refer to "Pairing for wireless gear shifting (MU-UR520)".
- For information on wireless connection with other devices, refer to "Wireless function (MU-UR520)".
- Compatibility with SHIMANO STEPS will be provided in a future firmware update.

Be sure to also inform users of the following:

■Connection and communication with PC

- A PC linkage device can be used to connect a PC to the bicycle (system or components), and E-TUBE PROJECT Professional can be used to carry out tasks such as customizing single components or the whole system and updating firmware.
  If your versions of E-TUBE PROJECT Professional and firmware for each component are not up to date there could be problems operating the bicycle. Check the software version and update to the latest version.

■Connection and communication with smartphone

- E-TUBE PROJECT Professional can be used to carry out tasks such as customizing single components or the whole system and updating firmware, after connecting the bicycle (system or components) to a smartphone via Bluetooth® LE.
- Disconnect the Bluetooth® LE connection when not using E-TUBE PROJECT Professional.
  Using a system information display without disconnecting the Bluetooth® LE connection could increase battery consumption.

About compatibility with E-TUBE PROJECT

- For details on compatibility with E-TUBE PROJECT, refer to the following website.
  (https://bike.shimano.com/e-tube/project/compatibility.html#guide_list)

LIST OF TOOLS TO BE USED

LIST OF TOOLS TO BE USED

The following tools are needed for installation, adjustment, and maintenance purposes.

Tool		Tool		Tool	
15mm	15 mm spanner		Adjustable wrench	TL-LR10	TL-LR10
17mm	17 mm spanner	TL-EW02	TL-EW02	TL-EW300	TL-EW300
TL-SGE1	TL-SGE1 (Tools for mounting motor unit to the hub)				

INSTALLATION

INSTALLATION

■ Installation of sprocket to the hub

Refer to the internal geared hub-compatible SHIMANO STEPS dealer's manual for information on installing parts not listed in this document.

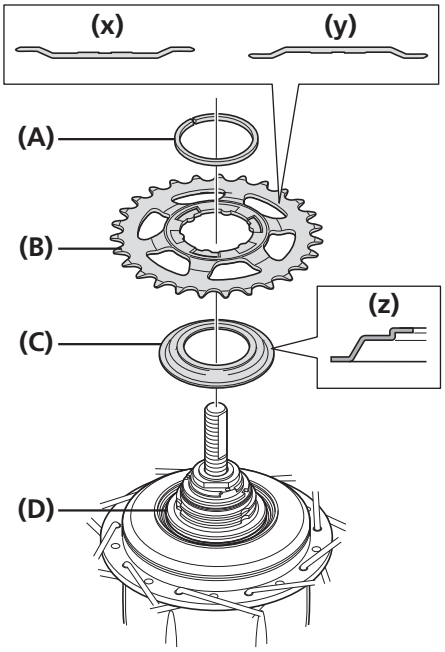

Place right-hand dust cap onto the driver on the right side of the hub body.

Next, install the sprocket and secure it in place with the snap ring.

(x) Outward assembling: MU-UR520 / MU-UR510 only

(y) Inward assembling: Compatible with all motor units

(z) Note the direction

(A) Snap ring
(B) Sprocket
(C) Right-hand dust cap C
(D) Driver

NOTICE

- Only SM-C7050 and CS-C7000 can be used with SG-C7050.
- If using the MU-UR520 / MU-UR510 motor unit, outward assembly of the sprocket is possible.

■ Installation of the motor unit to the hub

Unless otherwise noted, MU-UR500 is used as an example for this explanation.
Step 2 describes the procedure for using a shift switch to place the mechanism of the motor unit in the initial position before installation, which is required if the motor unit is not in the factory default setting (during maintenance, etc.).
Refer to "CONNECTION OF THE ELECTRIC WIRES" to place the motor unit in a state where operations can be performed. For the MU-UR520, refer to "Pairing for wireless gear shifting (MU-UR520)" to pair it with a shift switch in advance, as required.

1

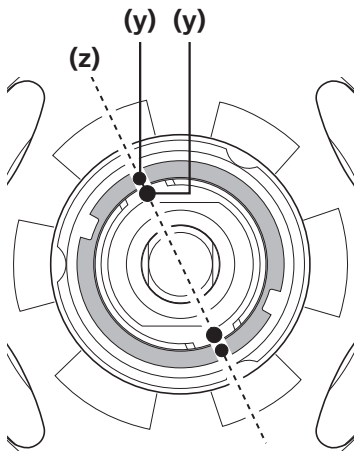

Check that the two • marks (red) on the right side of the hub body are aligned.

(y) • mark (red)

(z) Should be aligned

TECH TIPS

If the two • marks (red) are not aligned, align the two • marks (red).

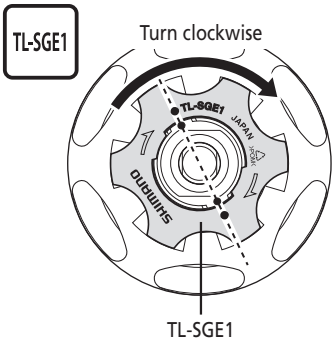

To be continued on next page

2

Make sure that the two protrusions on the inside of the motor unit are at the initial positions.

- Confirm that the marks and protrusions are aligned.

MU-UR500

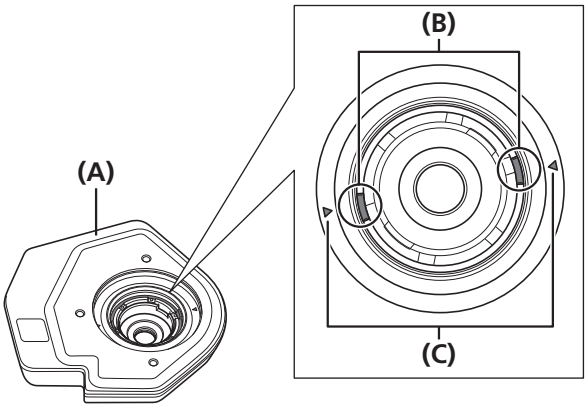

MU-UR520 / U-UR510

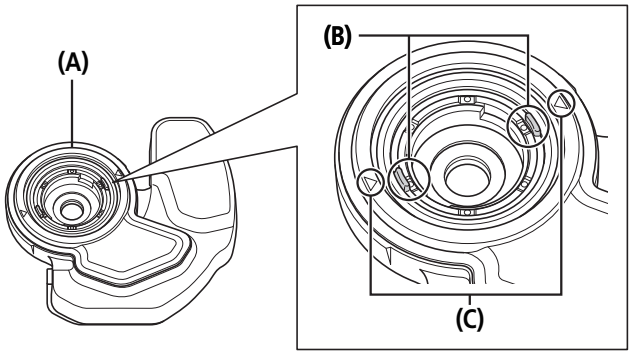

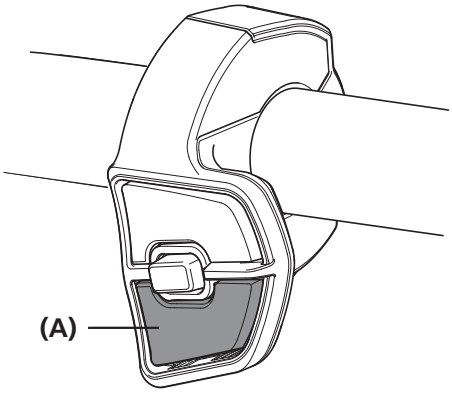

* If you are using a shifting switch other than the above, press the equivalent switch (on the shift down side) four or more times.

(A) Inside motor unit
(B) Protrusion
(C) Mark

NOTICE

Check that the rubber seal is attached. If the rubber seal is not attached, attach as shown in the illustration.

MU-UR500 **MU-UR520** **MU-UR510**

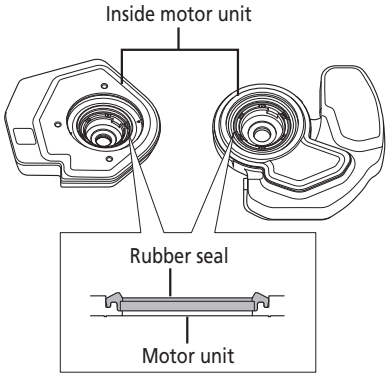

(A) Shifting switch

NOTICE

The motor unit is set at the initial position when it is shipped; therefore, install it without changing the position. If the motor unit may not be at the initial position, push the shifting switch four or more times to move the protrusions on the motor unit counterclockwise (check from the inside of the motor unit). (Check the shifting up and down of the shifting switch in advance as it may have been switched by customization.) If the motor unit is installed off the initial position, some gears may become unavailable and the hub or the motor unit may be damaged.

To be continued on next page

Installation of the motor unit to the hub

3

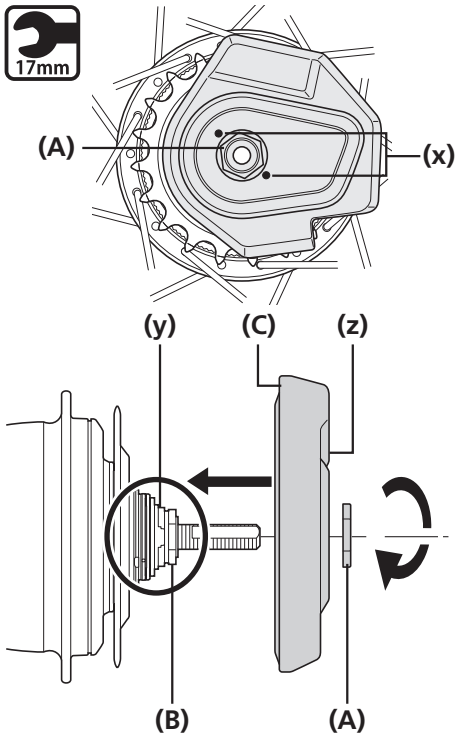

Install the motor unit to the hub so that the • mark **(x)** on the motor unit is aligned with the • mark **(y)** on the hub lock spacer.

After this, gently push the motor unit while turning it slowly to set it correctly until it stops turning on the hub axle.

Next, secure the motor unit by tightening the L lock nut.

(x) motor unit • mark (silver)

(y) hub lock spacer • mark (red)
This is the mark for which the position was aligned in step 1.

(z) Outer side

(A) L lock nut
(B) Right-hand lock nut
(C) Motor unit

Tightening torque	
17mm	6 - 10 N·m

NOTICE

Check that the guide of right-hand lock nut is seated securely in the guide hole on the front of the motor unit.

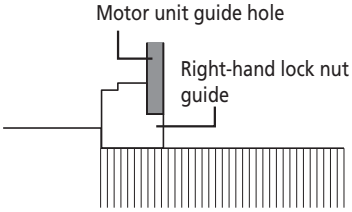

■ Installation of the disc brake rotor

Install the disc brake rotor as shown in the illustration.

Center lock type

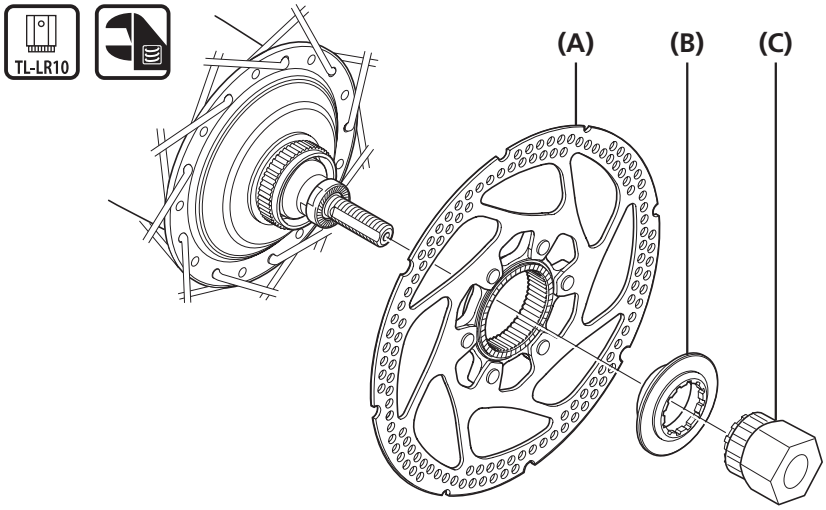

(A) Disc brake rotor
(B) Disc brake rotor installation ring
(C) TL-LR10

Tightening torque	
TL-LR10	40 N·m

■ Installation of the hub to the frame

Non-turn washer

Use non-turn washers to secure the internal geared hub and motor unit to the frame.
Non-turn washers are classified with a mark and main body color for easy identification. There are left and right types, and the right type is normally used on the chain side.
Refer to the following to select the non-turn washer based on the shape of the motor unit and rear dropout to use.

MU-UR500

- When the rear dropout is the reversed type

Rear dropout	Installation angle of non-turn washer and motor unit		
	5R (yellow) / 5L (brown)	6R (silver) / 6L (white)	7R (black) / 7L (gray)
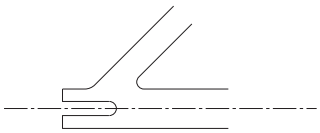	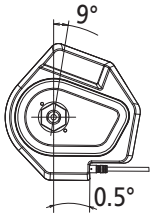	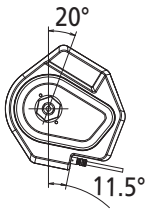	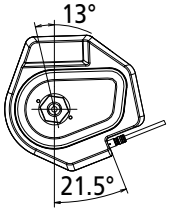

Installation of the hub to the frame

- When the rear dropout is the standard type

Rear dropout	Installation angle of non-turn washer and motor unit		
	5R (yellow) / 5L (brown)	6R (silver) / 6L (white)	7R (black) / 7L (gray)
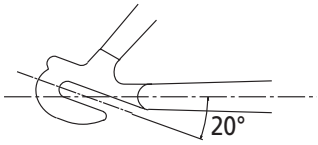	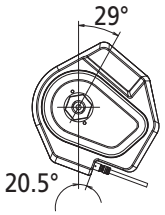	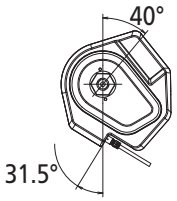	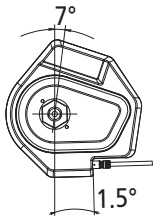
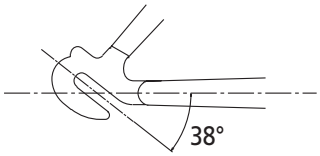	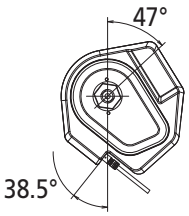	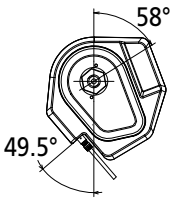	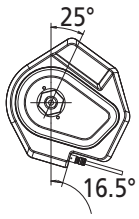

- When the rear dropout is the straight drop type

Rear dropout	Installation angle of non-turn washer and motor unit
	8R (blue) / 8L (green)
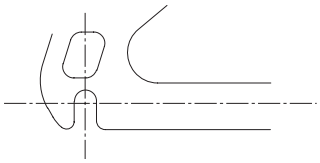	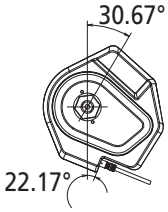
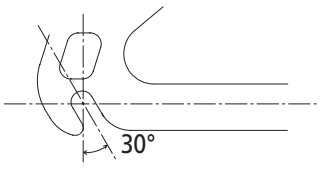	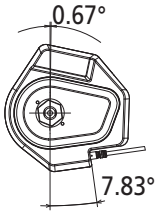

MU-UR520 / MU-UR510

- When the rear dropout is the standard type

Rear dropout	Installation angle of non-turn washer and motor unit
	6R (silver) / 6L (white)
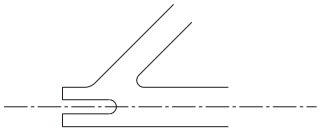	

Installation of the hub to the frame

- When the rear dropout is the reversed type

Rear dropout	Installation angle of non-turn washer and motor unit	Rear dropout shape	Installation angle of non-turn washer and motor unit
	5R (yellow) / 5L (brown)		7R (black) / 7L (gray)
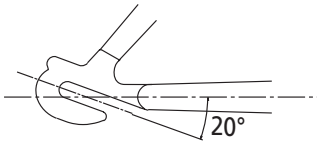		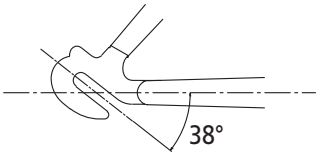	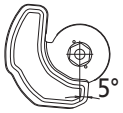

- When the rear dropout is the straight drop type

Rear dropout	Installation angle of non-turn washer and motor unit	Rear dropout shape	Installation angle of non-turn washer and motor unit
	8R (blue) / 8L (green)		9R (light green) / 9L (light brown)
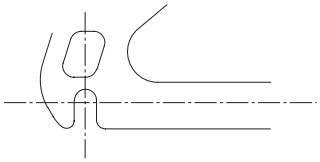		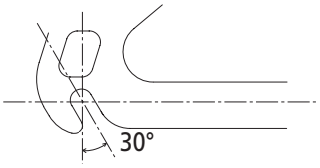	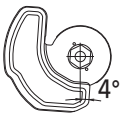

Installation methods

1 Mount the chain on the sprocket, then set the hub axle into the rear dropout.

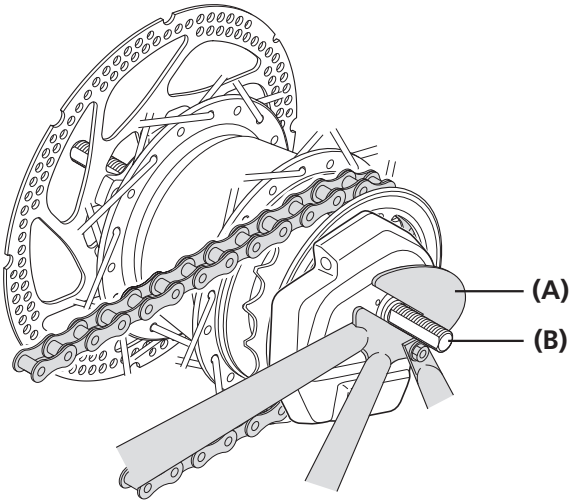

(A) Rear dropout
(B) Hub axle

To be continued on next page

Installation of the hub to the frame

2

Place non-turn washers and onto the right and left sides of the hub axle.

At this time, turn the motor unit so that the protrusion of the non-turn washers fit into the grooves of the rear dropouts and align the washers to be almost parallel to the chainstay.

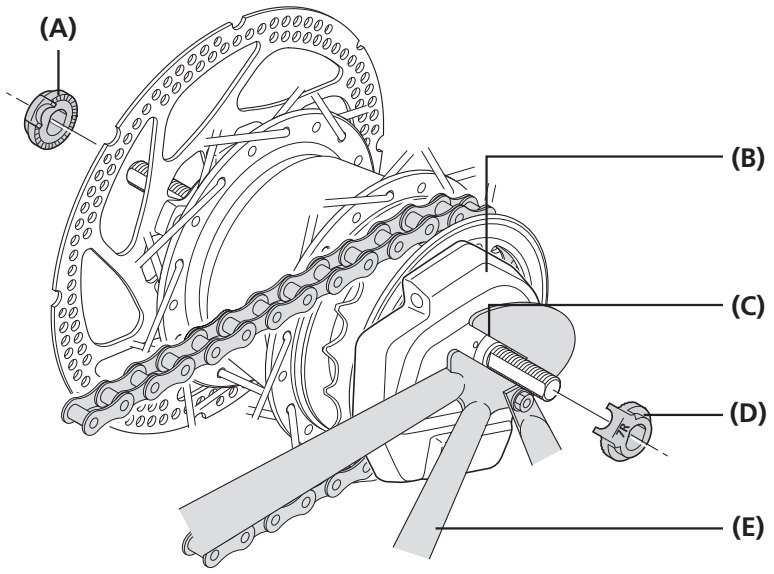

(A) Non-turn washer (for left-side use)
(B) Motor unit
(C) Rear dropout groove
(D) Non-turn washer (for right-side use)
(E) Chainstay

TECH TIPS

- Install the non-turn washer with its protrusion part aligned with the straight part of the rear dropout.

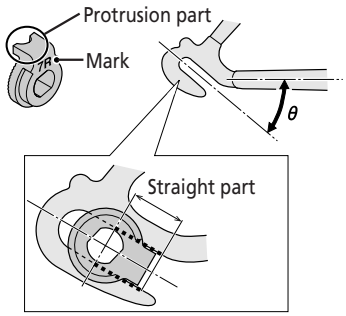

- Install the non-turn washer so that the protrusion fits securely in the rear dropout groove at the front and back sides of the hub axle.

3

Take up slack in the chain and secure the wheel to the frame with the hub nut.

15mm

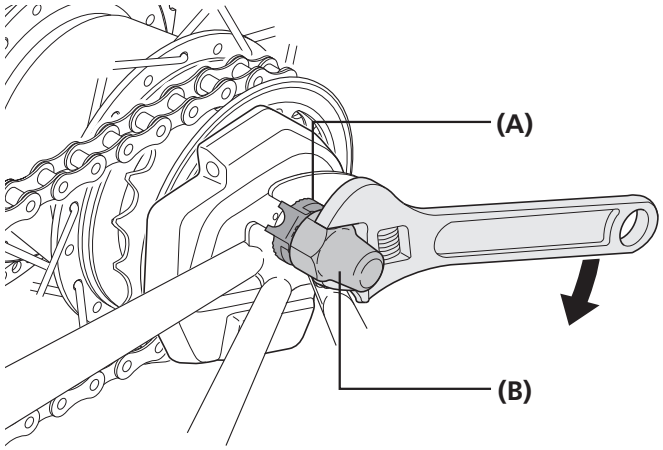

(A) Non-turn washer
(B) Hub nut

Tightening torque	
15mm	30 - 45 N·m

NOTICE

- When installing parts such as a mudguard stay to the hub axle, install them in the order shown in the figure.

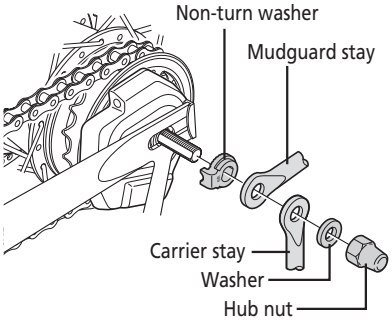

Installation of the hub to the frame

For coaster brakes

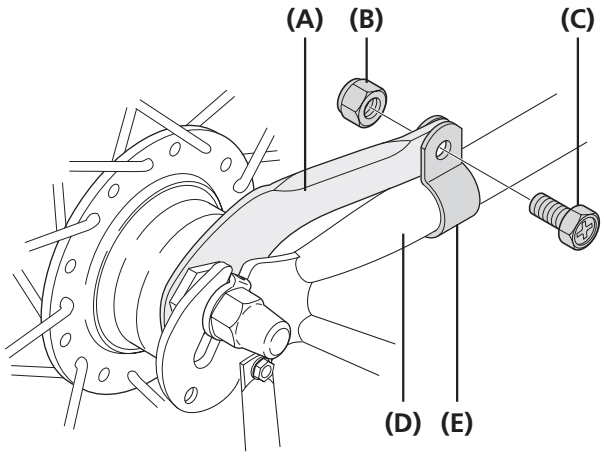

(A) Brake arm
(B) Clip nut
(C) Clip bolt
(D) Chainstay
(E) Arm clip

CONNECTION OF THE ELECTRIC WIRES

CONNECTION OF THE ELECTRIC WIRES

Refer to the internal geared hub-compatible SHIMANO STEPS dealer's manual when connecting electric wires to parts not listed in this document.

NOTICE

Information on the electric wire and the SHIMANO original tool is described in "NOTICE" in "TO ENSURE SAFETY". Be sure to refer to it before starting the work.

Connection to motor unit

MU-UR520

1

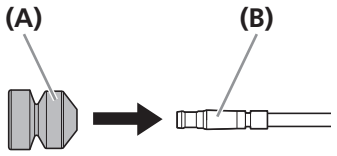

Prepare the electric wire to connect to the drive unit.
Pass the rubber cover included with the MU-UR520 from the tip of the electric wire on the motor unit side.

(A) Rubber cover
(B) Electric wire

NOTICE

- When connecting to a BOSCH Smart System drive unit, use the EW-PS300 instead of an electric wire. For details, refer to the EW-PS300 Dealer's Manual.

2

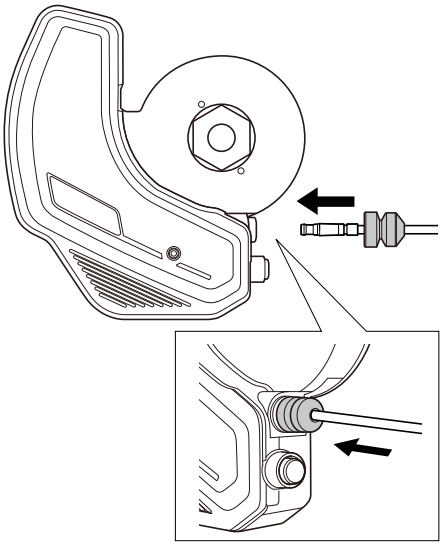

Connect the electric wire to the E-TUBE port of the motor unit, then move the rubber cover and connect it to the E-TUBE port.

3

After connecting the electric wires to all of the components, install the battery and check the operation.

Check that gear shifting of the rear can be performed properly by operating the shifting switch.

Connection to motor unit

MU-UR510 / MU-UR500

1

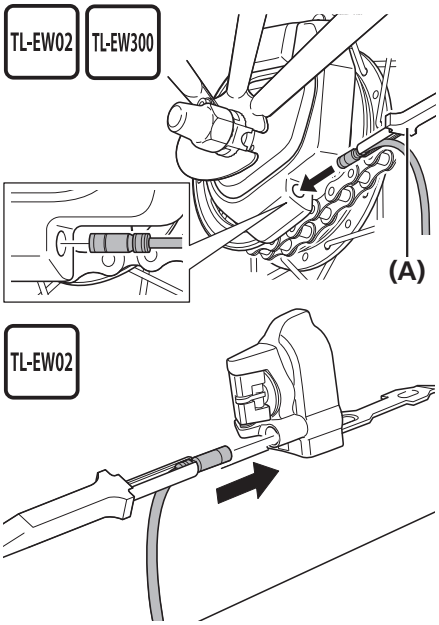

Connect the electric wires to the motor unit and the battery mount.

(A) TL-EW02 (MU-UR500)
TL-EW300 (MU-UR510)

2

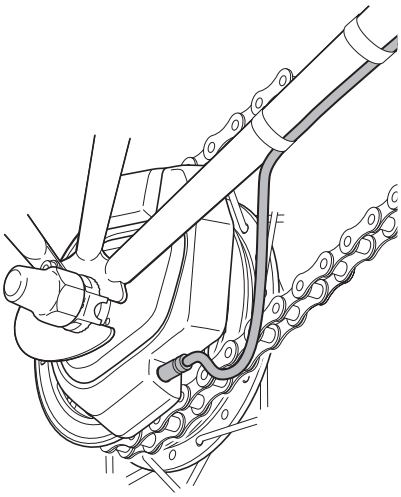

Temporarily secure the electric wire along the frame with tape, and connect it to junction [B].

NOTICE

- When routing the electric wire to the motor unit, be sure to install it to the bottom of the chainstay to avoid any interference between the cable and the chain.
- If the motor unit is the MU-UR510 (EW-SD300 type), use the conversion adapter (EW-AD305) to connect the EW-SD50 and EW-SD300, and connect them to junction [B].

To be continued on next page

Connection to motor unit

3

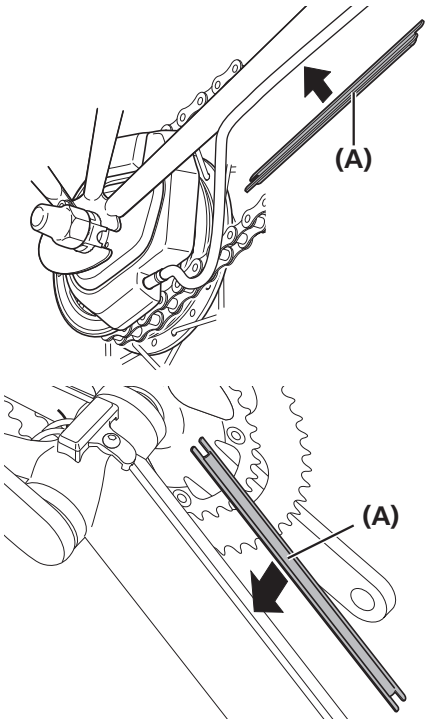

Install the electric wire cover/cord cover onto the frame.

In order to make sure that the electric wire cover/cord cover is securely attached, clean the frame with alcohol or some other cleaning agent to remove any grease or other substances before installing the cover.

Place the electric wire cover/cord cover over the electric wires, then attach it to the frame.

(A) Electric wire cover (EW-SD50 type)
SM-EWC2
Cord cover (EW-SD300 type)
EW-CC300

4

After connecting the electric wires to all of the components, install the battery and check the operation.

Check that gear-shifting of the rear can be performed properly by operating the shifting switch.

Disconnection of the electric wires

Disconnection of the electric wires

NOTICE

- Do not keep connecting and disconnecting the small waterproof connector. The waterproof section or the connecting section may become worn or deformed, and the function may be affected.
- For the MU-UR520, move the rubber cover, then remove the electric wire.

Motor unit

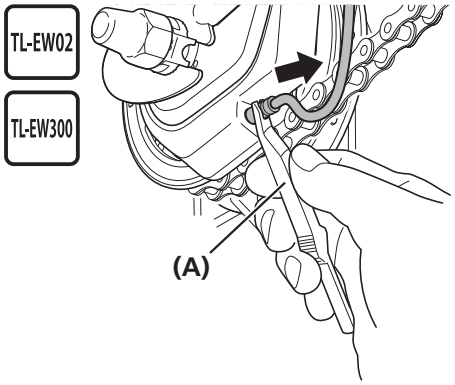

Use the wide end of the SHIMANO original tool to disconnect the electric wire on the motor unit side.

(A) TL-EW02 (MU-UR500)
TL-EW300 (MU-UR520 / MU-UR510)

CONNECTION AND COMMUNICATION WITH DEVICES

CONNECTION AND COMMUNICATION WITH DEVICES

■ Wireless function (MU-UR520)

The MU-UR520 supports Bluetooth® LE and ANT®, and can send information such as the current gear position to an external device.

Connection method

ANT® connection	Turn the power of the bicycle ON to receive communication. Switch the external device to connection mode then connect it.
Bluetooth® LE connection	Be sure to switch the external device to connection mode ahead of time. This product receives communication in the following cases: For 30 seconds after the power of the bicycle is turned ON For 30 seconds after the function button is pressed

TECH TIPS

The LED flashes blue when the product is ready to connect with the external device and receive communication.

E-TUBE application

E-TUBE PROJECT Cyclist can be used if a Bluetooth® LE connection is established between the MU-UR520 and a smartphone. E-TUBE RIDE can be used to check traveling data on a smartphone connected over Bluetooth®. For information on how to install E-TUBE PROJECT Cyclist, check the support website (https://bike.shimano.com/e-tube/project.html).
SHIMANO STEPS enables the entire bicycle to be connected with E-TUBE PROJECT Professional. For details, refer to the SHIMANO STEPS Cycle Computer and Switch Unit Parts Dealer's Manual (Gen.2) (https://si.shimano.com/dm/SCSW002/).

■ Pairing for wireless gear shifting (MU-UR520)

To use the MU-UR520 with wireless gear shifting, it must be paired with a shift switch.
Pairing can be performed by operating the shift switch and MU-UR520 or by using E-TUBE PROJECT.
The method for pairing by operating the shift switch and MU-UR520 is described here.

TECH TIPS

- The MU-UR520 can be paired with only one shift switch at a time. To pair it with another shift switch, the existing pairing must be canceled. Pairing can be canceled from E-TUBE PROJECT.
- For details on pairing using E-TUBE PROJECT, refer to the following:
  * E-TUBE PROJECT Professional User's Manual (https://si.shimano.com/um/7J4WA/PAIRING_PROCESS)
  * E-TUBE PROJECT Cyclist User's Manual (https://si.shimano.com/um/7J4MA/PAIRING_PROCESS)

1 Turn the power of the bicycle ON.

Refer to the manual describing the power operations of the E-BIKE, such as the SHIMANO STEPS user's manual.

To be continued on next page

Pairing for wireless gear shifting (MU-UR520)

2

Press and hold X and Y together on the shift switch until the LED of the motor unit lights up blue.

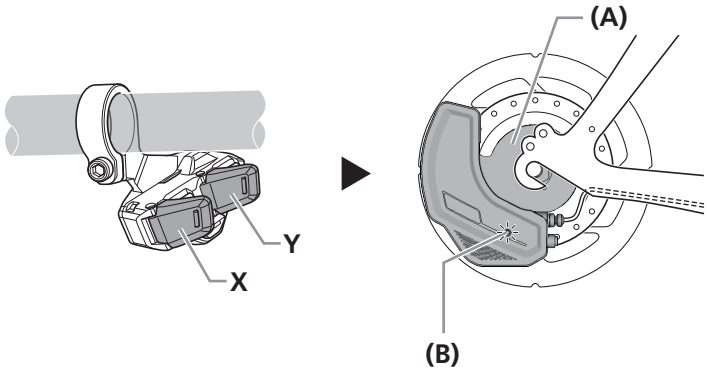

(A) Motor unit
(B) LED (lights up blue)

TECH TIPS

The location and position of X and Y differ according to the shift switch. Refer to the user's manual of the shift switch for details.

3

Press and hold X and Y together on the shift switch again while the LED of the motor unit is blue.
Remove your fingers from X and Y after confirming that the LED of the motor unit quickly flashes blue then returns to steady blue.

4

Press the function button of the motor unit.
When the LED lights up green several times, pairing is complete.

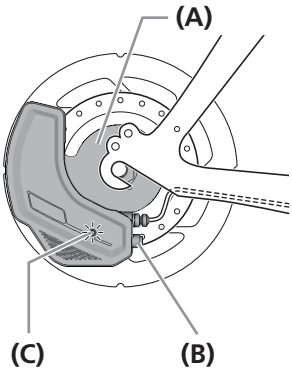

(A) Motor unit
(B) Function button
(C) LED (lights up green several times)

MAINTENANCE

MAINTENANCE

■ Adjusting the motor unit

Performing adjustment from E-TUBE PROJECT Professional

For the latest information on E-TUBE PROJECT Professional, check https://bike.shimano.com/e-tube/project.html.

⚠ CAUTION

- Improper adjustment may cause gear engagement skipping, resulting in an accidental fall.
- Perform adjustment only when you have an unusual feel during shifting. If there is no problem with shifting, unnecessary adjustment may worsen shifting performance.

1 Download the latest version of E-TUBE PROJECT Professional from the support website.
(**https://bike.shimano.com/e-tube/project.html**)

2 Use the SM-PCE02 to connect the bicycle (system or component) to the PC.

3 Perform adjustment in E-TUBE PROJECT Professional.
For the adjustment procedure, refer to the user's manual for E-TUBE PROJECT Professional.
(https://si.shimano.com/um/7J4WA/gearbox_adjustment)

4 Finally, ride the bicycle to check whether there is no problem.

Adjusting the motor unit

Performing adjustment from E-TUBE PROJECT Cyclist

For the latest information on E-TUBE PROJECT Cyclist, check https://bike.shimano.com/e-tube/project.html.

CAUTION

- Improper adjustment may cause gear engagement skipping, resulting in an accidental fall.
- Perform adjustment only when you have an unusual feel during shifting. If there is no problem with shifting, unnecessary adjustment may worsen shifting performance.

1 Download E-TUBE PROJECT Cyclist.

2 Connect with the smartphone via Bluetooth® LE.

3 Perform adjustment in E-TUBE PROJECT Cyclist.
For the adjustment procedure, refer to the user's manual for E-TUBE PROJECT Cyclist.
(https://si.shimano.com/um/7J4MA/gearbox_adjustment)

4 Finally, ride the bicycle to check whether there is no problem.

For E-BIKE

If a cycle computer is installed to the bicycle with SHIMANO STEPS, adjustment can be performed from the cycle computer. For details, refer to the SHIMANO STEPS Cycle Computer and Switch Unit Parts Dealer's Manual (Gen.2) (https://si.shimano.com/dm/SCSW002/).
If a cycle computer is not installed to the bicycle with SHIMANO STEPS or a cycle computer is connected to a drive unit from another manufacturer, refer to "Performing adjustment from E-TUBE PROJECT Professional" or "Performing adjustment from E-TUBE PROJECT Cyclist", depending on the specifications of the component you are using.

▶▶ Oil maintenance of the internal assembly (oil maintenance kit: Y00298010)

■ Oil maintenance of the internal assembly (oil maintenance kit: Y00298010)

Content of kit: WB maintenance oil, Container

General Safety Information

⚠ WARNING

- When lubricating the internal unit, be careful that no oil gets on the disc brake rotor, pads, on the rim when using rim brakes, etc.
  If oil gets on any of these parts, there is a danger that brake performance may be reduced.
  Take care of this problem according to the procedures in the brake instruction manual.
- Since there is a risk of explosion or fire, do not smoke, eat, or drink while using this oil. In addition, keep it away from ignition sources such as heat, sparks, open flames, or high temperatures and prevent it from catching fire due to static electricity sparks or other sparks.
- Use only outdoors or in a well-ventilated area. Inhalation of oil mist or vapors may cause nausea. Be careful to provide ventilation and use a respirator type mask.
  If mist or vapor is inhaled, go immediately to an area with fresh air. Cover up with a blanket. Stay warm and stable and seek professional medical advice.

Cautions regarding handling of WB maintenance oil:

- Use appropriate eye protection when handling, and avoid contact with eyes. In the event of eye contact, flush with fresh water and seek medical assistance immediately. Contact with eyes may result in irritation.
- Use gloves when handling. In the event of skin contact, wash well with soapy water. Contact with skin may cause a rash and discomfort.
- Do not drink. If it is drunk by mistake, do not induce vomiting; make the affected person drink 1 to 2 cups of water and seek medical assistance immediately.
  If the affected person loses consciousness, do not give the person anything by their mouth. If vomiting occurs naturally, tilt the body to prevent inhalation.
- After use, be sure to wash hands thoroughly.
- Keep the container sealed to prevent foreign objects and moisture from getting inside, and store it in a cool, dark area away from direct sunlight.
- Keep out of reach of children.
- Dispose of used oil, old oil, or oil used for cleaning in accordance with the method stipulated by the law.
- To maintain the product in good working order, lubricate the internal unit after the first 1,000 km from the start of use of the product, and once every year thereafter (after every 2,000 km if bicycle is ridden frequently).
- Do not use oil other than WB maintenance oil. Problems such as an oil leakage and gear shifting malfunction may occur.
- Disposal of used oil: Follow local county and/or state codes for disposal. Use caution when preparing the oil for disposal.
- Read this manual carefully, and keep it in a safe place for later reference.
- For the latest product safety data sheets, check the website https://si.shimano.com.

Oil maintenance of the internal assembly (oil maintenance kit: Y00298010)

1		Fill the container with maintenance oil to a height of 95 mm. **(z)** 95 mm
2		Immerse the internal unit in the oil from the left side until the oil reaches up to ring gear unit 1, as shown in the illustration. **(z)** Ring gear unit 1
3		Keep the internal unit immersed for approximately 90 seconds.
4		Remove the internal unit from the oil.
5		Let excess oil drain off for approximately 60 seconds.

To be continued on next page

▶▶ Oil maintenance of the internal assembly (oil maintenance kit: Y00298010)

6		Reassemble the hub.

NOTICE

After oil maintenance, it is recommended that you apply Grease (Y04130100) to the ball retainers, snap ring, brake shoe, and pinion gears.

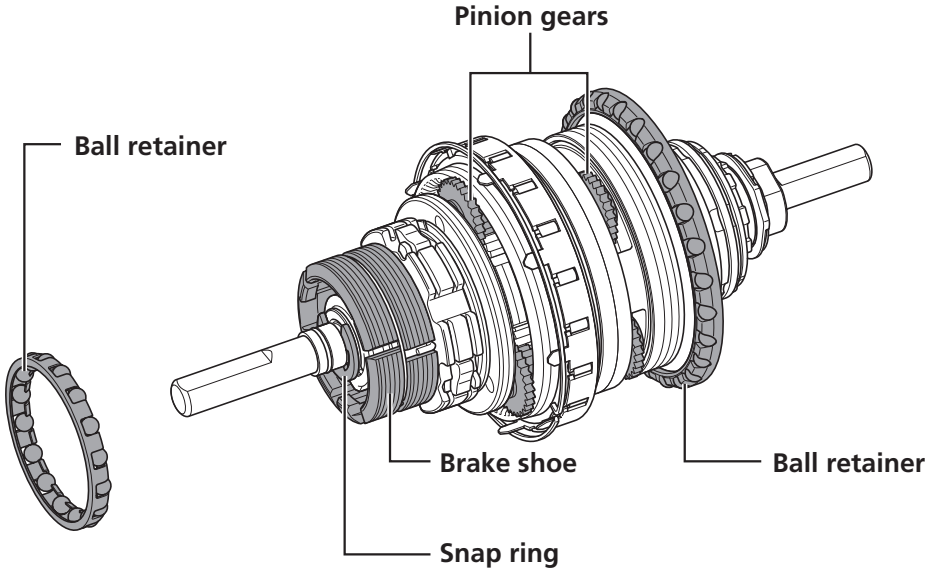

The illustration shows an example.

SHIMANO

SHIMANO NORTH AMERICA BICYCLE, INC.
One Holland, Irvine, California 92618, U.S.A. Phone: +1-949-951-5003

SHIMANO EUROPE B.V.
High Tech Campus 92, 5656 AG Eindhoven, The Netherlands Phone: +31-402-612222

SHIMANO INC.
3-77 Oimatsu-cho, Sakai-ku, Sakai City, Osaka 590-8577, Japan

Please note: specifications are subject to change for improvement without notice. (English)
© Mar. 2024 by SHIMANO INC. ITP