DEORE XT Freehub (8/9/10-Speed) for Disc Brake

FH-M785-S Silver Version
FH-M785-L Black Version

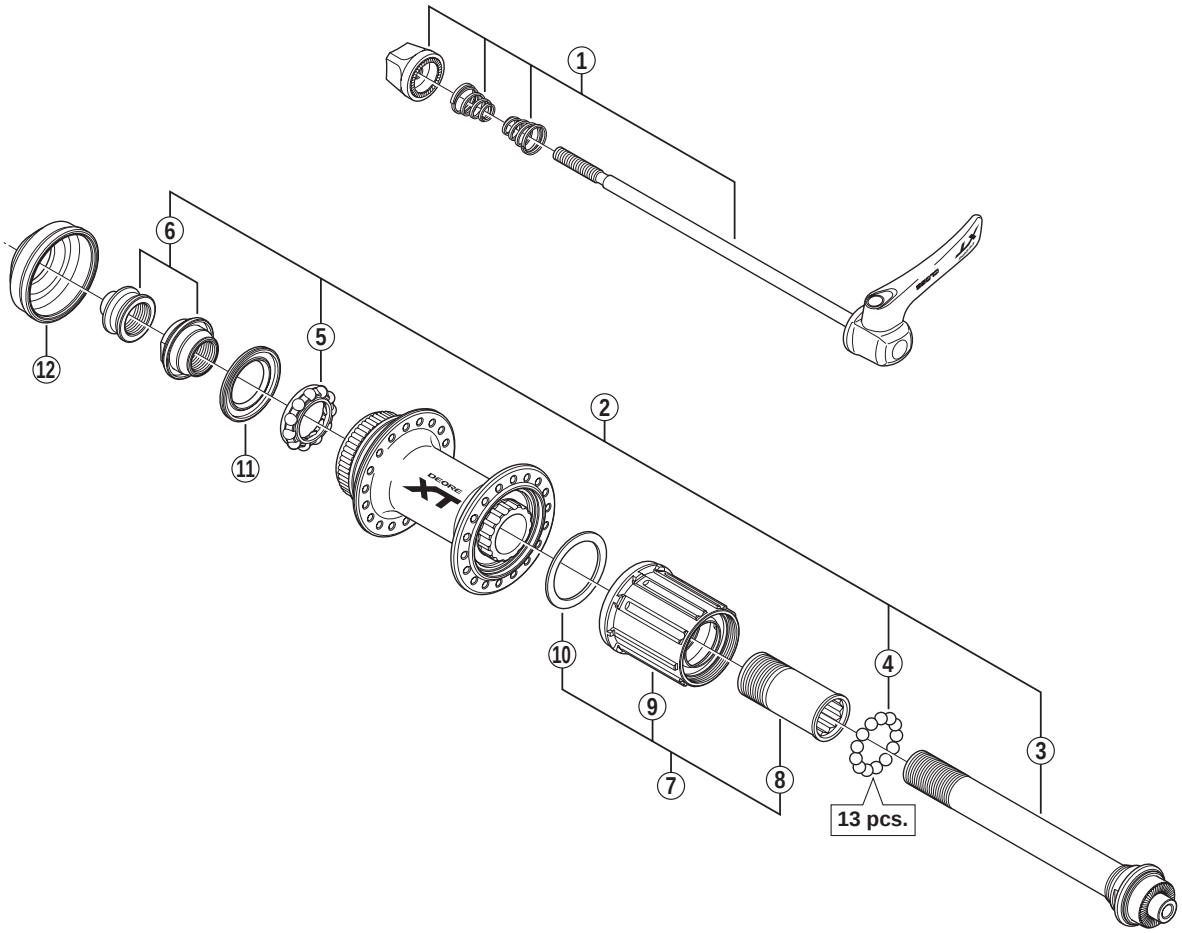

• Over Lock Nut Dimension: 135 mm (5-5/16")

ITEM NO.	SHIMANO CODE NO.	DESCRIPTION	INTERCHANGE-ABILITY FH-M985	INTERCHANGE-ABILITY FH-M775
1	**Y3TG98010**	Complete Quick Release 168 mm (6-5/8")	B	B
	Y3TG98020	Complete Quick Release 173 mm (6-13/16")	B	B
2	**Y3TG98030**	Complete Hub Axle		B
3	**Y3CZ98020**	Hub Axle Unit		B
4	**Y00091210**	Steel Ball (3/16") 20 pcs.	B	A
5	**Y26J98030**	Ball Retainer (3/16")		A
6	**Y3TG98040**	Left Hand Lock Nut (M14) & Cone (M14) w/Dust Cover		B
7	**Y3CZ98040**	Complete Freewheel Body w/Body Fixing Bolt	B	A
8	**Y3CZ18000**	Body Fixing Bolt	B	A
9	**Y3CZ98050**	Freewheel Body Unit	B	A
10	**Y3CZ12000**	Freewheel Body Washer	B	A
11	**Y26D10000**	Seal Ring	A	A
12	**Y25Y06000**	Rotor Mount Cover		A

A: Same parts.
B: Parts are usable, but differ in materirals, appearance, finish, size, etc.
Absence of mark indicates non-interchangeability.

Mar.-2011-3174

© Shimano Inc. I

Specifications are subject to change without notice.

SHIMANO